EMERSON™
Industrial Automation



Unimotor hd

Product Data

High dynamic AC brushless servo motor
for Control Techniques drives
055 to 115 Frames
0.72 Nm to 18.8 Nm
(56.4 Nm peak)

CONTROL TECHNIQUES

EMERSON
Industrial Automation

Compact servo motor for demanding applications

Unimotor is Control Techniques' new high dynamic brushless AC servo motor range, designed for operation with Digitax ST, Unidrive SP and Epsilon EP drives. Unimotor provides an exceptionally compact, low inertia solution for applications where very high torque is required during rapid acceleration and deceleration profiles. The Unimotor torque profile is matched to Digitax ST servo drives, providing up to 300% peak overload for maximum dynamic performance.



Engineering excellence, innovation and reliability

Unimotor has been developed by a dedicated team using our design process that prioritises product innovation, performance and reliability. This enables new ideas to be quickly evaluated, prototyped and tested using a suite of in-house development and modelling software tools. As a result Unimotor incorporates a number of unique performance enhancing design features with several patents pending. Unimotor "raises the bar" in terms of both performance and quality.

Key features

Unimotor is suitable for a wide range of industrial applications, due to its extensive features.

- Torque range: 0.72Nm to 18.8Nm
- High torque to inertia ratio for high dynamic performance
- Compact but powerful
- High energy dissipation brakes
- IP65 conformance: sealed against water spray and dust when mounted and connected
- Segmented stator design
- World class performance
- Supported by rigorous testing for performance and reliability
- Winding to suit 400V and 220V
- Rated speeds include 2000rpm, 3000rpm, 4000rpm and 6000rpm
- Larger shafts to increase torsional rigidity

The ultimate motor and drive combinations

Control Techniques drive and motor combinations provide an optimised system in terms of ratings, performance, cost and ease of use. Unimotor motors fitted with high resolution SinCos or Absolute encoders are pre-loaded with the motor "electronic nameplate" data during the manufacturing process. This data can be read by Control Techniques' servo drives and used to automatically optimise the drive settings. This feature simplifies commissioning and maintenance, ensures consistent performance and saves time.

For further information on Control Techniques servo drives, please refer to the Digitax ST and Unidrive SP brochures.



Accuracy and resolution to suit your application requirements

Choosing the right feedback device for your application is critical in getting optimum performance. Unimotor has a range of feedback options that offer different levels of accuracy and resolution to suit most applications:

- Resolver: robust for extreme applications and conditions - low accuracy, medium resolution
- Incremental encoder: high accuracy, medium resolution
- Inductive Absolute: medium accuracy, medium resolution, single turn and multi-turn
- Optical SinCos/Absolute: high accuracy, high resolution, single turn and multi-turn
- Hiperface (SICK) and EnDAT (Heidenhain) protocols supported

Torque performance ■ Stall torque ■ Peak torque (3000 rpm)

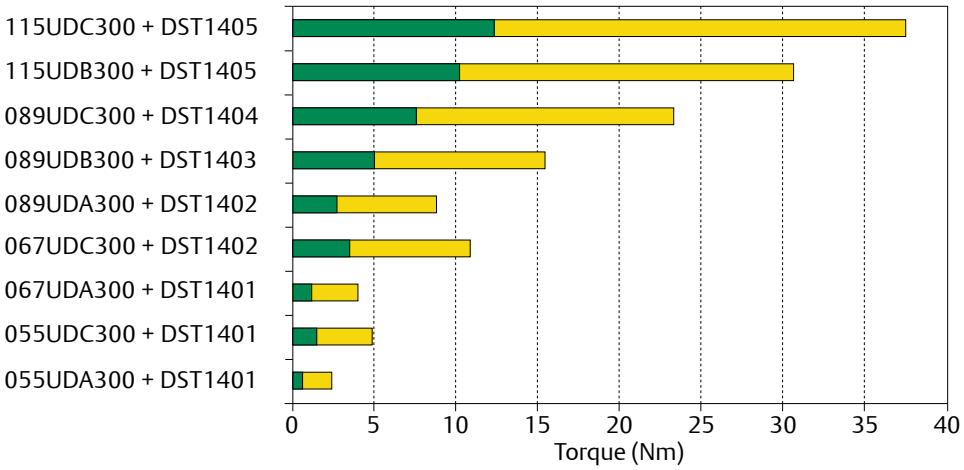

Conformance and standards

FM 30610

RoHS Compliant

Unimotor ordering code Information

Use the information below in the illustration to create an order code for a Unimotor.

The details in the band are an example of an order reference.

089	UD	B	30	5	B	A	CA	A
Frame size	Motor voltage	Stator length	Rated speed	Brake (24V)	Connection type	Output shaft	Feedback device	Inertia
		055–089 frame	055–067 frame	055 frame			055–067 frame	
055	ED = 220V	A	30 = 3000 rpm	0 = Not fitted (Std)	B = Power and Signal 90° rotatable	A = Keyed	AR = Resolver	A = Standard
067	UD = 400V	B	60 = 6000 rpm	1 = Parking brake			CR = Incremental Encoder (Renco) 4096 ppr (R35i)	
089		C	089 frame	X = Special			EM = Inductive Absolute Multi turn EQI 1130	
115		115 frame	30 = 3000 rpm	067–115 Frame			FM = Inductive Absolute Single turn ECI 1118	
		B	40 = 4000 rpm	0 = Not fitted (Std)			XX = Special	
		C	60 = 6000 rpm	5 = High energy dissipation parking brake			089 frame	
		D	115 frame				AE = Resolver	
			20 = 2000 rpm	X = Special			CA = Incremental Encoder (SICK) 4096 ppr (CFS50)	
			30 = 3000 rpm				CR = Incremental Encoder (Renco) 4096 ppr (R35i)	
							EB = Optical Absolute Multi turn EQN 1325	
							FB = Optical Absolute Single turn ECN 1313	
							EC = Inductive Absolute Multi turn EQI 1331	
							FC = Inductive Absolute Single turn ECI 1319	
							RA = Optical Sincos Multi turn SRM 50 (GEN 2)	
							SA = Optical Sincos Single turn SRS 50 (GEN 2)	
							XX = Special	
							115 Frame	
							AE = Resolver	
							CA = Incremental Encoder (SICK) 4096 ppr (CFS50)	
							EB = Optical Absolute Multi turn EQN 1325	
							FB = Optical Absolute Single turn ECN 1313	
							EC = Inductive Absolute Multi turn EQI 1331	
							FC = Inductive Absolute Single turn ECI 1319	
							RA = Optical Sincos Multi turn SRM 50 (GEN 2)	
							SA = Optical Sincos Single turn SRS 50 (GEN 2)	
							XX = Special	



Quick reference table

Frame size	PCD (mm)	Unimotor									Page No.
055	63			0.72 1.65 0.14 0.36							4
067	75				1.45 3.70 0.30 0.75						5
089	100					3.20 8.00 0.87 2.34					6
115	130							10.2 18.80 4.41 8.38			7
Stall	0	0.5	1.0	3.0	5.0	8.0	10.0	15.0	20.0	(Nm)	
Inertia	0	0.1	0.2	0.7	1.5	2.5	6.5	8.0	9.0	($kgcm^2$)	

EMERSON
Industrial Automation

Frame size 055 For 3 Phase VPWM drives

Motor frame size (mm)		055ED			055UD		
Voltage (Vrms)		200-240			380-480		
Frame length		A	B	C	A	B	C
Continuous Stall Torque (Nm)		0.72	1.18	1.65	0.72	1.18	1.65
Peak Torque (Nm)		2.88	4.72	6.60	2.88	4.72	6.60
Inertia (kgcm²)		0.14	0.25	0.36	0.14	0.25	0.36
Winding thermal time constant (s)		34.0	38.0	42.0	34.0	38.0	42.0
Motor weight unbraked (kg)		1.20	1.50	1.80	1.20	1.50	1.80
Motor weight braked (kg)		1.60	1.90	2.20	1.6	1.90	2.20
Number of poles		8	8	8	8	8	8
Speed 3000 (rpm)	Kt (Nm/A) =	0.74	0.87	0.91	0.74	1.49	1.65
	Ke (V/krpm) =	45.00	52.50	55.00	45.00	90.00	100.00
Rated torque (Nm)		0.70	1.05	1.48	0.70	1.05	1.48
Stall current (A)		0.97	1.36	1.81	0.97	0.79	1.00
Rated power (kW)		0.22	0.33	0.46	0.22	0.33	0.46
R (ph-ph) (Ω)		28.00	14.12	9.53	28.00	45.00	31.00
L (ph-ph) (mH)		50.00	32.00	23.00	50.00	100.00	75.00
Speed 6000 (rpm)	Kt (Nm/A) =	0.45	0.43	0.48	0.74	0.79	0.83
	Ke (V/krpm) =	27.00	26.00	29.00	45.00	47.50	50.00
Rated torque (Nm)		0.68	0.90	1.20	0.68	0.90	1.20
Stall current (A)		1.61	2.74	3.44	0.97	1.49	1.99
Rated power (kW)		0.43	0.57	0.75	0.43	0.57	0.75
R (ph-ph) (Ω)		8.50	3.55	2.38	28.00	10.70	7.80
L (ph-ph) (mH)		16.00	8.20	6.30	50.00	25.00	20.00

Δt= 100°C winding 40°C maximum ambient

All data subject to +/-10% tolerance

Stall torque, rated torque and power relate to maximum continuous operation tested in a 20°C ambient at 12kHz drive switching frequency

All other figures relate to a 20°C motor temperature.

Maximum intermittent winding temperature is 140°C

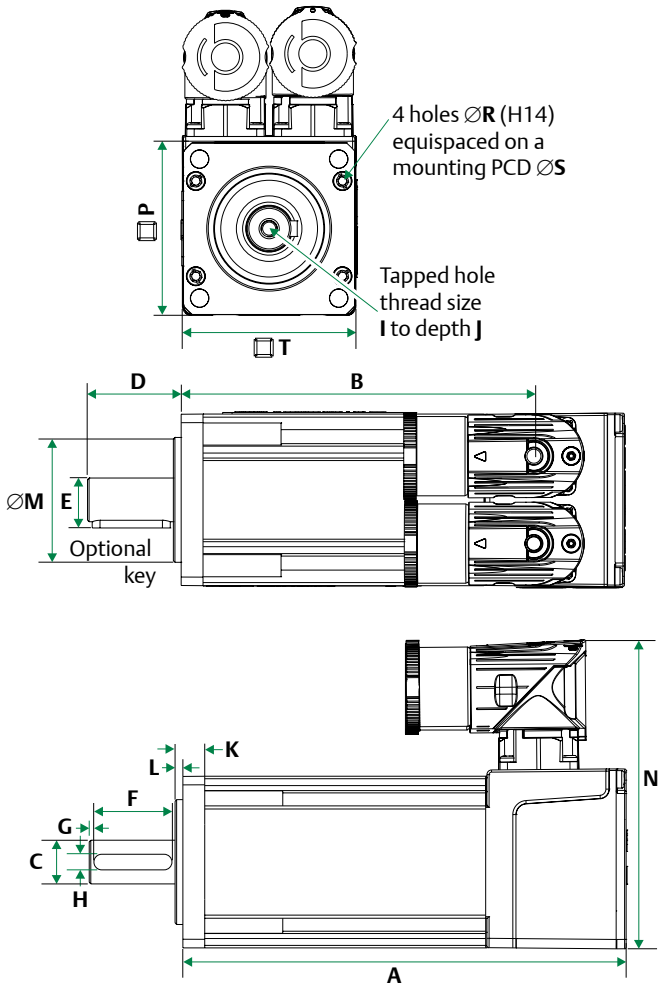

Motor dimension (mm)

Drawing number: GM496400

	Feedback AR, CR, EM/FM				Flange thickness	Register length	Registered diameter	Overall height	Flange square	Fixing hole diameter	Fixing hole PCD	Motor housing	Mounting bolts
	Unbraked length		Braked length										
	A	B	A	B	K	L	M (j6)	N	P	R (H14)	S	T	
055A	118.0	90.0	158.0	130.0	7.0	2.5	40.0	99.0	55.0	5.8	63.0	55.0	M5
055B	142.0	114.0	182.0	154.0									
055C	166.0	138.0	206.0	178.0									

Shaft dimensions (mm)

	Shaft diameter	Shaft length	Key height	Key length	Key to shaft end	Key width	Tapped hole thread size	Tapped hole depth
	C (j6)	D	E	F	G	H (h9)	I	J
14.0 Std	14	30.0	16.0	25.0	1.5	5.0	M5	12.5

Frame size 067 For 3 Phase VPWM drives

Motor frame size (mm)		067ED			067UD		
Voltage (Vrms)		200-240			380-480		
Frame length		A	B	C	A	B	C
Continuous Stall Torque (Nm)		1.45	2.55	3.70	1.45	2.55	3.70
Peak Torque (Nm)		4.35	7.65	11.10	4.35	7.65	11.10
Inertia (kgcm²)		0.30	0.53	0.75	0.30	0.53	0.75
Winding thermal time constant (s)		54	61	65	54	61	65
Motor weight unbraked (kg)		2.00	2.60	3.20	2.00	2.60	3.20
Motor weight braked (kg)		2.70	3.3	3.90	2.70	3.3	3.90
Number of poles		10	10	10	10	10	10
Speed 3000 (rpm)	Kt (Nm/A) =	0.93			0.80	1.60	1.60
	Ke (V/krpm) =	57.00			49.00	98.00	98.00
Rated torque (Nm)		1.40	2.45	3.50	1.40	2.45	3.50
Stall current (A)		1.56	2.74	3.98	1.81	1.59	2.31
Rated power (kW)		0.44	0.77	1.10	0.44	0.77	1.10
R (ph-ph) (Ω)		15.20	4.86	3.33	11.92	15.20	10.70
L (ph-ph) (mH)		45.43	17.40	12.70	35.18	54.40	40.80
Speed 6000 (rpm)	Kt (Nm/A) =	0.47			0.8		
	Ke (V/krpm) =	28.50			49.00		
Rated torque (Nm)		1.30	2.20		1.30	2.20	3.10
Stall current (A)		3.12	5.48		1.81	3.19	4.63
Rated power (kW)		0.82	1.38		0.82	1.38	1.95
R (ph-ph) (Ω)		3.76	1.22		11.92	3.79	2.68
L (ph-ph) (mH)		11.06	4.35		35.18	13.60	10.20

Δt= 100°C winding 40°C maximum ambient

All data subject to +/-10% tolerance

Stall torque, rated torque and power relate to maximum continuous operation tested in a 20°C ambient at 12kHz drive switching frequency

All other figures relate to a 20°C motor temperature.

Maximum intermittent winding temperature is 140°C

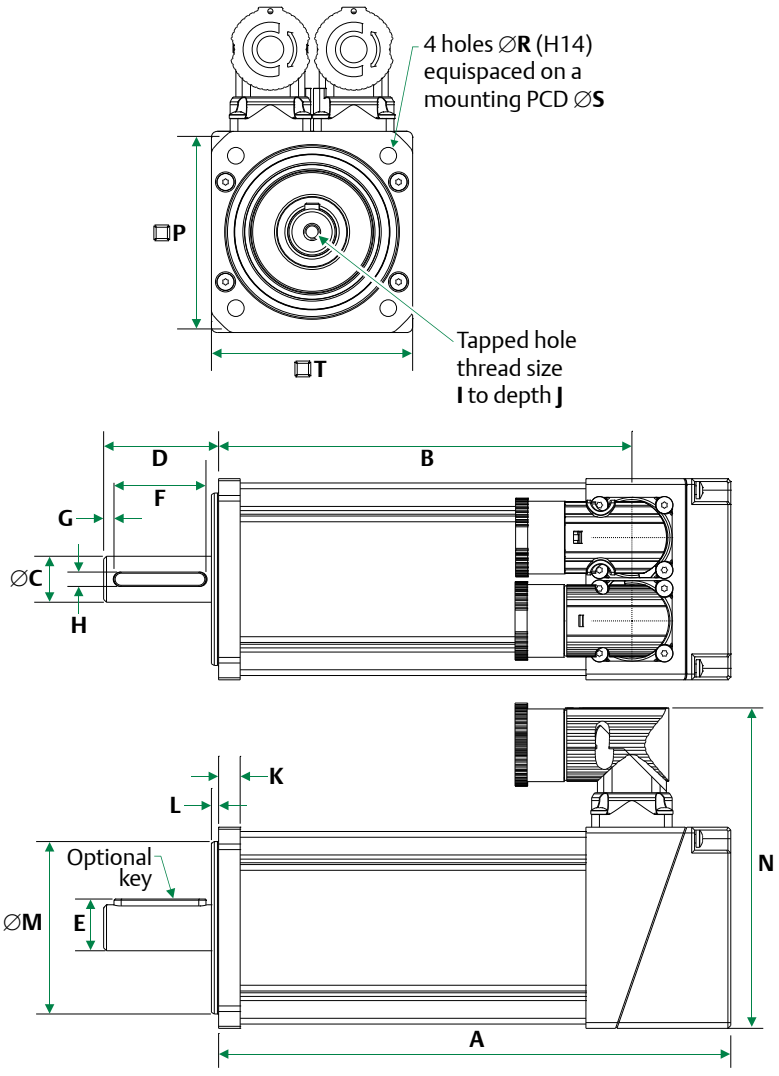

Motor dimension (mm)

Drawing number: IM/0694/GA

	Feedback AR, CR, EM/FM				Flange thickness	Register length	Register diameter	Overall height	Flange square	Fixing hole diameter	Fixing hole PCD	Motor housing	Mounting bolts
	Unbraked length		Braked length										
	A (± 1.1)	B (± 1.0)	A (± 1.1)	B (± 1.0)	K (± 0.5)	L (± 0.1)	M (j6)	N (± 0.3)	P (± 0.3)	R (H14)	S (± 0.4)	T (± 0.4)	
067A	142.7	108.8	177.7	143.8									
067B	172.7	138.8	207.7	173.8	7.5	2.50	60.0	111.5	70.0	5.8	75.0	67.00	M5
067C	202.7	168.8	237.7	203.8									

Shaft dimensions (mm)

	Shaft diameter	Shaft length	Key height	Key length	Key to shaft end	Key width	Tapped hole thread size	Tapped hole depth
	C (j6)	D (± 0.45)	E (+0.0 / -0.13)	F (± 0.25)	G (± 1.1)	H (h9)	I	J (± 0.1)
14.0 Std	14.0	30.0	16.0	22.0	3.6	5.0	M5 x 0.8	13.5

EMERSON
Industrial Automation

Frame size 089 For 3 Phase VPWM drives

Motor frame size (mm)	089ED			089UD		
Voltage (Vrms)	200-240			380-480		
Frame length	A	B	C	A	B	C
Continuous Stall Torque (Nm)	3.20	5.50	8.00	3.20	5.50	8.00
Peak Torque (Nm)	9.60	16.50	24.00	9.60	16.50	24.00
Inertia (kgcm²)	0.87	1.61	2.34	0.87	1.61	2.34
Winding thermal time constant (s)	85	93	98	85	93	98
Motor weight unbraked (kg)	3.30	4.40	5.50	3.30	4.40	5.50
Motor weight braked (kg)	4.30	5.40	6.50	4.30	5.40	6.50
Number of poles	10	10	10	10	10	10
Speed 3000 (rpm) Kt (Nm/A) = Ke (V/krpm) =	0.93 57.00			1.60 98.00		
Rated torque (Nm)	3.00	4.85	6.90	3.00	4.85	6.90
Stall current (A)	3.44	5.91	8.60	2.00	3.44	5.00
Rated power (kW)	0.94	1.52	2.17	0.94	1.52	2.17
R (ph-ph) (Ω)	3.28	1.54	0.89	10.32	5.05	3.21
L (ph-ph) (mH)	21.55	11.37	7.09	67.65	38.36	24.93
Speed 4000 (rpm) Kt (Nm/A) = Ke (V/krpm) =	0.70 42.75			1.2 73.5		
Rated torque (Nm)	2.90	4.55	6.35	2.90	4.55	6.35
Stall current (A)	4.57	7.86	11.43	2.67	4.58	6.67
Rated power (kW)	1.21	1.91	2.66	1.21	1.91	2.66
R (ph-ph) (Ω)	2.04	0.78	0.45	6.04	2.99	1.75
L (ph-ph) (mH)	13.20	5.97	3.66	38.51	21.90	14.03
Speed 6000 (rpm) Kt (Nm/A) = Ke (V/krpm) =	0.47 28.50			0.8 49		
Rated torque (Nm)	2.65	3.80	5.00	2.65	3.80	5.00
Stall current (A)	6.88	11.83	17.20	4.00	6.88	10.00
Rated power (kW)	1.67	2.39	3.14	1.67	2.39	3.14
R (ph-ph) (Ω)	0.96	0.38	0.23	2.58	1.27	0.80
L (ph-ph) (mH)	6.11	2.84	1.89	16.91	9.59	6.23

Δt= 100°C winding 40°C maximum ambient

All data subject to +/-10% tolerance

Stall torque, rated torque and power relate to maximum continuous operation tested in a 20°C ambient at 12kHz drive switching frequency

All other figures relate to a 20°C motor temperature.

Maximum intermittent winding temperature is 140°C

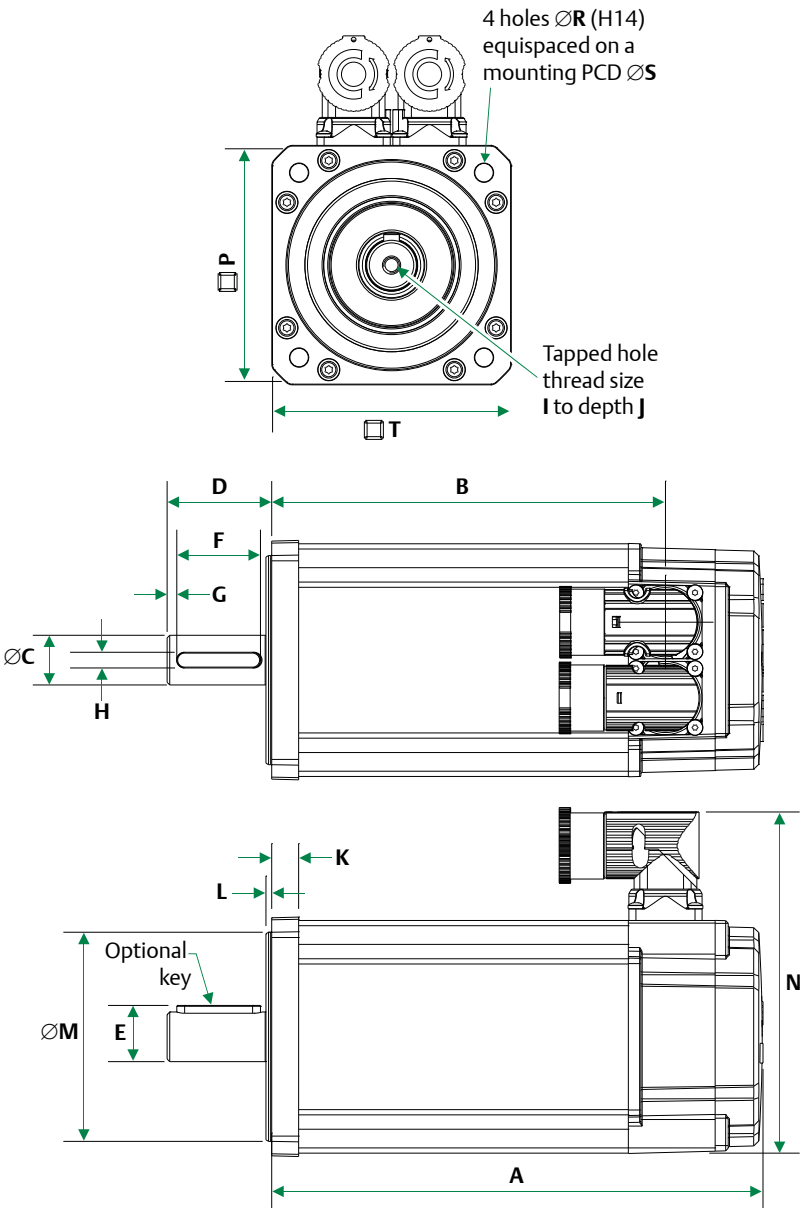

Motor dimension (mm)

Drawing number: IM/0688/GA

	Feedback EC / FC				Flange thickness	Register length	Register diameter	Overall height	Flange square	Fixing hole diameter	Fixing hole PCD	Motor housing	Mounting bolts
	Unbraked length		Braked length										
	A (± 0.9)	B (± 1.0)	A (± 0.9)	B (± 1.0)	K (± 0.5)	L (± 0.1)	M (j6)	N (± 1.0)	P (± 0.28)	R (H14)	S (± 0.4)	T (± 0.7)	
089A	147.8	110.5	187.9	150.6									
089B	177.8	140.5	217.9	180.6	10.3	2.20	80.0	130.5	91.0	7.00	100.0	89.0	M6
089C	207.8	170.5	247.9	210.6									

	Feedback FB, EB/CA/SA, RA		Feedback AE/CR	
	Unbraked length	Braked length	Unbraked length	Braked length
	A (± 0.9)	A (± 0.9)	A (± 0.9)	A (± 0.9)
089A	160.8	200.9	137.8	177.9
089B	190.8	230.9	167.8	207.9
089C	220.8	260.9	197.8	237.9

Shaft dimensions (mm)

	Shaft diameter	Shaft length	Key height	Key length	Key to shaft end	Key width	Tapped hole thread size	Tapped hole depth
	C (j6)	D (± 0.45)	E (+ 0.009 / -0.134)	F (± 0.25)	G (± 1.1)	H (h9)	I	J (± 0.1)
19.0 Std	19.0	40.0	21.5	32.0	3.7	6.0	M6 x 1.0	17.0

Frame size 115 For 3 Phase VPWM drives

Motor frame size (mm)		115ED			115UD		
Voltage (Vrms)		200-240			380-480		
Frame length		B	C	D	B	C	D
Continuous Stall Torque (Nm)		10.20	14.60	18.80	10.20	14.60	18.80
Peak Torque (Nm)		30.60	43.80	56.40	30.60	43.80	56.40
Inertia (kgcm²)		4.41	6.39	8.38	4.41	6.39	8.38
Winding thermal time constant (s)		164	168	175	164	168	175
Motor weight unbraked (kg)		7.20	8.90	10.70	7.20	8.90	10.70
Motor weight braked (kg)		8.70	10.40	12.20	8.70	10.40	12.20
Number of poles		10	10	10	10	10	10
Speed 2000 (rpm)	Kt (Nm/A) =		1.40			2.4	
	Ke (V/krpm) =		85.50			147	
Rated torque (Nm)		8.60	11.90	15.60	8.60	11.90	15.60
Stall current (A)		7.29	10.43	13.43	4.25	6.08	7.83
Rated power (kW)		1.80	2.49	3.27	1.80	2.49	3.27
R (ph-ph) (Ω)		1.40	0.77	0.58	4.41	2.41	1.80
L (ph-ph) (mH)		12.84	7.87	6.15	40.60	24.69	19.45
Speed 3000 (rpm)	Kt (Nm/A) =		0.93			1.60	
	Ke (V/krpm) =		57.00			98.00	
Rated torque (Nm)		7.70	10.50		7.70	10.50	13.60
Stall current (A)		10.97	15.70		6.38	9.13	11.75
Rated power (kW)		2.42	3.30		2.42	3.30	4.27
R (ph-ph) (Ω)		0.58	0.38		1.83	1.16	0.75
L (ph-ph) (mH)		5.40	3.85		16.93	11.88	8.11

Δt= 100°C winding 40°C maximum ambient
All data subject to +/-10% tolerance

Stall torque, rated torque and power relate to maximum continuous operation tested in a 20°C ambient at 12kHz drive switching frequency

All other figures relate to a 20°C motor temperature.

Maximum intermittent winding temperature is 140°C

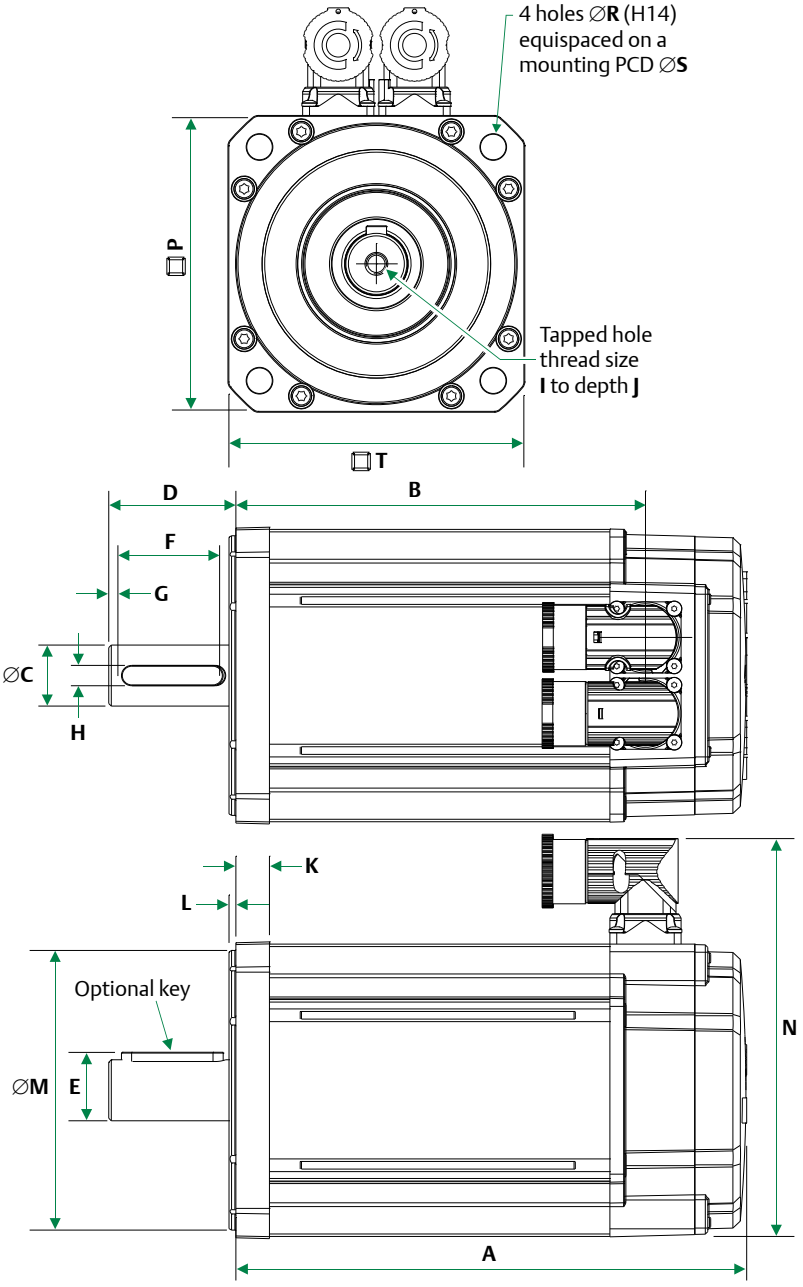

Motor dimension (mm)

Drawing number: IM/0689/GA

	Feedback EC/FC				Flange thickness	Register length	Register diameter	Overall height	Flange square	Fixing hole diameter	Fixing hole PCD	Motor housing	Mounting bolts
	Unbraked length		Braked length										
	A (± 0.9)	B (± 1.0)	A (± 0.9)	B (± 1.0)	K (± 0.5)	L (± 0.1)	M (j6)	N (± 1.0)	P (± 0.31)	R (H14)	S (± 0.4)	T (± 0.7)	
115B	193.8	154.0	230.9	191.1									
115C	223.8	184.0	260.9	221.1	13.2	2.70	110.0	156.5	116.0	10.00	130.0	115.0	M8
115D	253.8	214.0	290.9	251.1									

	Feedback FB, EB/CA/SA, RA		Feedback AE	
	Unbraked length	Braked length	Unbraked length	Braked length
	A (± 0.9)	A (± 0.9)	A (± 0.9)	A (± 0.9)
115B	206.8	243.9	183.8	220.9
115C	236.8	273.9	213.8	250.9
115D	266.8	303.9	243.8	280.9

Shaft dimensions (mm)

	Shaft diameter	Shaft length	Key height	Key length	Key to shaft end	Key width	Tapped hole thread size	Tapped hole depth
	C (j6)	D (± 0.45)	E (+0.009 / -0.294)	F (± 0.25)	G (± 1.1)	H (h9)	I	J (± 0.1)
24.0 Std	24.0	50.0	27.0	40.0	5.3	8.0	M8 x 1.25	20.0

EMERSON
Industrial Automation

Motor selection

Motor derating

Any adverse operating conditions require that the motor performance be derated. These conditions include; ambient temperature above 40°C, motor mounting position, drive switching frequency or the drive being oversized for the motor.

Ambient temperatures

The ambient temperature around the motor must be taken into account. For ambient temperatures above 40°C the torque must be derated using the following formula as a guideline. (Note: Only applies to 2000/3000rpm motors and assumes copper losses dominate)

New derated torque = Specified torque x √ [1-((Ambient temperature - 40°C) / 100)]

For example with an ambient temperature of 76°C the new derated torque will be 0.8 x specified torque.

Mounting arrangements

The motor torque must be derated if the motor mounting surface is heated from an external source, such as a gearbox. The motor is connected to a poor thermal conductor. The motor is mounted with the connectors on the side or vertical. The motor is in a confined space with restricted air flow.

Drive switching frequency

Most Digitax ST / Unidrive SP nominal current ratings are reduced for the higher switching frequencies see Digitax ST or Unidrive SP manual for details.

See the table below for the motor de rate factors. These figures are for guidance only.

(Note: Only applies to motors up to 3000rpm and assumes copper losses dominate)

Switching frequency	Motor type/frame			
	055	067	089	115
3kHz	0.92	0.93	0.89	0.89
4kHz	0.93	0.94	0.91	0.92
6kHz	0.95	0.95	0.95	0.96
8kHz	0.96	0.98	0.97	0.98
12/16kHz	1	1	1	1

Thermal test conditions

The performance data shown has been recorded under the following conditions. Ambient temperature 20°C, with the motor mounted on a thermally isolated aluminum plate as shown below.

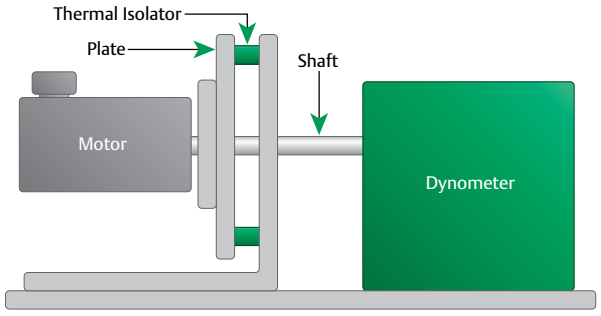

Motor type/frame	Aluminium heatsink plate
055mm	110 x 110 x 27mm
067-089mm	250 x 250 x 15mm
115mm	350 x 350 x 20mm

Thermal protection

Thermistor protection (145°C) is built into the motor windings and gives an indication of serious overheating problems. The installer must connect the thermistor to the drive, failure to do so will invalidate the motor warranty in respect of a burnt out winding.

Environmental conditions

Any liquids or gases that may come into contact with the motor must be confirmed to ensure compliance with the correct international standards.

Brake Specification

Motor frame	Supply volts	Input power	Static torque		Release time	Moment of inertia	Backlash
			Standard parking brake (01)	High energy parking brake (05)			
Size	Vdc	Watts	Nm	Nm	ms nom	kgcm² *	Degrees**
055	24	6.3	1.8	N/A	22	0.03	0.73
067	24	10.2	N/A	4	<50	0.073	0.75
089	24	23.35	N/A	10	<50	0.115	0.75
115	24	19.5	N/A	25	120	0.327	0.75

*Note 1 kgcm² = 1x10-4kgm² **Backlash figure will increase with time

- The brakes are intended for parking duty and are not for dynamic or safety use
- The brake will engage when power is removed.
- Refer to your Drive Centre or Distributor if your application requires dynamic braking in emergency conditions.
- To provide protection to the brake control circuit it is recommended that a diode is connected across the output terminals of the solid state or relay contacts devices.
- Figures are shown at 20° ambient. Apply a de rate factor of 0.7 to the standard brake torque figures if motor temperature is above 100°C



Feedback

Feedback device part number code	Feedback type	Encoder supply voltage[1]	Sincos cycles or incremental pulses per revolution	Resolution available to position loop[2&3]	Feedback Accuracy[1]
055-067 motors					
AR	Resolver	7V rms Excitation 5kHz	1	Medium 16384 (14 bit)	Low +/- 600”
CR	Incremental Encoder	5Vdc	4096	Medium 16384 (14 bit)	Medium +/- 150”
EM (Multi-turn) **FM (Single turn)**	Inductive Absolute Encoder EnDat 2.1	5Vdc	16	High 2.62x10^5 (18 bits)	Medium +/- 480”
089-115 motors					
AE	Resolver	6 V rms Excitation 6kHz	1	Medium 16384 (14 bit)	Medium +/- 720”
CA	Incremental Encoder	5Vdc	4096	Medium 16384 (14 bit)	High +/- 60”
EC (Multi-turn) **FC (Single turn)**	Inductive Absolute Encoder EnDat 2.1	7 - 10Vdc	32	Medium Absolute position 524288 (19 bits)	Medium +/- 280”
RA (Multi-turn) **SA (Single turn)**	SinCos Optical Encoder Hiperface	7 - 12Vdc	1024	Very high 1.04x10^6 (20 bits)	High For SinCos Integral non-linearity +/- 45” For SinCos Differential non-linearity +/- 7” (Total accuracy+/-52”)
EB (Multi-turn) **FB (Single turn)**	Optical Absolute Encoder EnDat 2.2	3.6 - 14Vdc	2048	Very High 2.08x10^6 (21 bits)	Very High +/-20” (Differential non linearity +/- 1% signal period)

Notes:

1) The output from the resolver is an analogue output. The resolution is determined by the analogue to digital converter used. The value shown is when the resolver is used in conjunction with the SM-Resolver.

2) The sin and cosine outputs from the SinCos optical encoders are analogue outputs. With Unidrive SP and Digitax ST the resolutions quoted above are when the encoder type is set to either SC Endat or SC Hiper depending on the encoder.

3) The information is supplied by the feedback device manufacturer and relates to it as a standalone device. The values may change when mounted into the motor and connected to a drive.

These values have not been verified by CT Dynamics.

Resolver

A passive wound device consisting of a stator and rotor elements excited from an external source, such as an SM-Resolver, the resolver produces two output signals that correspond to the sine and cosine angle of the motor shaft. This is a robust absolute device of low accuracy, capable of withstanding high temperature and high levels of vibration. Positional information is absolute within one turn - i.e. position is not lost when the drive is powered down.

Incremental Encoder

An electronic device using an optical disc. The position is determined by counting steps or pulses. Two sequences of pulses in quadrature are used so the direction sensing may be determined and 4 x (pulses per rev) may be used for resolution in the drive. A marker pulse occurs once per revolution and is used to zero the position count. The encoder also provides commutation signals, which are required to determine the absolute position during the motor phasing test. This device is available in 4096, 2048 and 1024 ppr version. Positional information is non absolute - i.e. position is lost when the drive is powered down.

SinCos/Absolute Encoders

Types available are: Optical or Inductive - which can be single or multi-turn.

1) Optical: An electronic device using an optical disc. An absolute encoder with high resolution that employs a combination of absolute information, transmitted via a serial link, and sine/cosine signals with incremental techniques.

2) Inductive: An electronic device using inductively coupled PCB’s. An absolute encoder with medium resolution that employs a combination of absolute information, transmitted via a serial link, and sine/cosine signals with incremental techniques. This encoder can be operated with the drive using either sine/consine or absolute (serial) values only. Positional information is absolute within 4096 turns - i.e. position is not lost when the drive is powered down.

Multi-turn: As previous but with extra gear wheels included so that the output is unique for each shaft position and the encoder has the additional ability to count complete turns of the motor shaft up to 4096 revolutions.

Electronic nameplating

Available on both these types of encoders, and allows quick set-up times as the motor information is stored on board the encoder (067-115 motors only).

EMERSON
Industrial Automation

Cable information

PS	B	A	H	A	015
Cable type	Jacket	Phase & ground: conductor size	Connection details drive end	Connection details motor end	Cable length
PS = Power (Standard)	**B** = PUR	**H*** = 1.0mm² **10A**	**C** = Extension power connector 6 way	**A** = **055 - 115** Unimotor power connector	Min = 001 (1m)
PB = Power (with brake)	**C** = OFS	**G** = 1.5mm² **16A**	**F** = **Unidrive** (1-2) Ferrules		Max = 100 (100m)
		A = 2.5mm² **22A**	**H** = **Digitax** ST and **Unidrive** SP0 Ferrules	**X** = Cut end	
		B = 4.0mm² **30A**	**X** = Cut end		

* Only available in OFS

Cable type	PS for motor without brakes, PB for motors with brake.
Jacket	B is for a PUR sheath and is the standard selection. C is for the OFS sheath and is the Static cable selection.
Conductor size	Select the conductor size according to the motors STALL CURRENT. Ratings are for individual cables (not lashed together) in free air temperature up to 40°C – make allowances as appropriate.
Connection detail drive end	Select the correct drive end connection for the drive in use.
Connection detail motor end	Select the correct motor end connection for the motor in use.
Length	Numbers represent the required cable length in metres.

SI	B	A	A	A	015
Cable type	Jacket	Special options		Connection details motor end	Cable length*
SI = Incremental Encoder Hyperboloid pins	**B** = PUR	**A** = Standard cable		**A** = Encoder connector	Min = 001 (1m)
SR = Resolver	**C**** = OFS	**E** = Twisted screened SS cable		**B** = Resolver connector	Max = 100 (100m)
SS = Sin/Cos Encoder		**L** = 8.5mm dia SI cable		**C** = Sin/Cos connector (Hiperface)	
SE = Incremental Encoder Split pins				**E** = 17 way extension connector	
				F = 90° Encoder connector	
Connection details drive end				**G** = 90° Resolver connector	
A = **Digitax ST/Unidrive /Epsilon EP** Encoder 15 pin connector				**H** = 90° Sin/Cos connector (Hiperface)	
B = Resolver / Sin/Cos Ferrules				**N** = Sin/Cos connector (EnDat)	
F = **Epsilon** Encoder 26 pin connector				**O** = 90° Sin/Cos connector (EnDat)	
H = **Digitax ST/Unidrive** Sin/Cos 15 pin connector				**X** = Cut end	
I = Extension connector male pins					
X = Cut end					

* Max cable length - 50m with the SIBA/SICA as standard, 100m only if +5V tolerance can be maintained.

* Max cable length - 10m with the SIBL.

* Max cable length - Heidenhain EC/FC 20m EB/FB 30m with the SSBA cable,EC/FC 20m EB/FB 100m with the SSBE cable.

** OFS only available on SI encoder cable.

Cable type	Choose the cable type to match the feedback device.
Jacket	B is for the PUR sheath and is the dynamic cable selection. C is for the OFS sheath and is the Static cable selection.
Special options	A is for standard cable. L is for the low cost 8.5mm incremental cable.
Connection detail drive end	Select the correct drive end connection for the drive in use.
Connection detail motor end	Select the correct motor end connection for the motor feedback device in use.
Length	Numbers represent the required cable length in metres.

Motor connector details

Power plug

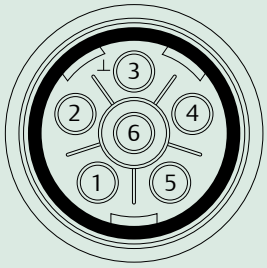

	055 -115 with brake	055 -115without brake
Pin	**Function**	**Function**
1	Phase U (R)	Phase U (R)
2	Phase V (S)	Phase V (S)
3	Ground	Ground
4	Phase W (T)	Phase W (T)
5	Brake	-
6	Brake	-
Shell	Screen	Screen



Signal plug

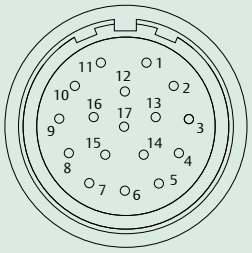

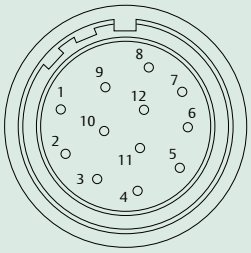

	Incremental encoder (CR,CA)	Heidenhain Absolute Encoders (EM, FM, EC, FC, EB, FB)	Resolver (AR, AE)	Sick|Stegmann Sin/Cos encoders (RA, SA)
Pin	**Function**	**Function**	**Function**	**Function**
1	Thermistor	Thermistor	Excitation high	REF Cos
2	Thermistor	Thermistor	Excitation low	+Data
3	-	Screen (Optical encoder only)	Cos high	-Data
4	S1	-	Cos low	+Cos
5	S1 Inverse	-	Sin high	+Sin
6	S2	-	Sin low	REF Sin
7	S2 Inverse	-	Thermistor	Thermistor
8	S3	+ Clock	Thermistor	Thermistor
9	S3 Inverse	- Clock	-	Screen
10	Channel A	+ Cos	-	0 Volts
11	Index	+ Data	-	-
12	Index Inverse	- Data	-	+ Volts
13	Channel A Inverse	- Cos	-	-
14	Channel B	+ Sin	-	-
15	Channel B Inverse	- Sin	-	-
16	+ Volts	+ V	-	-
17	0 Volts	0 Volts	-	-
Body	Screen	Screen	Screen	Screen