UNIDRIVE M600



HIGH PERFORMANCE OPEN-LOOP CONTROL DRIVE

0.75 kW – 2.8 MW (1.0 - 4,200 hp)
200 V | 400 V | 575 V | 690 V

Unidrive M600 Highlights

- Energy savings
- Minimise downtime and system set-up time with advanced keypad options
- Reduced system costs with direct integration
- Improve throughput with advanced open-loop motor control algorithms
- Conform to safety standards, maximise uptime and reduce costs by direct safety system integration

KEY FUNCTIONS

Function		Function	
Jog	✓	Supply loss detection	✓
Bi-polar reference	✓	Low DC link operation	✓
Pre-set speeds	8	Analogue input control	3
Preset timer	✓	Analogue output control	2
Skip frequencies	3	Temperature monitoring	✓
Skip frequency dead bands	✓	Digital input control	3
Local/Remote	✓	Digital I/O programmable control	3
S-Ramp	✓	Relay control	1
Acceleration Rates	8	Mechanical Brake Controller	✓
Deceleration Rates	8	Keypad button assignment	✓
Torque reference	✓	Motorised pot	✓
Control mode: Linear V/f	✓	Logic function control	✓
Control mode: Open-loop vector	✓	Timer function control	✓
Control mode: Quadratic V/f	✓	Limit switch control	✓
Stator resistance compensation	✓	Variable selector	✓
Slip compensation	✓	PID Control Loops	2
Sensorless control of induction motors	✓	Energy meter	✓
Sensorless control of permanent magnet motors	✓	Trip time stamping (using real-time clock , if available)	✓
Auto-tune static (including permanent magnet motors)	✓	Trip logging	8
Auto-tune rotating	✓	Run time log	✓
Catch a spinning motor	✓	Control word control	✓
Stop mode: Ramp	✓	Auto reset	✓
Stop mode: Coast	✓	Cloning	✓
Stop mode: Fast Ramp	✓	On-board PLC	16kb
DC injection braking	✓	Additional Application parameters	148
Programmable braking	✓	Second motor set-up	✓
Motor Pre-heat control	✓	Speed feedback via options	✓

SPECIFICATION

Unidrive M600	
Items supplied with the drive	Control Getting Started Guide, Power Installation Guide, Safety Information, Quality Certificate, Control signal connectors, 24V power supply connector (frames 6 to 11), Grounding bracket, Surface mounting brackets, DC connection grommets (frames 3 to 6), Supply and motor connectors (frames 3 to 5), Nuts for supply and motor terminals (frames 6 to 11)
Storage temperature	-40°C to 55°C, -40°F to 131°F
Operating temperature without de-rate	-20°C to 40°C, -4°F to 104°F
Operating temperature with de-rate	40°C to 55°C, 104°F to 131°F
Supply requirements	Maximum supply imbalance: 2 % negative phase sequence (equivalent to 3 % voltage imbalance between phases). Input frequency 45 to 66Hz
Switching frequency range	2,3,4,6,8,12,16kHz (Factory default = 3kHz Open-loop/RFC-A, 6kHz RFC-S)
Approvals	CE (European Union), cUL Listed (USA and Canada), DNV (marine applications), RCM (Australia/ New Zealand), EAC (Russian Customs Union)
Product safety standard	EN61800-5-1
Functional safety (Single STO function)	Independently assessed by TÜV to IEC 61800-5-2 SIL 3 and EN ISO 13849-1 PL e
Altitude	1000m – No de-rate. 1000m to 3000m - 1% de-rate/100m
Humidity	95% Non-condensing at 40 °C (104 °F)
Pollution	Degree 2. Dry, non-conducting pollution only
IP Rating	IP20 / NEMA1 / UL TYPE 1 (UL open class as standard, additional kit needed to achieve Type 1) IP65 / NEMA4 / UL TYPE 12 rating on the rear of drive when through panel mounted (Frames 3 to 8) IP55 / NEMA4 / UL TYPE 12 rating on the rear of drive when through panel mounted (Frames 9 to 11)
Vibration	Reference standard IEC60068-2-27, IEC60068-2-29 bump test, IEC60068-2-64 random vibration test, IEC60068-2-6, EN61800-5-1 sinusoidal vibration test. Tested to Environmental Category ENV3.
Mounting methods	Frame 3 to 11 – Surface mount via supplied mounting brackets or through-panel mount via optional mounting brackets Frame 3 to 5 – Tile mount via optional mounting brackets
Output frequency/speed range	599Hz (Open-loop), 560Hz (RFC-A, RFC-S)
Braking	In-built braking transistor, optional internal resistor on frame 3 to 5 or external resistor (all frames)
Operating modes	Open-loop: Open-loop vector, fixed V/F, quadratic V/F RFC-A: Rotor Flux Control for Asynchronous motors, with or without position feedback RFC-S: Rotor Flux Control for Synchronous motors, with or without position feedback Regen: For use as a regenerative front end for four quadrant operation
Overload capability	Normal duty (cold): Open-loop – 110% for 165s, RFC – 110% for 165s Heavy duty (cold): Open-loop – 150% for 60s, RFC – 200% for 28s (size 8 and below) Heavy duty (cold): Open-loop – 136% for 81s, RFC – 175% for 42s (size 9, 10, 11)

Overvoltage category	Evaluated for OVC III.
Corrosive environments	Concentrations of corrosive gases must not exceed the levels given in: Table A2 of EN 50178:1998, Class 3C2 of IEC 60721-3-3 This corresponds to the levels typical of urban areas with industrial activities and/or heavy traffic, but not in the immediate neighbourhood of industrial sources with chemical emissions.
Immunity Compliance	IEC61800-3, IEC 61000-4-2, IEC 61000-4-3, IEC61000-4-4, IEC61000-4-5, IEC61000-4-6, IEC61000-4-8, IEC61000-4-11, IEC61000-6-1, IEC 61000-6-2.
Emission compliance	Capable of meeting the requirements of Equipment Category C3 without external filters or line reactors. Capable of meeting the requirements of Equipment Category C2 when installed with the recommended filters and line reactors. IEC61800-3, EC61000-6-4, EN61000-3-2, EN61000-3-12, EN61000-3-3, EN12015
Cooling	Forced cooled
Safe Torque Off	Single Channel STO, SIL3.
Communications	RS485, Modbus RTU SI Options: EtherNet/IP, EtherCAT, PROFIBUS, PROFINET, DeviceNet, CANopen, POWERLINK
Control I/O	3 x Analogue input (1 x differential, 2 x single ended), 2 x Analogue output, 3 x Digital I/O programmable, 3 x Digital input (including 2 x high speed – 250µs), 1 x NO relay 250Vac Max., 6 x 0V common, 1 x 24V supply input, 1 x 24V user output, 1 x 10V user output, 1 x Safe Torque Off input. Additional I/O available with SI-I/O option module.
Resolution and Accuracy	Frequency/speed accuracy: 0.01% (preset speed) Open loop resolution – Preset reference: 0.1 Hz, Precision reference: 0.001 Hz Closed loop resolution: Preset reference: 0.1 rpm, Precision reference: 0.001 rpm Analog input 1: 11 bit plus sign, Analog input 2: 11 bit plus sign Current resolution: 10 bit plus sign, Current accuracy: typical 2 %
On-Board user program capability	16kB, IEC 61131-3 compliant
Keypad	Optional LCD keypad with or without real-time clock Optional Remote LCD keypad with or without real-time clock
Parameter backup and cloning	Smartcard and SD card (using SD card adapter)
PC Tools	'Connect' commissioning and cloning tool including CT Oscilloscope, Machine Control Studio for On-board PLC programming.
Warranty	26 months
Supported options	RTC Remote Keypad, KI-485 Adapter, HMI, RS485-Communications lead, SI-EtherCAT, SI-PROFIBUS, SI-Ethernet, SI-DeviceNET, SI-CANopen, SI-PROFINET, SI-I/O, SI -Encoder (speed feedback), SI-Universal Encoder (speed feedback), SI-Safety, Remote I/O, Smartcard, SD card (using SD card adapter)
Accessories	Through-hole IP65 mounting kit, UL type conduit kits, SP Retrofit mounting brackets, External EMC filters, Grounding bracket (supplied with the drive)

DIMENSIONS

Frame Size	Overall Dimensions						Mounting Dimensions				Mounting Hole Diameter		Weight	
	mm			in			mm		in		mm	in	kg	lb
	H**	W	D	H**	W	D	H	W	H	W				
3	365	83	200	14.37	3.27	7.87	370	73	14.57	2.87	5	0.2	4.0* 4.5	8.8* 9.9
4	365	124	200	14.37	4.88	7.87	375	106	14.76	4.17	6	0.23	6.5	14.3
5	365	143	200	14.37	5.63	7.87	375	106	14.76	4.17	6.5	0.26	7.4	16.3
6	365	210	227	14.37	8.27	8.94	378	196	14.88	7.72	7	0.28	14	30.9
7	508	270	280	20	10.63	11.02	538	220	21.18	8.66	9	0.35	28	61.7
8	753	310	290	29.65	12.21	11.42	884	259	30.87	10.2	9	0.35	52	114.6
9E / 10E	1010	310	290	39.7	12.21	11.42	1051	259	41.38	10.2	9	0.35	46	101.4
9A	1049	310	290	41.3	12.21	11.42	1090	259	42.91	10.2	9	0.35	66.5	146.6
11E	1190	310	312	46.9	12.2	48.9	1222	259	48.11	10.2	9	0.35	63	138.9



*** 034300078, 034300100 weigh 4.5 kg (9.9 lbs), all other variants weigh 4.0 kg (8.8 lbs)**

**** Overall dimensions do not include removable mounting brackets**

CONNECTIONS

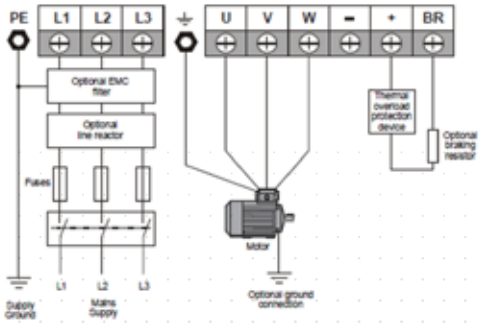

Typical Power Connections

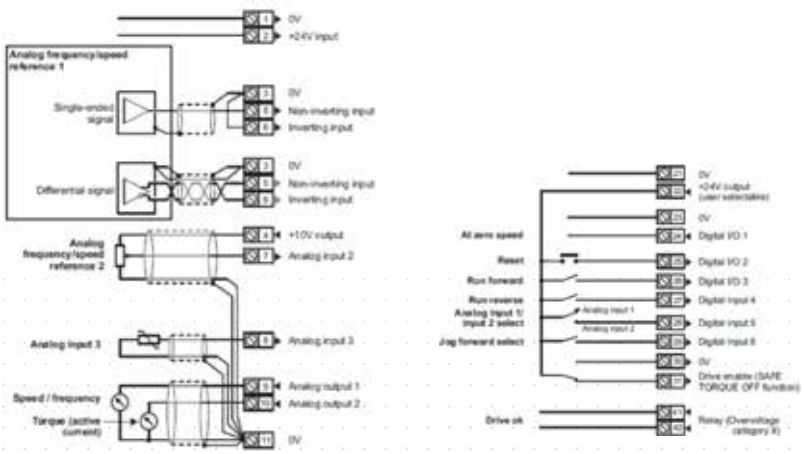

Default Control Connections

NOTE: DC- terminal is not accessible on frame 9E to 11E

PRODUCT CODES

M600 03 4 00078 A 10100A B 100

- **M600** — Model: M600
- **03** — Frame Size
- **4** — Voltage Rating:
  - 2 = 200V (200V-240V +/-10%)
  - 4 = 400V (380V-480V +/-10%)
  - 5 = 575V (500V-575V +/-10%)
  - 6 = 690V (500V-690V +/-10%)
- **00078** — Heavy Duty Current Rating x 10
- **A** — Drive Format
  - A = AC in AC out, internal choke*
  - E = AC in AC out, external choke required
- **10100A** —
- **B** —
  - B = Brake Transistor included
  - N = No Brake Transistor
- **100** —

***Frame 9 and below**

Documentation & Downloads

Product documentation and PC tools available for download from:
www.controltechniques.com/support

MODEL NUMBER AND RATINGS

Product Code*	Frame Size	Heavy Duty					Normal Duty			
		Rated Current (A)	Motor Shaft Power		Peak Current Open Loop (A)	Peak Current RFC (A)	Rated Current (A)	Motor Shaft Power		Peak Current (A)
			(kW)	(HP)				(kW)	(HP)	
200 V (200 - 240 V ± 10 %)										
M600-03200050A	3	5	0.75	1	7.8	10	6.6	1.1	1.5	7.26
M600-03200066A	3	6.6	1.1	1.5	10.3	13.2	8	1.5	2	8.8
M600-03200080A	3	8	1.5	2	12.4	16	11	2.2	3	12.1
M600-03200106A	3	10.6	2.2	3	16.5	21.2	12.7	3	3	13.97
M600-03200160A	3	16	4	5	37.3	48	16	4	5	48

MODEL NUMBER AND RATINGS

Product Code*	Frame Size	Heavy Duty					Normal Duty			
		Rated Current (A)	Motor Shaft Power		Peak Current Open Loop (A)	Peak Current RFC (A)	Rated Current (A)	Motor Shaft Power		Peak Current (A)
			(kW)	(HP)				(kW)	(HP)	
200 V (200 - 240 V ± 10 %)										
M600-04200137A	4	13.7	3	3	21.3	27.4	18	4	5	19.8
M600-04200185A	4	18.5	4	5	28.8	37	25	5.5	7.5	27.5
M600-05200250A	5	25	5.5	7.5	38.9	50	30	7.5	10	33
M600-06200330A	6	33	7.5	10	51.3	66	50	11	15	55
M600-06200440A	6	44	11	15	68.4	88	58	15	20	63.8
M600-07200610A	7	61	15	20	94.9	122	75	18.5	25	82.5
M600-07200750A	7	75	18.5	25	116.7	150	94	22	30	103.4
M600-07200800A	7	80	22	30	124.5	166	80	30	40	128.7
M600-07200830A	7	83	22	30	129.1	166	117	30	40	128.7
M600-08201160A	8	116	30	40	180.4	232	149	37	50	163.9
M600-08201320A	8	132	37	50	205.3	264	180	45	60	198
M600-09201760A/E	9	176	45	60	239.6	308	216	55	75	237.6
M600-09202190A/E	9	219	55	75	298.1	383.25	266	75	100	292.6
M600-10202830E	10	283	75	100	385.2	495.25	325	90	125	357.5
M600-10203000E	10	300	90	125	408.3	525	360	110	150	396
400 V (380 - 480 V ± 10 %)										
M600-03400025A	3	2.5	0.75	1	3.9	5	3.4	1.1	1.5	3.74
M600-03400031A	3	3.1	1.1	1.5	4.8	6.2	4.5	1.5	2	4.95
M600-03400045A	3	4.5	1.5	2	7	9	6.2	2.2	3	6.82
M600-03400062A	3	6.2	2.2	3	9.6	12.4	7.7	3	5	8.47
M600-03400078A	3	7.8	3	5	12.1	15.6	10.4	4	5	11.44
M600-03400100A	3	10	4	5	15.6	20	12.3	5.5	7.5	13.53
M600-03400135A	3	13.5	5.5	7.5	31.5	40.5	13.5	5.5	7.5	40.5
M600-03400160A	3	16	5.5	10	37.3	48	16	5.5	10	48
M600-04400150A	4	15	5.5	10	23.3	30	18.5	7.5	10	20.35
M600-04400172A	4	17.2	7.5	10	26.8	34.4	24	11	15	26.4
M600-05400220A	5	22	9	15	34.2	44	27	11	20	29.7
M600-05400270A	5	27	11	20	42	54	30	15	20	33
M600-05400300A	5	30	15	20	46.7	60	31	15	20	34.1
M600-06400350A	6	35	15	25	54.4	70	38	18.5	25	41.8
M600-06400420A	6	42	18.5	30	65.3	84	48	22	30	52.8
M600-06400470A	6	47	22	30	73.1	94	63	30	40	69.3
M600-07400660A	7	66	30	50	102.7	132	79	37	50	86.9
M600-07400770A	7	77	37	60	119.8	154	94	45	60	103.4
M600-07401000A	7	100	45	75	155.6	200	112	55	75	123.2
M600-08401340A	8	134	55	100	208.4	268	155	75	100	170.5
M600-08401570A	8	157	75	125	244.2	314	184	90	125	202.4
M600-09402000A/E	9	200	90	150	272.2	350	221	110	150	243.1
M600-09402240A/E	9	224	110	150	304.9	392	266	132	200	292.6

Product Code*	Frame Size	Heavy Duty					Normal Duty			
		Rated Current (A)	Motor Shaft Power		Peak Current Open Loop (A)	Peak Current RFC (A)	Rated Current (A)	Motor Shaft Power		Peak Current (A)
			(kW)	(HP)				(kW)	(HP)	
M600-10402700E	10	270	132	200	367.5	472.5	320	160	250	352
M600-10403200E	10	320	160	250	435.6	560	361	200	300	397.1
M600-11403770E	11	377	185	300	513.1	659.75	437	225	350	480.7
M600-11404170E	11	417	200	350	567.6	729.75	487	250	400	535.7
M600-11404640E	11	464	250	400	631.6	812	507	315	450	557.7
575 V (500 - 575 V ± 10 %)										
M600-05500030A	5	3	1.5	2	4.7	6	3.9	2.2	3	4.29
M600-05500040A	5	4	2.2	3	6.2	8	6.1	4	5	6.71
M600-05500069A	5	6.9	4	5	10.7	13.8	10	5.5	7.5	11
M600-06500100A	6	10	5.5	7.5	15.6	20	12	7.5	10	13.2
M600-06500150A	6	15	7.5	10	23.3	30	17	11	15	18.7
M600-06500190A	6	19	11	15	29.6	38	22	15	20	24.2
M600-06500230A	6	23	15	20	35.8	46	27	18.5	25	29.7
M600-06500290A	6	29	18.5	25	45.1	58	34	22	30	37.4
M600-06500350A	6	35	22	30	54.4	70	43	30	40	47.3
M600-07500440A	7	44	30	40	68.4	88	53	45	50	58.3
M600-07500550A	7	55	37	50	85.6	110	73	55	60	80.3
M600-08500630A	8	63	45	60	98	126	86	75	75	94.6
M600-08500860A	8	86	55	75	133.8	172	108	90	100	118.8
M600-09501040A/E	9	104	75	100	141.6	182	125	110	125	137.5
M600-09501310A/E	9	131	90	125	178.3	229.25	150	110	150	165
M600-10501520E	10	152	110	150	206.9	266	200	130	200	220
M600-09501310A/E	9	131	90	125	178.3	229.25	150	110	150	165
M600-10501520E	10	152	110	150	206.9	266	200	130	200	220
M600-09501310A/E	9	131	90	125	178.3	229.25	150	110	150	165
M600-10501520E	10	152	110	150	206.9	266	200	130	200	220
690 V (500 - 690 V ± 10 %)										
M600-07600190A	7	19	15	20	29.6	38	23	18.5	25	25.3
M600-07600240A	7	24	18.5	25	37.3	48	30	22	30	33
M600-07600290A	7	29	22	30	45.1	58	36	30	40	39.6
M600-07600380A	7	38	30	40	59.1	76	46	37	50	50.6
M600-07600440A	7	44	37	50	68.4	88	52	45	60	57.2
M600-07600540A	7	54	45	60	84	108	73	55	75	80.3
M600-08600630A	8	63	55	75	98	126	86	75	100	94.6
M600-08600860A	8	86	75	100	133.8	172	108	90	125	118.8
M600-09601040A/E	9	104	90	125	141.6	182	125	110	150	137.5
M600-09601310A/E	9	131	110	150	178.3	229.25	155	132	175	170.5
M600-10601500E	10	150	132	175	204.2	262.5	172	160	200	189.2
M600-10601780E	10	178	160	200	242.3	311.5	197	185	250	216.7
M600-11602100E	11	210	185	250	285.8	367.5	225	200	250	247.5
M600-11602380E	11	238	200	250	323.9	416.5	275	250	300	302.5
M600-11602630E	11	263	250	300	358	460.25	305	315	400	335.5

CONTROL TECHNIQUES

Nidec

© 2021 Nidec Control Techniques Limited. The information contained in this brochure is for guidance only and does not form part of any contract. The accuracy cannot be guaranteed as Nidec Control Techniques Ltd have an ongoing process of development and reserve the right to change the specification of their products without notice.

Nidec Control Techniques Limited. Registered Office: The Gro, Newtown, Powys SY16 3BE. Registered in England and Wales. Company Reg. No. 01236886

Part No. 0781-0645-01 10/21