F600 HIGH IP



SIMPLE, RELIABLE FLOW CONTROL

F600 High IP Highlights

Standard and High IP drives

The High IP drive will already be familiar to users of the F600, with all the same features that make commissioning effortless. The Hand-Off-Auto keypad with the built-in real-time clock is still available, sealed, and the protective casing has been designed with easy servicing and usability in mind.

IP65 rated enclosure.

Save on installation

The F600 High IP drive is enclosed in a sturdy, protective yet light casing, providing a compact solution. This not only allows easy integration in harsh environments but wall mounting close to the pump reduces installation costs, through:

- No cabinet required
- Shorter cable lengths
- Less labour time/cost to install drive

KEY FUNCTIONS

Function		Function	
Pump multi-leader mode for up to 3 drives	✓	Low DC link operation	✓
Pump cascade mode for up to 4 assist pumps	✓	Analogue inputs	2
Control mode: Induction motor operation	✓	Analogue outputs	2
Control mode: Permanent magnet motor operation	✓	Temperature monitoring	✓
Pump pipe fill mode	✓	Digital inputs	3-6
Pump dry well detection	✓	Digital outputs	0-3
Pump low load detection	✓	Relays (normally open/normally closed)	2
Pump no-flow detection	✓	Optional motorised potentiometer	✓
Pump over-cycle protection	✓	PID Control	2
Pump cleaning function	✓	Energy meter	✓
Hand/Off/Auto control	✓	Trip time stamping	✓
Pump volume monitoring	✓	Trip logging	10
Pump flow monitoring	✓	Run time log	✓
Pump Wake/sleep operation	✓	Control word control	✓
Pump flow switch input	✓	Auto reset	✓
Pump assist over-cycle detection	✓	Cloning	✓
Auto-tune static	✓	SD card adapter	✓
Stop mode: Coast	✓	SMARTCARD	✓
Stop mode: Fast ramp		Acceleration rates	4
Motor pre-heat mode	✓	Deceleration rates	4
Bi-polar reference	✓	Skip frequency dead bands	✓
Skip frequencies	✓	Guided set-up via 'Connect' commissioning software	✓
Fire Mode configurable over-ride function	✓	Sleep Mode	✓
HMI support	✓	Supply loss detection	✓

SPECIFICATION

F600	
Items supplied with the drive	Step-By-Step Guide, safety information, grounding bracket, grounding clamp, DC terminal cover grommets, terminal nuts, supply and motor connector, surface mounting brackets, control terminals, relay connectors, 24Vpower supply connector, finger guard grommets, IP65 cover and IP65 mounting brackets
Storage temperature	-40°C to 55°C, -40°F to 131°F
Operating temperature without de-rate	-20°C to 40°C, -4°F to 104°F
Operating temperature with de-rate	40°C to 55°C, 104°F to 131°F
Supply requirements	Maximum supply imbalance: 2 % negative phase sequence (equivalent to 3 % voltage imbalance between phases). Input frequency 45 to 66Hz
Switching frequency range	2,3,4,6,8,12,16kHz (Factory default = 3kHz)
Approvals	CE (European Union), cUL Listed (USA and Canada), RCM (Australia/ New Zealand), EAC (Russian Customs Union)
Product safety standard	EN61800-5-1
Functional safety (Dual STO function)	TuV
Altitude	1000m – No de-rate. 1000m to 3000m - 1% de-rate/100m
Humidity	95% Non-condensing
Pollution	Degree 2. Dry, non-conducting pollution only
IP Rating	IP65
Vibration	Reference standard IEC60068-2-29 bump test, IEC60068-2-64 random vibration test, IEC60068-2-6, EN61800-5-1 sinusoidal vibration test.
Mounting methods	Surface mount or through-panel mount via mounting brackets
Output frequency/speed range	599Hz
Braking	In-built braking transistor, external resistor required.
Operating modes	Open-loop, RFC-A (enhanced open-loop performance) RFC-S (permanent magnet motor)
Overload capability	110% for 165s from cold or for 9s from 100% load
Overvoltage category	Evaluated for OVC III.

Corrosive environments	Concentrations not exceeding levels set in: EN 50178:1998 Table A2 IEC 60721-3-3 Class 3C2
Immunity Compliance	IEC61800-3, EN60800-6-2, IEC 61000-4-2, IEC 61000-4-3, IEC61000-4-4, IEC61000-4-5, IEC61000-4-6, IEC61000-4-11, IEC61000-6-1, IEC 61000-6-2.
Emission compliance	Capable of meeting the requirements of Equipment Category C3 without external filters or line reactors. Capable of meeting the requirements of Equipment Category C2 when installed with the recommended filters and line reactors. IEC61800-3, EN61000-6-4, EN61000-3-2, EN61000-3-12, EN61000-3-3, EN12015
Cooling	Forced cooled
Safe Torque off	Single STO. SIL 3
Communications	RS485, MODBUS RTU, PROFIBUS, Ethernet, EtherCAT, DeviceNET, CANopen and PROFINET
Control I/O	2 x analog input, 2 x analog outputs, 3 x Digital I/O programmable, 3 x Digital input, 2 x NO relay 250Vac Max., 5 x 0V common, 1 x 24V user output, 1 x 24V external input, 1 x STO input. Additional I/O available with SI-I/O option module.
Accuracy	Frequency 0.01%, Analogue input 1 and 2: 11 bits plus sign, Current accuracy typical 2%.
On-Board user program capability	N/A
Keypad (LCD)	KI- HOA keypad RTC (real time clock), optional HOA Remote Keypad
PC Tools	'Connect' commissioning and cloning tool including CT Oscilloscope, Machine Control Studio for second processor module programming.
Warranty	5 years
Supported options	HMI, Remote Keypad RTC, SI-I/O, Remote I/O, SI-Encoder (speed feedback), SI-Universal Encoder, MCi200 (second processor), MCi210 (second processor), SI-Ethernet, SI-EtherCAT, SI-DeviceNET, SI-PROFIBUS, SI-PROFINET, SI-POWERLINK, SI-CANopen, KI-485 comms adapter, SD card adapter, SMARTCARD
Accessories	External EMC filters

Documentation & Downloads

Product documentation and PC tools available for download from:
www.controltechniques.com/support

DIMENSIONS



Frame Size	Overall Dimensions						Mounting Dimensions				Mounting Hole Diameter		Weight	
	mm			in			mm		in		mm	in	kg	lb
	H	W	D	H	W	D	H	W	H	W				
3	571.4	255.8	220.7	22.49	10.7	8.7	465.5	73	18.32	2.87	4 x 6	0.23	7.5	16.5
4	571.4	255.8	220.7	22.49	10.7	8.7	470	106	18.5	4.17	4 x 7	0.27	9.3	20.5
5	570.7	255.8	220.7	22.46	10.7	8.7	467	110	18.38	4.38	4 x 7	0.27	10.0	22.0
6	573.79	316.68	247.3	22.59	9.73	9.8	478	196	18.81	7.72	6 x 7	0.27	16.9	37.3

CONNECTIONS

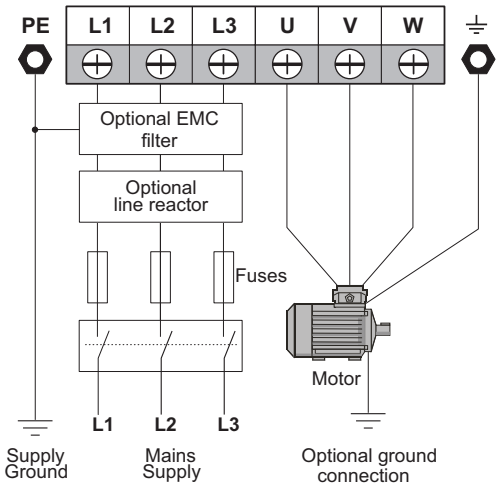

Typical Power Connections

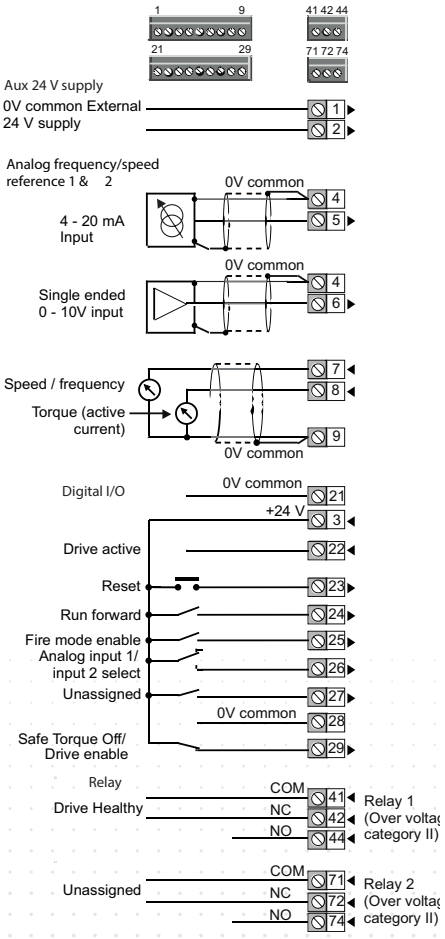

Default Control Connections

PART NUMBERS

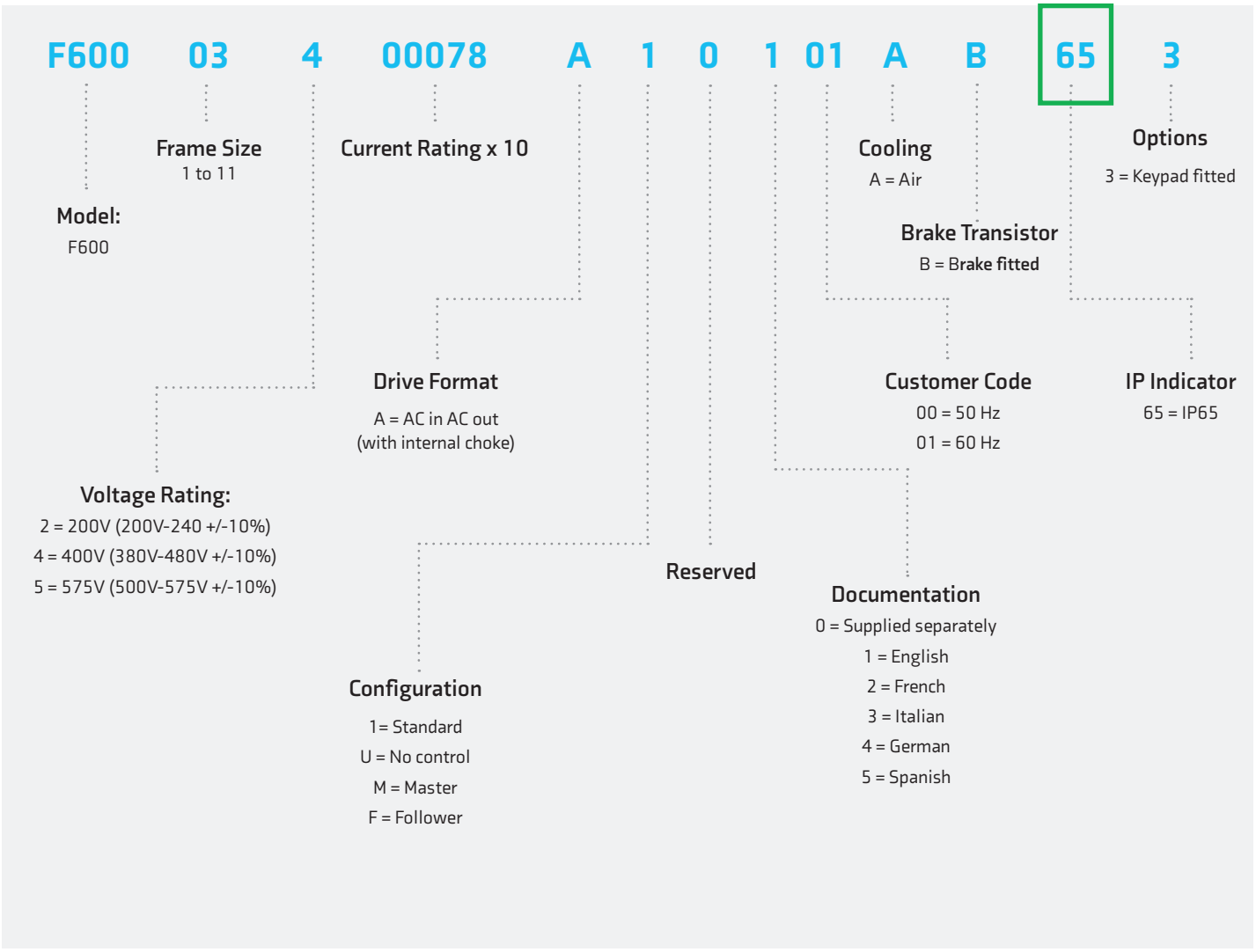

MODEL NUMBER AND RATINGS

200/240 Vac ±10%				
Product Code	Normal Duty			
	Frame size	Max continuous current (A)	Motor shaft power (kW)	Motor shaft power (hp)
F600-03200066	3	6.6	1.1	1.5
F600-03200080	3	8	1.5	2
F600-03200110	3	11	2.2	3
F600-03200127	3	12.7	3	3
F600-04200180	4	18	4	5
F600-04200250	4	22	5.5	7.5
F600-05200300	5	30	7.5	10
F600-06200500	6	50	11	15

380/480 Vac ±10%				
Product Code	Normal Duty			
	Frame size	IP20 Max continuous current (A)	Motor shaft power (kW)	Motor shaft power (hp)
F600-03400034	3	3.4	1.1	1.5
F600-03400045	3	4.5	1.5	2
F600-03400062	3	6.2	2.2	3
F600-03400077	3	7.7	3	5
F600-03400104	3	10.4	4	5
F600-03400123	3	11	5.5	7.5
F600-04400185	4	18.5	7.5	10
F600-04400240	4	21	11	15
F600-05400300	5	29	15	20
F600-06400380	6	38	18.5	25
F600-06400480	6	48	22	30

500/575 Vac ±10%				
Product Code	Normal Duty			
	Frame size	IP20 Max continuous current (A)	Motor shaft power (kW)	Motor shaft power (hp)
F600-05500039	5	3.9	2.2	3
F600-05500061	5	6.1	4	5
F600-05500100	5	10	5.5	7.5
F600-06500120	6	12	7.5	10
F600-06500170	6	17	11	15
F600-06500220	6	22	15	20
F600-06500270	6	27	18.5	25
F600-06500340	6	34	22	30

© 2021 Nidec Control Techniques Limited. The information contained in this brochure is for guidance only and does not form part of any contract. The accuracy cannot be guaranteed as Nidec Control Techniques Ltd have an ongoing process of development and reserve the right to change the specification of their products without notice.

Nidec Control Techniques Limited. Registered Office: The Gro, Newtown, Powys SY16 3BE. Registered in England and Wales. Company Reg. No. 01236886

Part No. 0781-0721-01 10/21