DIGITAX SF



EASY TO USE,
LOW POWER SERVO SOLUTIONS

0.05 kW - 2 kW | 200 V

Digitax SF Highlights

- Magnetic encoder technology
- Versatile analogue or pulse train interface
- Built-in keypad
- Standalone operation
- PC-USB interface
- Multiple motor inertia levels available

KEY FUNCTIONS

Function		Function	
Operation mode: Position	✓	Command Mode: Pulse Train (Position)	✓
Operation mode: Velocity	✓	Command Mode: Analog (Velocity, Torque)	✓
Operation mode: Torque	✓	Command Mode: Internal (Position, Velocity)	✓
Pulse train input pulse form: Pulse/Direction	✓	Pulse train input pulse form: Quadrature Encoder Pulse	✓
Pulse train input pulse form: CCW/CW	✓	Analog Input Filter	✓
Position Command Filter	✓	Torque Limit	✓
Torque Command Filter	✓	Inching	✓
Jog	✓	Supply loss detection	✓
Bi-polar analog reference	✓	Analogue input control	✓
Internal Pre-set speeds	8	Homing to sensor	✓
Internal Point Moves	16	Homing to encoder z-pulse	✓
Homing to torque limit/stopper	✓	Temperature monitoring	✓
Acceleration Rates (Mode Dependent)	1 to 16	Digital input control	✓
Deceleration Rates (Mode Dependent)	1 to 16	Digital output control	✓
Command pulse frequency RS-422 max	4Mpps	Limit switch control	✓
Command pulse frequency open-collector max	200kpps	Analog Input filters	✓
Auto-tune rotating	✓	Pulse train input filter	✓
Energy meter	✓	Run time log	✓
Alarm time stamping	✓	Alarm logging	10
Auto reset	✓	Control word control	✓
Cloning	✓	Mechanical brake controller	✓
Stop mode: Coast	✓	Stop Mode: Emergency Stop Brake	✓
Stop mode: Quick Stop	✓	Stop mode: Short Brake	✓

DRIVE SPECIFICATION

Digitax SF	
Items supplied with the drive	Safety information, power input connector, encoder connector
Storage temperature	-20°C to 65°C, -4°F to 149°F
Operating temperature without de-rate	0°C to 50°C, 32°F to 122°F
Operating temperature with de-rate	N/A
Supply requirements	Maximum supply imbalance: 2 % negative phase sequence (equivalent to 3 % voltage imbalance between phases). Input frequency 45 to 66Hz
Switching frequency range	N/A
Approvals	CE (European Union), UL (508C if installed in appropriate environment), KC (Korea)
Product safety standard	EN61800-5-1
Functional safety (Dual STO function)	N/A
Altitude	≤1000m
Humidity	20 – 85% RH or less (Non-condensing)
Pollution	Degree 2. Dry, non-conducting pollution only
IP Rating	IPXX – Pollution degree 2
Vibration	≤5.8m/s (0.6G) 10 to 60Hz (no continuous operation allowed at resonant frequency
Mounting methods	Surface mount, mounting holes only
Output frequency/speed range	0 - 500Hz (50W - 750W), 0 – 250Hz (1kW – 2kW)
Braking	Mechanical brake control, no internal braking resistor but an external emergency stop braking unit can be fitted
Operating modes	Position, Velocity, Torque
Overload capability	350% (50W to 100W), 300% (200W to 2kW)
Overvoltage category	II
Corrosive environments	Never use the product in an environment containing explosive or flammable gases, chloride, acidic or alkaline corrosive environment such as sulfur dioxide, chlorine, ammonia and so on
Immunity Compliance	EN 61000-6-2:2005
Emission compliance	EN55011:2009+A1:2010
Cooling	Forced cooled
Safe Torque off	None
Communications	RS-485

Control I/O	1 x Analogue Input, 1 x Analog Ground 8 x Digital Input Programmable, 6 x Digital Output, 2 x independent digital output, 1 x Control 24V Power Input, 1 x Control Ground, 1 x I/O COM +, 1 X I/O COM-, 7 x simulated encoder output, 3 x RS485 terminals, 8 x Position Pulse Inputs
Accuracy	Command pulse -paired ratio: 1/1000 < A/B < 1000, Analogue input: Single Ended ±10V
On-Board user program capability	N/A
Keypad	Fixed LED keypad
PC Tools	'Digitax SF Connect' commissioning, waveform monitor and point table setup.
Warranty	2 years
Supported options	N/A
Accessories	Input / Output (I/O) terminal block and cable assembly; Input / Output Interface Connector; Surge absorber / protector; EMC filter
Encoder	17-bit single or multi-turn (incremental)
Encoder Multi-turn count	65536

Documentation & Downloads

Product documentation and PC tools available for download from:
www.controltechniques.com/support

DIMENSIONS



Frame Size	Overall Dimensions						Mounting Dimensions				Mounting Hole Diameter		Weight	
	mm			in			mm		in		mm	in	kg	lb
	H	W	D	H	W	D	H	W	H	W				
1	160	40	130	6.3	1.57	5.12	150	30	5.91	1.18	5.5	0.22	0.7	1.54
2	160	48	130	6.3	1.89	5.12	150	30	5.91	1.18	5.5	0.22	0.8	1.76
3	160	68	130	6.3	2.68	5.12	150	44	5.91	1.73	5.5	0.22	1	2.2
4	160	84	130	6.3	3.31	5.12	150	61.7 / 69 *	5.91	2.72 / 2.43	5.5	0.22	1.6	3.53

*** Mounting hole separation: 61.7mm at the top, 69mm at the bottom**

CONNECTIONS

Typical Power Connections

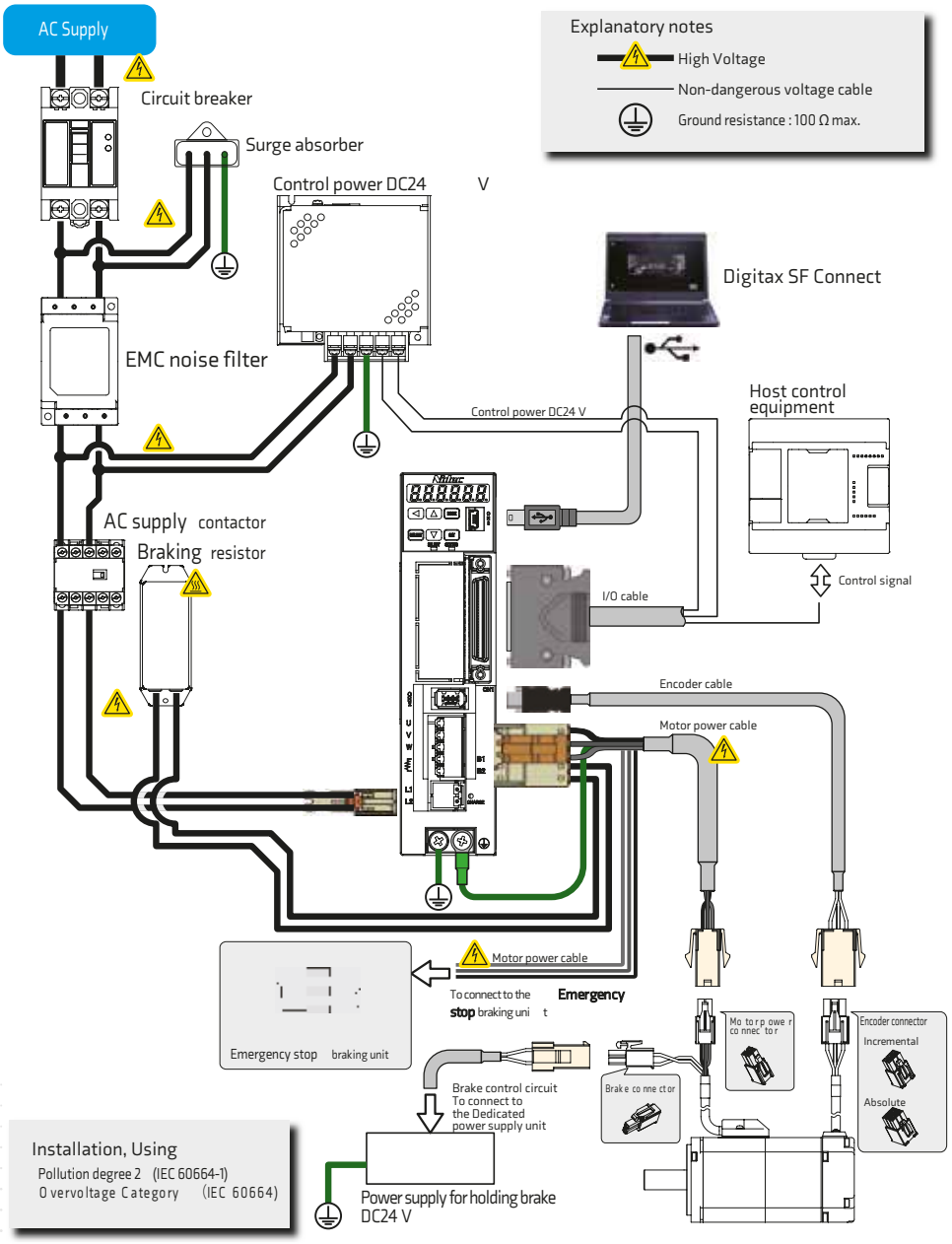

DEFAULT CONTROL CONNECTIONS

Pulse Train Command

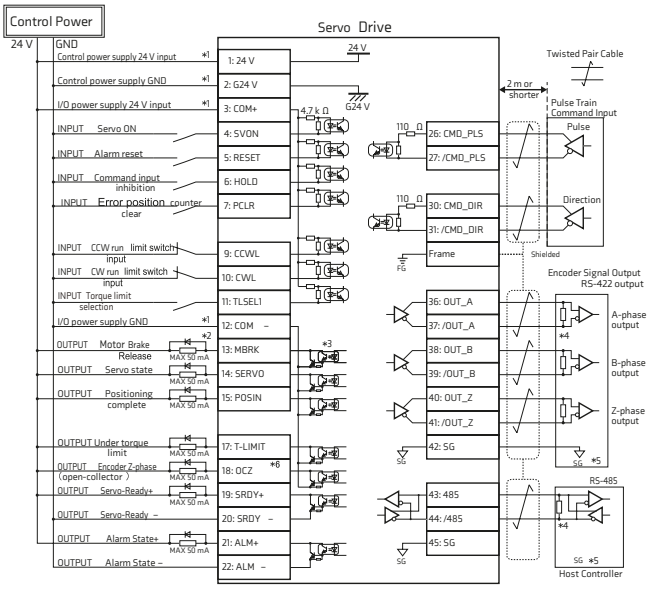

Analog Velocity Command

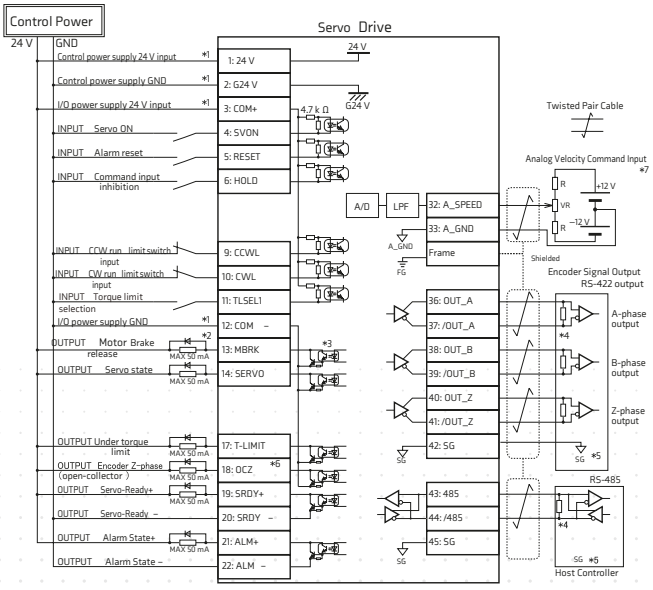

DRIVE PART NUMBER

DA

Series

2

Input Power Supply:
2: AC 200V-240V
(50W - 750W: Single-phase)
1kW: Single-phase/three-phase
1.5kW, 2kW: Three-phase

Y

Compatible Motor:
Y: Mx500x2xx, Z: Mx101x2xx
1: Mx201x2xx, 2: Mx401x2xx
3: Mx751x2xx, 4: Mx102x2xx
6: Mx152x2xx, 8: Mx202x2xx

Z

Main Circuit Power Supply:
Z: 50W, 1: 100W, 2: 200W, 4: 400W,
8: 750W, A: 1kW, B: 1.5kW, C: 2kW

DRIVE RATINGS

Model No.	Frame Size	Supply Phases	Rated Current (A)	Motor Power (kW)	Motor Power (hp)	Compatible Motor		
						Model No.	Motor Flange Size (mm)	Motor Inertia
200V (200-240V +/-10%)								
DA2YZ	1	1	0.7	0.05	0.07	Mx500x2xx	40	Middle
DA2Z1	1	1	1	0.1	0.13	Mx101x2xx	40	Middle
DA212	1	1	1.7	0.2	0.27	Mx201x2xx	60	Low, High
DA224	1	1	2.7	0.4	0.53	Mx401x2xx	60	Low, High
DA238	2	1	4.3	0.75	1	Mx751x2xx	80	Low, High
DA24A	3	1 / 3	5.6	1	1.3	Mx102x2xx	130	Middle, High
DA26B	4	3	9.9	1.5	2	Mx152x2xx	130	Middle, High
DA28C	4	3	12.2	2	2.7	Mx202x2xx	130	Middle

DIGITAX SF MOTOR

MOTOR SPECIFICATION

Digitax SF Motor	
Ambient temperature for operation	0 to 40°C
Ambient humidity for operation	20 to 85% RH (no condensation)
Ambient temperature for storage	-20 to 65°C (no condensation)
	(not subjected to direct sunlight) 80°C for 72 hours
Ambient humidity for storage	20 to 85% RH (no condensation)
Atmosphere for operation/storage	Indoors (not subject to direct sunlight)
	Free from corrosive gases, flammable gases, oil must, dust, flammables, grinding fluid
Insulation resistance	≥5MΩ at 1,000VDC
Dielectric strength	AC 1500V for one minute across the primary Ground/Earth FG
Operating altitude	≤1000m
Vibration class	V15 (JEC2121)
Vibration resistance	49m/s2 (5G)
Impact resistance	98m/s2 (10G)
Protective structure	IP65: 50W to 750W
	IP67: 1kW to 2kW
Electric shock protection	Class I (Mandatory grounding)
Overvoltage category	II
Installation environment	Pollution degree 2

Documentation & Downloads

Product documentation and PC tools available for download from:
www.controltechniques.com/support

Digitax SF Encoder	Mxxxxx2xN	Mxxxxx2xA
Resolution	Incremental 17-bit	Absolute 17-bit
Ambient operating temperature	0 to 85°C	
External disturbance magnetic field	±2mT (20G) or below	
Power supply voltage	DC 4.5 to 5.5V (Power supply ripple ≤5%)	
Power supply current consumption	160mA (Not including inrush current)	
External battery voltage	-	DC 2.4 to 4.2V
External battery current consumption	-	10μA
Multi-turn count	-	65,536 counts
Maximum revolving speed	6,000rpm	
Count-up direction	Counter-clockwise viewed from load-side shaft end	
Input/output type	Differential	
Communication transmission method	Half-duplex asynchronous serial communication	
Communication speed	2.5Mbps	

MOTOR PART NUMBER

MX		201		N		2		S			N	
Code	Series	Code	Rated Output	Code	Holding Brake	Code	Voltage Specification	Code	Shaft End	Oil Seal	Code	Encoder Type
MX	Low Inertia	500	50W	N	Without	2	AC200V to 240V	S (P)	Straight	Without	N	17bit (incremental)
		101	100W									
MY	Middle Inertia	201	200W					K (H)	Key	Without		
		401	400W									
MM		751	750W	A	With			T (R)	Straight	With	A	17bit (absolute)
MZ	High Inertia	102	1kW									
		152	1.5kW					L (J)	Key	With		
MH		202	2kW									

MOTOR RATINGS

		MY500x2xx	MY101x2xx	MX201x2xx	MZ201x2xx	MX401x2xx	MZ401x2xx	MX751x2xx	MZ751x2xx	MM102x2xx	MH102x2xx	MM152x2xx	MH152x2xx	MM202x2xx
Item	Units													
Inertia level	-	Middle	Middle	Low	High	Low	High	Low	High	Middle	High	Middle	High	Middle
Fitting flange size	mm	40 sq.		60 sq.				80 sq.				130 sq.		
Motor length (without brake or oil seal)		66.4	82.4	76.5		93.5		110.5	107.3	122.3	128	163	145.5	180.5	163
Motor length (without brake, with oil seal)		72	88											
Motor length (with brake, without oil seal)		106.8	122.8	113		130		147	144.3	159.3	153	188	170.5	205.5	188
Motor length (with brake and oil seal)		112.4	128.4											
Approximate mass (without brake)	kg	0.4	0.5	0.8	1	1.3	1.5	2.2	2.5	5.6	7.6	7	9	8.4
Approximate mass (with brake)	kg	0.6	0.8	1.3	1.5	1.8	2	3	3.3	7	9	8.4	10.4	9.8
Compatible drive model number	-	DA2YZ	DA2Z1	DA212		DA224		DA238		DA24A		DA26B		DA28C
Voltage	V	AC200 to 240V												
Rated output power	W	50	100	200		400		750		1000		1500		2000
Rated torque	Nm	0.16	0.32	0.64		1.27		2.39		4.77		7.16		9.55
Instantaneous maximum torque	Nm	0.56	1.12	1.91		3.82		7.1		14.3		21.5		28.6
Rated current (stall current)	A	0.68	0.97	1.7		2.7		4.2		5.6		9		11.9
Instantaneous maximum current	A	2.4	3.3	5.2		8.5		12.2		16.8		27		35.7
Rated revolving speed	rpm	3000										2000		
Maximum revolving speed	rpm	6000										3000		
Torque constant	Nm/A	0.25	0.35	0.41		0.49		0.63		0.88		0.81		0.85
Induced Voltage Constant per Phase	mV/rpm	8.8	12.3	14.3		17.1		21.9		30.9		28.4		29.6
Rated power rate (without brake)	kW/s	6.5	16.5	28.2	9.1	69.4	23	76.6	35.4	50	9.2	76.9	13.8	104.9

		MY500x2xx	MY101x2xx	MX201x2xx	MZ201x2xx	MX401x2xx	MZ401x2xx	MX751x2xx	MZ751x2xx	MM102x2xx	MH102x2xx	MM152x2xx	MH152x2xx	MM202x2xx
Item	Units													
Rated power rate (with brake)	kW/s	5.4	14.6	23.5	8.6	61.8	22.1	60.7	31.6	36.5	8.6	61.4	13.3	87.9
Mechanical time constant (without brake)	ms	1.92	1.17	0.72	2.23	0.47	1.42	0.4	0.86	0.76	4.17	0.6	3.32	0.58
Mechanical time constant (with brake)	ms	2.31	1.32	0.87	2.38	0.53	1.47	0.5	0.96	1.05	4.43	0.75	3.46	0.69
Electrical time constant	ms	0.74	0.89	2.53		2.92		4.6		10.1		12.2		12.2
Rotor moment of inertia (without brake)	x10-4 kgm2	0.039	0.061	0.14	0.44	0.23	0.71	0.74	1.61	4.56	24.9	6.67	37.12	8.7
Rotor moment of inertia (with brake)	x10-4 kgm2	0.047	0.069	0.17	0.47	0.26	0.73	0.94	1.81	6.24	26.4	8.35	38.65	10.38
Permissible radial load	N	68			245			392				490		
Permissible axial load	N	58			98			147				196		

BRAKE RATINGS

		MY500A2xx	MY101A2xx	MX201A2xx	MZ201A2xx	MX401A2xx	MZ401A2xx	MX751A2xx	MZ751A2xx	MM102A2xx	MH102A2xx	MM152A2xx	MH152A2xx	MM202A2xx
Item	Units													
Usage	-	Holding												
Rated voltage	V	DC 24V ± 10%												
Rated current	A	0.25			0.3			0.4				1.0		
Static friction torque	Nm	≥0.16	≥0.32		≥1.27			≥2.39				≥9.55		
Engage time	ms	≤35			≤50			≤70				≤120		
Release time	ms	≤20			≤15			≤20				≤30		
Release voltage	V	≥DC 1V												

WWW.CONTROLTECHNIQUES.COM

© 2021 Nidec Control Techniques Limited. The information contained in this brochure is for guidance only and does not form part of any contract. The accuracy cannot be guaranteed as Nidec Control Techniques Ltd have an ongoing process of development and reserve the right to change the specification of their products without notice.

Nidec Control Techniques Limited. Registered Office: The Gro, Newtown, Powys SY16 3BE. Registered in England and Wales. Company Reg. No. 01236886

Part No. 0781-0680-01 10/21