CONTROL TECHNIQUES

COMMANDER S



5 YEAR FREE WARRANTY

MAKING SIMPLE APPLICATIONS, SIMPLE.

0.18 to 4 kW (0.25 to 5 hp)
1Φ 100 & 200 V, 3Φ 200 & 400 V
Linear V to F, Square V to F, Resistance Compensation

Commander S Highlights

Easy to install

The sleek curved design of Commander S optimises component layout for a small footprint and easy access to terminals. The click-on/click-off DIN rail mount makes installation remarkably easy.

Easy to use

Using our new Marshal app (Android/iOS) your drive can be configured in under 60 seconds.

Reliable

Durability is at the core of Commander S design, guaranteeing performance throughout its whole lifetime.

Cost effective

Equipped with unique features designed to save you time, energy and money.

COMMANDER S100 DRIVE SPECIFICATIONS

Power & Control	
Supply Requirements	100 V drive: 100 V to 120 V ±10 % 200 V drive: 200 V to 240 V ±10 % 400 V drive: 380 V to 480 V ±10 % Maximum supply imbalance: 2 % negative phase sequence (equivalent to 3 % voltage imbalance between phases)
Power Range	0.18 to 4 kW / 0.25 to 5 hp
Supply Frequency Range	45 to 66 Hz
Output Frequency/Speed Range	0 to 300 Hz
Switching Frequency	4 kHz or 12 kHz
Heavy Duty Overload Capability	150 % for 60 s (from cold), 150 % for 8 s (from hot)
Operating Modes	Linear V to F, Square V to F, Resistance Compensation
Stopping Modes	Coast, Ramp, Ramp & DC Injection Braking, DC Injection Braking with 0 Hz detect, Timed DC Injection Braking, Distance Stop
Communication & Interfaces	
Communications	RJ45 for Modbus RTU, NFC for app interface
Keypads	Fixed LED keypad, Remote IP66 Keypad (available as an accessory) HMI (available as an accessory)
User Software Tools (Free To Download)	Marshal (Mobile App), Connect (PC commissioning tool)
Inputs & Outputs	
Analogue	2 x Analogue input Possible settings: 0-10 V, 0-20 mA, 4-20 mA (No Alarm), 4-20 mA (Alarm), 4-20 mA (Error), Digital 1 x Analogue output Possible settings: 0-10 V, 0-20 mA, 4-20 mA
Digital	4 x Digital inputs (1 frequency input) 1 x Digital input / output (can be used as a frequency or PWM output to represent analog value)
Digital Input Logic	Positive or Negative input logic (PNP or NPN sensors)
Relay	1 x Relay (single pole, double throw relay)
Resolutions	Output frequency resolution: 0.1 Hz Analogue input 1: 11 bit Analogue input 2: 11 bit Current: The resolution of the current feedback is 10 bit plus sign
Mounting & Environment	
IP Rating	IP20
Storage Temperature	-40 °C to 60 °C (-40 °F to 140 °F)
Operating Temperature Without De-Rate	-10 °C to 40 °C (14 °F to 104 °F)
Operating Temperature With De-Rate	-10 °C to 60 °C (14 °F to 140 °F)
Cooling	Natural convection (frame 1 ≤0.25 kW / 0.33 hp), Integral cooling fan (all other drives)
Altitude	≤3000 m (1000 m to 3000 m derate 1 % over 100 m)
Humidity	95 % non-condensing at 40 °C / 104 °F - EN61800-2(3k3)
Pollution	Pollution degree 2 - dry, non-conducting pollution only

Mounting & Environment continued	
Vibration	Tested to IEC 60068-2-6
Mounting Methods	Surface mount, click on/click off DIN rail mount
Mounting Clearance	0 mm either side, 45 mm above and below (100 mm above and below for frame 1 drives ≤0.25 kW / 0.33 hp)
Overvoltage Category	Category III (IEC/EN/KN/UL 61800-5-1)
Corrosive Environments	EN 60721-3-3 ISO9223 Class C3
Maximum Motor Cable Length	50 m (All variants)
Standards	
Approvals	CE, UKCA, cUL, C-Tick, EAC, KC
	
Product Safety Standards	IEC/EN/KN/UL 61800-5-1, CSA C22.2 No.274, GB12668.501-2013,
Product Emc Standards	IEC/EN/KN 61800-3 Adjustable speed electrical power drive systems, Part 3: EMC requirements and specific test methods GB12668.3-2012
Immunity Compliance	Second environment (Industrial)
Emission Compliance	Category C3 (internal filters only) Category C1 & C2 (external EMC filters) Category C1, (internal filters only, for selected 1Φ 200 V variants)
Generic Immunity Compliance	EN61000-6-1: Generic immunity standard for residential, commercial and light industrial environments EN 61000-6-2: Generic immunity standard for industrial environments
Generic Emission Compliance	EN 61000-6-4: Generic emission standard for industrial environments
Emission Compliance for Motor Cable Length up to 50 m	C2 with an external filter
Emission Compliance for Motor Cable Length up to 20 m	C1 with an external filter C3 without a filter
Emission Compliance for Motor Cable Length up to 5 m	C1 only for drive variants with internal C1 filter (S100-xxxx1)
Warranty	
Warranty	5 Years (warranty terms and conditions apply)
Accessories	
Remote Interfaces	Remote keypad IP66, HMI
Filters & Cables	EMC filter, Cable management bracket, CT comms cable
Environmental Protection	Fibre filter
Protection	
Conformal Coating	100 % Coverage nano-coating
DC Bus Undervoltage Error Level	100 V Drives= 175 V 200 V Drives = 175 V 400 V Drives = 330 V
DC Bus Overvoltage Error Level	100 V Drives = 400 V 200 V Drives = 400 V 400 V Drives = 800 V
Instantaneous Overcurrent Error/Limit	150 % Motor Rated Current (Programmable)
Phase Loss Error	DC Bus Ripple Threshold Exceeded
Overtemperature Error	Control Board Over Temperature, Inverter Model Temperature, Inverter Thermistor Temperature
Short Circuit Error	Protection against output phase-to-phase fault.
Motor Thermal Protection	Electronically protects the motor from over-heating due to loading conditions
Fire Mode	Run at a set frequency ignoring selected errors
Keep Running	Parameter defaults set to avoid errors and machine downtime.

FUNCTIONALITY

Marshal	
Offline Programming	Program the drive while it is still in the box
Cloning	Clone parameter sets from one drive to another
Faststart	Guided commissioning and motor rotation verification test
Guided Diagnostics	Easy fault finding
Parameter File Storage	Save parameter files to the device or cloud for future use
Share Project Configuration	Share to colleagues or to Control Techniques Technical Support for diagnostics
Pdf Parameter Set	Useful for sharing parameter sets for quick review
Wiring Diagram	Automatically generate a printable pdf of a custom wiring diagram for your installation
Non-Default Parameter	Show the parameters that have been changed from their default setting
Favourite Parameters	Favourite parameters visited often
Guides And Manuals	Quick access to drive documentation

Modbus RTU Communications	Logic function control
Control Word Control	✓
Cloning	✓
Serial Baud Rate	600 to 115000 bps
Modbus Rtu Protocol	8.2NP, 8.1NP, 8.1EP, 8.1OP

Reference	
Selectable References	4
Jog Reference	✓
Up / Down % Reference (Motorised Pot)	✓
Bi-Polar Reference	✓
Preset Speeds	4
Skip Frequencies	1
Skip Frequencies Dead Band	✓
Local/Remote	✓
S-Ramp	✓
Acceleration Rates	2
Deceleration Rates	2
Frequency Input Reference (Pulse Train)	0 Hz to 100 kHz
Run Reverse	✓

Application Specific	
PID Controller	PI Control
PID Feedforward	✓
PID Threshold Detector	✓
PID Slew Rate	✓
Reference Configuration	✓
Run/Stop Configuration	✓
Input Scaling	4-point
Run Permit (Latching Run)	✓
Limit Switches	✓
Control	
Control Mode: Linear V to F	✓ (Definable Boost)
Control Mode: Square V to F	✓ (Definable Boost)
Control Mode: Resistance Compensation	✓
Low Energy Mode (Dynamic V to F)	✓
Motor Stability Optimiser	✓
Slip Compensation	✓
Auto-Tune: Static	✓
Switching Frequency	4 or 12 kHz
Catch An Already Spinning Motor	✓
Stop Mode: Ramp	✓
Stop Mode: Coast	✓
Stop Mode: Distance Stop	✓ when selected it stops in the same distance from any speed based on the programmed deceleration rate
Dc Injection Braking	✓
Supply Loss Detection	✓
Programmable Output Current Limit	✓
General	
Diagnostics	✓
Error History Log	4
Parameters Saved On Error	3 (Selectable)
Auto-Reset After Trip	✓
Power Loss Ride Through	✓
Security	4-digit PIN protection
Cooling Fan	Fixed Speed (No fan on S100-01x13 or S100-01x23 drives)

DIMENSIONS

How to select a drive

Electrical Considerations

- What is the supply voltage?
- Single or three phase input power?
- What is the motor rating?
- Continuous current – FLA (Full Load Amps)

Frame 01 Frame 02 Frame 03



Dimensions

Model Number	Overall Dimensions (±0.5 mm)				Mounting Dimensions (±0.5 mm)					
	Height	Width	Depth	Weight	DIN*	M1	M2	M3	M4	Φ
S100-01	156 mm 6.14 in	68 mm 2.70 in	130 mm 5.12 in	0.7 kg 1.54 lb	46 mm 1.81 in	145 mm 5.71 in	45 mm 1.77 in	22.5 mm 0.89 in	22.5 mm 0.89 in	4.8 mm 0.19 in
S100-02	192 mm 7.56 in	68 mm 2.70 in	132 mm 5.20 in	0.8 kg 1.76 lb	46 mm 1.81 in	180 mm 7.11 in	45 mm 1.77 in	22.5 mm 0.89 in	22.5 mm 0.89 in	4.8 mm 0.19 in
S100-03	192 mm 7.56 in	90 mm 3.54 in	132 mm 5.20 in	1.0 kg 2.2 lb	46 mm 1.81 in	180 mm 7.11 in	65 mm 2.56 in	37.5 mm 1.48 in	27.5 mm 1.08 in	4.8 mm 0.19 in

* No screws are required when mounting the drive onto a DIN rail.



Drive Clearances

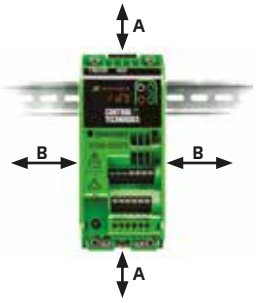

Drive Clearances	S100-01x13, S100-01x23	All other drives
A	100 mm (3.94 in)	45 mm (1.77 in)
B	0 mm (0 in)	

Mounting Dimensions

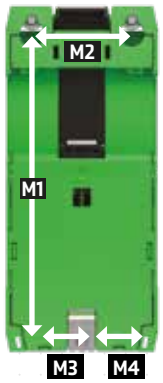

Documentation & Downloads

Product documentation and PC tools available for download from:
www.controltechniques.com/support

CONNECTIONS

Single Phase

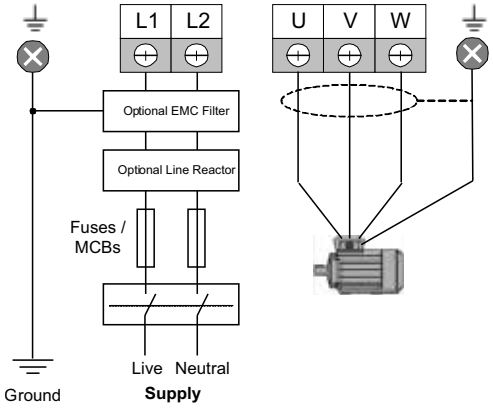

Three Phase

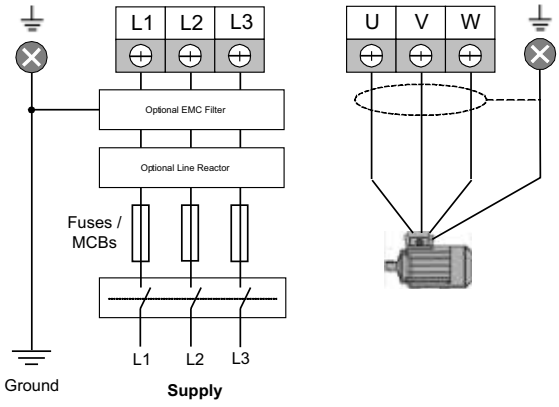

Control Connections (Default Settings)

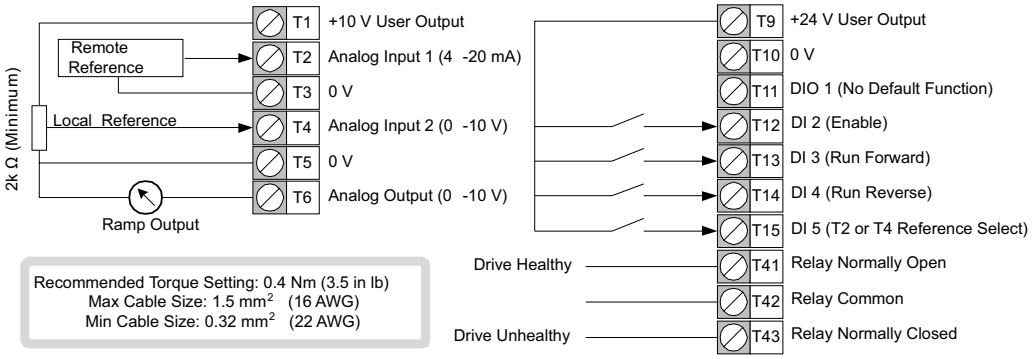

Recommended Torque Setting: 0.4 Nm (3.5 in lb)
Max Cable Size: 1.5 mm^2 (16 AWG)
Min Cable Size: 0.32 mm^2 (22 AWG)

PRODUCT CODES

S100- 01 4 2 3 - 0 A 0000

Series:

Frame Size
01 – Frame 1
02 – Frame 2
03 – Frame 3

Voltage Rating & Input Phase
1 – 100V, 1Φ
2 – 200V, 3Φ
S – 200V, 1Φ
D – 200V, 1/3Φ
4 – 400V, 3Φ

Frame Size, Power Step

Built-in EMC Filter
1 - C1 Internal Filter
3 - C3 Internal Filter

Generation Reference
0 – 2022 Release

Regional Defaults
A – EMEA & APAC
B – America
C – LS
K – Customer Specific

Reserved

MODEL NUMBER AND RATINGS

Variants with C3 built-in EMC filter

Product Code	Input Phases	Frame Size	Internal EMC Filter Performance	Heavy Duty		
				Max Cont. Current (A)	Motor Shaft Power (kW)	Motor Shaft Power (hp)
100/120 Vac +/-10%						
S100-01113-0A0000	1	01	C3	1.2	0.18	0.25
S100-01123-0A0000	1	01	C3	1.4	0.25	0.33
S100-01133-0A0000	1	01	C3	2.2	0.37	0.5
S100-03113-0A0000	1	03	C3	3.2	0.55	0.75
S100-03123-0A0000	1	03	C3	4.2	0.75	1
S100-03133-0A0000	1	03	C3	6	1.1	1.5
200/240 Vac +/-10%						
S100-01S13-0A0000	1	01	C3	1.4	0.18	0.25
S100-01213-0A0000	3	01	C3	1.4	0.18	0.25
S100-01S23-0A0000	1	01	C3	1.6	0.25	0.33
S100-01223-0A0000	3	01	C3	1.6	0.25	0.33
S100-01S33-0A0000	1	01	C3	2.4	0.37	0.50
S100-01233-0A0000	3	01	C3	2.4	0.37	0.50
S100-01S43-0A0000	1	01	C3	3.5	0.55	0.75
S100-01243-0A0000	3	01	C3	3.5	0.55	0.75
S100-01S53-0A0000	1	01	C3	4.6	0.75	1
S100-01253-0A0000	3	01	C3	4.6	0.75	1
S100-01D63-0A0000	1 | 3	01	C3	6.6	1.1	1.5
S100-01D73-0A0000	1 | 3	01	C3	7.5	1.5	2
S100-03D13-0A0000	1 | 3	03	C3	10.6	2.2	3
380/480 Vac +/-10%						
S100-02413-0A0000	3	02	C3	1.2	0.37	0.5
S100-02423-0A0000	3	02	C3	1.7	0.55	0.75
S100-02433-0A0000	3	02	C3	2.2	0.75	1
S100-02443-0A0000	3	02	C3	3.2	1.1	1.5
S100-02453-0A0000	3	02	C3	3.7	1.5	2
S100-02463-0A0000	3	02	C3	5.3	2.2	3
S100-03413-0A0000	3	03	C3	7.2	3	3
S100-03423-0A0000	3	03	C3	8.8	4	5

Note: The listed ordering codes are for 50 Hz default setting. For 60 Hz default setting change the ending digits from 0A0000 to 0B0000.

Variants with C1 built-in EMC filter

Product Code	Input Phases	Frame Size	Internal EMC Filter Performance	Heavy Duty		
				Max Cont. Current (A)	Motor Shaft Power (kW)	Motor Shaft Power (HP)
200/240 Vac +/-10%						
S100-02S11-0A0000	1	02	C1	1.2	0.18	0.25
S100-02S21-0A0000	1	02	C1	1.4	0.25	0.33
S100-02S31-0A0000	1	02	C1	2.2	0.37	0.5
S100-02S41-0A0000	1	02	C1	3.2	0.55	0.75
S100-02S51-0A0000	1	02	C1	4.2	0.75	1
S100-02S61-0A0000	1	02	C1	6	1.1	1.5
S100-02S71-0A0000	1	02	C1	6.8	1.5	2

Note: The listed ordering codes are for 50 Hz default setting. For 60 Hz default setting change the ending digits from 0A0000 to 0B0000.

© 2021 Nidec Control Techniques Limited. The information contained in this brochure is for guidance only and does not form part of any contract. The accuracy cannot be guaranteed as Nidec Control Techniques Ltd have an ongoing process of development and reserve the right to change the specification of their products without notice.

Nidec Control Techniques Limited. Registered Office: The Gro, Newtown, Powys SY16 3BE. Registered in England and Wales. Company Reg. No. 01236886

Part No. 0781-0750-01 10/21