EMERSON
Industrial Automation



User Guide

Affinity

Model sizes 1 to 6

Building Automation HVAC drive

Part Number: 0474-0000-02
Issue: 2

CONTROL TECHNIQUES

www.controltechniques.com

General Information

The manufacturer accepts no liability for any consequences resulting from inappropriate, negligent or incorrect installation or adjustment of the optional operating parameters of the equipment or from mismatching the variable speed drive with the motor.

The contents of this guide are believed to be correct at the time of printing. In the interests of a commitment to a policy of continuous development and improvement, the manufacturer reserves the right to change the specification of the product or its performance, or the contents of the guide, without notice.

All rights reserved. No parts of this guide may be reproduced or transmitted in any form or by any means, electrical or mechanical including photocopying, recording or by an information storage or retrieval system, without permission in writing from the publisher.

Drive and Building Automation interface software version

This product is supplied with the latest version of software. If this product is to be used in a new or existing system with other drives, there may be some differences between their software and the software in this product. These differences may cause this product to function differently. This may also apply to drives returned from a Control Techniques Service Centre.

The software version of the drive can be checked by looking at Pr **11.29** (or Pr **0.50**) and Pr **11.34**. The software version takes the form of zz.yy.xx, where Pr **11.29** displays zz.yy and Pr **11.34** displays xx, i.e. for software version 01.01.00, Pr **11.29** would display 1.01 and Pr **11.34** would display 0.

The software version of the Building Automation interface can be checked by looking at Pr **17.02** and Pr **17.51**. The software version takes the form of zz.yy.xx, where Pr **17.02** displays zz.yy and Pr **17.51** displays xx.

If there is any doubt, contact a Control Techniques Drive Centre.

Environmental statement

Control Techniques is committed to minimising the environmental impacts of its manufacturing operations and of its products throughout their life cycle. To this end, we operate an Environmental Management System (EMS) which is certified to the International Standard ISO 14001. Further information on the EMS, our Environmental Policy and other relevant information is available on request, or can be found at www.greendrives.com.

The electronic variable-speed drives manufactured by Control Techniques have the potential to save energy and (through increased machine/process efficiency) reduce raw material consumption and scrap throughout their long working lifetime. In typical applications, these positive environmental effects far outweigh the negative impacts of product manufacture and end-of-life disposal.

Nevertheless, when the products eventually reach the end of their useful life, they can very easily be dismantled into their major component parts for efficient recycling. Many parts snap together and can be separated without the use of tools, while other parts are secured with conventional screws. Virtually all parts of the product are suitable for recycling.

Product packaging is of good quality and can be re-used. Large products are packed in wooden crates, while smaller products come in strong cardboard cartons which themselves have a high recycled fibre content. If not re-used, these containers can be recycled. Polythene, used on the protective film and bags for wrapping product, can be recycled in the same way. Control Techniques' packaging strategy favours easily-recyclable materials of low environmental impact, and regular reviews identify opportunities for improvement.

When preparing to recycle or dispose of any product or packaging, please observe local legislation and best practice.

Copyright © June 2007 Control Techniques Drives Limited

Issue Number: 2

Software:

How to use this guide

This user guide provides complete information for installing and operating the drive from start to finish.

The information is in logical order, taking the reader from receiving the drive through to fine tuning the performance.

NOTE

There are specific safety warnings throughout this guide, located in the relevant sections. In addition, Chapter 1 *Safety Information* contains general safety information. It is essential that the warnings are observed and the information considered when working with or designing a system using the drive.

This map of the user guide helps to find the right sections for the task you wish to complete, but for specific information, refer to *Contents* on page 4:

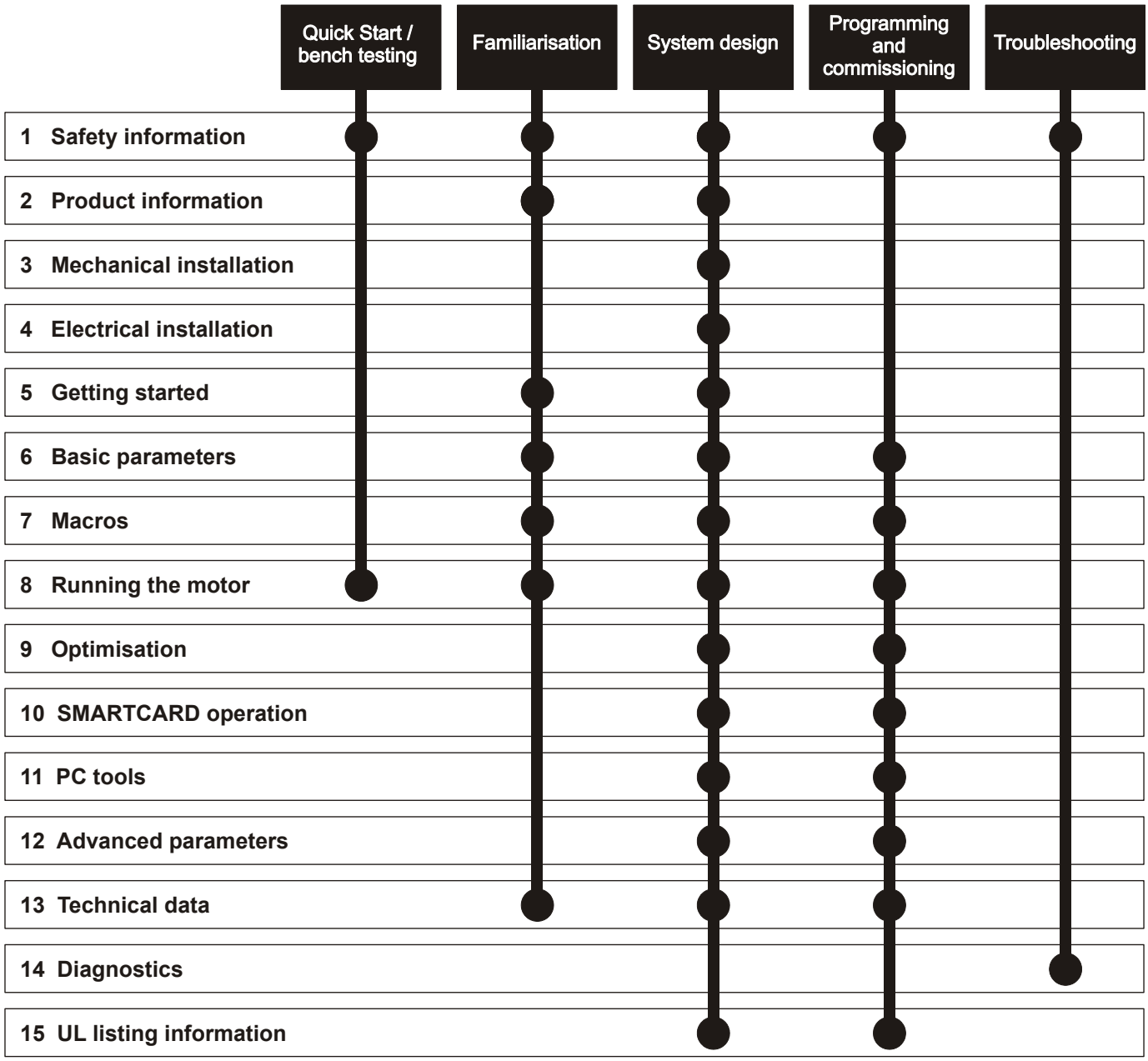

Contents

1 Safety Information 8
1.1 Warnings, Cautions and Notes 8
1.2 Electrical safety - general warning 8
1.3 System design and safety of personnel 8
1.4 Environmental limits 8
1.5 Compliance with regulations 8
1.6 Motor 8
1.7 Adjusting parameters 8

2 Product Information 9
2.1 Introduction 9
2.2 Drive types 10
2.3 Ratings 10
2.4 Model number 13
2.5 Operating modes 13
2.6 Drive features 14
2.7 Nameplate description 15
2.8 Options 16
2.9 Items supplied with the drive 18

3 Mechanical Installation 19
3.1 Safety information 19
3.2 Planning the installation 19
3.3 Terminal cover removal 19
3.4 Solutions Module / keypad installation / removal 24
3.5 Mounting methods 25
3.6 Enclosure for standard drives 38
3.7 Enclosure design and drive ambient temperature 39
3.8 Enclosing standard drive for high environmental protection 40
3.9 External EMC filter for standard drives 44
3.10 Electrical terminals 49
3.11 Routine maintenance 50

4 Electrical Installation 51
4.1 Power connections 51
4.2 AC supply requirements 54
4.3 Supplying the drive with DC / DC bus paralleling 55
4.4 Fan connections 55
4.5 Control 24Vdc supply 55
4.6 Ratings 56
4.7 Output circuit and motor protection 58
4.8 Braking 61
4.9 Ground leakage 63
4.10 EMC (Electromagnetic compatibility) 63
4.11 PC communications connections 71
4.12 Terminal connections 72
4.13 Building automation network connections 75
4.14 Heatsink fan supply connections (size 4 to 6) 75

5 Getting Started..... 77
5.1 Understanding the display 77
5.2 Keypad operation 77
5.3 Menu structure 78
5.4 Menu 0 79
5.5 Advanced menus 79
5.6 Changing the operating mode 81
5.7 Changing the keypad mode 81
5.8 Saving parameters 81
5.9 Restoring parameter defaults 81
5.10 Parameter access level and security 81
5.11 Displaying parameters with non-default values only 82
5.12 Displaying destination parameters only 82
5.13 Communications 82

6 Basic parameters 85
6.1 Single line descriptions 85
6.2 Full descriptions 90

7 Macros 99
7.1 Introduction 99
7.2 How to load a macro 100
7.3 Macro 1 - User Defined 101
7.4 Macro 2 - I/O Set-up 102
7.5 Macro 3 - Monitor 104
7.6 Macro 4 - Pump and Fan Control 106
7.7 Macro 5 - Pressure Control 108
7.8 Macro 6 - Compressor 110

8 Running the motor 112
8.1 Quick start Connections 112
8.2 Changing the operating mode 112
8.3 Changing keypad mode 112
8.4 Quick Start commissioning 116

9 Optimisation 118
9.1 Motor map parameters 118
9.2 Current limits 122
9.3 Motor thermal protection 123
9.4 Switching frequency 123
9.5 High speed operation 124

10 SMARTCARD operation 125
10.1 Introduction 125
10.2 Transferring data 126
10.3 Data block header information 127
10.4 SMARTCARD parameters 127
10.5 SMARTCARD trips 129

11 PC tools 131
11.1 AffinitySoft 131
11.2 Onboard PLC and SYPTLite 131
11.3 CT Energy Savings Estimator 133

12 Advanced parameters 134
12.1 Menu 1: Frequency / speed reference 142
12.2 Menu 2: Ramps 146
12.3 Menu 3: Frequency slaving, speed feedback and speed control 149
12.4 Menu 4: Torque and current control 152
12.5 Menu 5: Motor control 155
12.6 Menu 6: Sequencer and clock 159
12.7 Menu 7: Analog I/O 161
12.8 Menu 8: Digital I/O 164
12.9 Menu 9: Programmable logic, motorized pot, binary sum and timers 167
12.10 Menu 10: Status and trips 171
12.11 Menu 11: General drive set-up 173
12.12 Menu 12: Threshold detectors, variable selectors and brake control function 174
12.13 Menu 14: User PID controller 180
12.14 Menus 15 and 16: Solutions Module set-up 185
12.15 Menu 17: Building Automation Network 204
12.16 Menu 18: Application menu 1 204
12.17 Menu 19: Application menu 2 204
12.18 Menu 20: Application menu 3 204
12.19 Menu 21: Second motor parameters 205
12.20 Menu 22: Additional Menu 0 set-up 206
12.21 Advanced features 207

13 Technical Data 219
13.1 Drive technical data 219
13.2 Optional external EMC filters 232

14 Diagnostics 235
14.1 Trip indications 235
14.2 Alarm indications 246
14.3 Status indications 247
14.4 Displaying the trip history 247
14.5 Behaviour of the drive when tripped 248

15 UL Listing Information 249
15.1 Common UL information 249
15.2 Power dependant UL information 249
15.3 AC supply specification 249
15.4 Maximum continuous output current 249
15.5 Safety label 250
15.6 UL listed accessories 250

List of figures 251

List of tables 253

Index 255

Declaration of Conformity (Size 1 to 5)

Control Techniques Ltd
The Gro
Newtown
Powys
UK
SY16 3BE

BA1201	BA1202	BA1203	BA1204		
BA2201	BA2202	BA2203			
BA3201	BA3202				
BA4201	BA4202	BA4203			

BA1401	BA1402	BA1403	BA1404	BA1405	BA1406
BA2401	BA2402	BA2403			
BA3401	BA3402	BA3403			
BA4401	BA4402	BA4403			
BA5401	BA5402				

BA3501	BA3502	BA3503	BA3504	BA3505	BA3506
BA3507					

BA4601	BA4602	BA4603	BA4604	BA4605	BA4606
BA5601	BA5602				

The AC variable speed drive products listed above have been designed and manufactured in accordance with the following European harmonised standards:

EN 61800-5-1	Adjustable speed electrical power drive systems - safety requirements - electrical, thermal and energy
EN 61800-3	Adjustable speed electrical power drive systems. EMC product standard including specific test methods
EN 61000-6-2	Electromagnetic compatibility (EMC). Generic standards. Immunity standard for industrial environments
EN 61000-6-4	Electromagnetic compatibility (EMC). Generic standards. Emission standard for industrial environments

These products comply with the Low Voltage Directive 2006/95/EC, the Electromagnetic Compatibility (EMC) Directive 89/336/EEC and the CE Marking Directive 93/68/EEC.

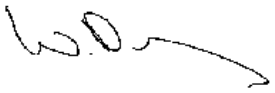

Executive Vice President, Technology
Newtown

Date: 3rd May 2007

These electronic drive products are intended to be used with appropriate motors, controllers, electrical protection components and other equipment to form complete end products or systems. Compliance with safety and EMC regulations depends upon installing and configuring drives correctly, including using the specified input filters. The drives must be installed only by professional assemblers who are familiar with requirements for safety and EMC. The assembler is responsible for ensuring that the end product or system complies with all the relevant laws in the country where it is to be used. Refer to the User Guide. An EMC Data Sheet is also available giving detailed EMC information.

Declaration of Conformity (Size 6)

Control Techniques Ltd
The Gro
Newtown
Powys
UK
SY16 3BE

BA6401 BA6402

BA6601 BA6602

The AC variable speed drive products listed above have been designed and manufactured in accordance with the following European harmonised standards:

EN 61800-5-1	Adjustable speed electrical power drive systems - safety requirements - electrical, thermal and energy
EN 61800-3	Adjustable speed electrical power drive systems. EMC product standard including specific test methods
EN 61000-6-2	Electromagnetic compatibility (EMC). Generic standards. Immunity standard for industrial environments

These products comply with the Low Voltage Directive 2006/95/EC, the Electromagnetic Compatibility (EMC) Directive 89/336/EEC and the CE Marking Directive 93/68/EEC.



Executive Vice President, Technology

Newtown

Date: 3rd May 2007

These electronic drive products are intended to be used with appropriate motors, controllers, electrical protection components and other equipment to form complete end products or systems. Compliance with safety and EMC regulations depends upon installing and configuring drives correctly, including using the specified input filters. The drives must be installed only by professional assemblers who are familiar with requirements for safety and EMC. The assembler is responsible for ensuring that the end product or system complies with all the relevant laws in the country where it is to be used. Refer to the User Guide. An EMC Data Sheet is also available giving detailed EMC information.

1 Safety Information

1.1 Warnings, Cautions and Notes



WARNING

A Warning contains information which is essential for avoiding a safety hazard.



CAUTION

A Caution contains information which is necessary for avoiding a risk of damage to the product or other equipment.

NOTE

A Note contains information which helps to ensure correct operation of the product.

1.2 Electrical safety - general warning

The voltages used in the drive can cause severe electrical shock and/or burns, and could be lethal. Extreme care is necessary at all times when working with or adjacent to the drive.

Specific warnings are given at the relevant places in this User Guide.

1.3 System design and safety of personnel

The drive is intended as a component for professional incorporation into complete equipment or a system. If installed incorrectly, the drive may present a safety hazard.

The drive uses high voltages and currents, carries a high level of stored electrical energy, and is used to control equipment which can cause injury.

Close attention is required to the electrical installation and the system design to avoid hazards either in normal operation or in the event of equipment malfunction. System design, installation, commissioning/ start-up and maintenance must be carried out by personnel who have the necessary training and experience. They must read this safety information and this User Guide carefully.

The STOP function of the drive do not isolate dangerous voltages from the output of the drive or from any external option unit. The supply must be disconnected by an approved electrical isolation device before gaining access to the electrical connections.

None of the drive functions must be used to ensure safety of personnel, i.e. they must not be used for safety-related functions.

Careful consideration must be given to the functions of the drive which might result in a hazard, either through their intended behaviour or through incorrect operation due to a fault. In any application where a malfunction of the drive or its control system could lead to or allow damage, loss or injury, a risk analysis must be carried out, and where necessary, further measures taken to reduce the risk - for example, an over-speed protection device in case of failure of the speed control, or a fail-safe mechanical brake in case of loss of motor braking.

1.4 Environmental limits

Instructions in this User Guide regarding transport, storage, installation and use of the drive must be complied with, including the specified environmental limits. Drives must not be subjected to excessive physical force.

1.5 Compliance with regulations

The installer is responsible for complying with all relevant regulations, such as national wiring regulations, accident prevention regulations and electromagnetic compatibility (EMC) regulations. Particular attention must be given to the cross-sectional areas of conductors, the selection of fuses or other protection, and protective earth (ground) connections.

This User Guide contains instruction for achieving compliance with specific EMC standards.

Within the European Union, all machinery in which this product is used must comply with the following directives:

98/37/EC: Safety of machinery.
89/336/EEC: Electromagnetic Compatibility.

1.6 Motor

Ensure the motor is installed in accordance with the manufacturer's recommendations. Ensure the motor shaft is not exposed.

Standard squirrel cage induction motors are designed for single speed operation. If it is intended to use the capability of the drive to run a motor at speeds above its designed maximum, it is strongly recommended that the manufacturer is consulted first.

Low speeds may cause the motor to overheat because the cooling fan becomes less effective. The motor should be installed with a protection thermistor. If necessary, an electric forced vent fan should be used.

The values of the motor parameters set in the drive affect the protection of the motor. The default values in the drive should not be relied upon.

It is essential that the correct value is entered in parameter **0.46** motor rated current. This affects the thermal protection of the motor.

1.7 Adjusting parameters

Some parameters have a profound effect on the operation of the drive. They must not be altered without careful consideration of the impact on the controlled system. Measures must be taken to prevent unwanted changes due to error or tampering.

2 Product Information

2.1 Introduction

The Affinity is a high performance open loop AC drive specifically designed for use in building automation HVAC applications. Figure 2-1 below indicates the key product features including built in connectivity to building automation systems. Each drive is equipped with two identical option slots for I/O and communications expansion

Figure 2-1 Features

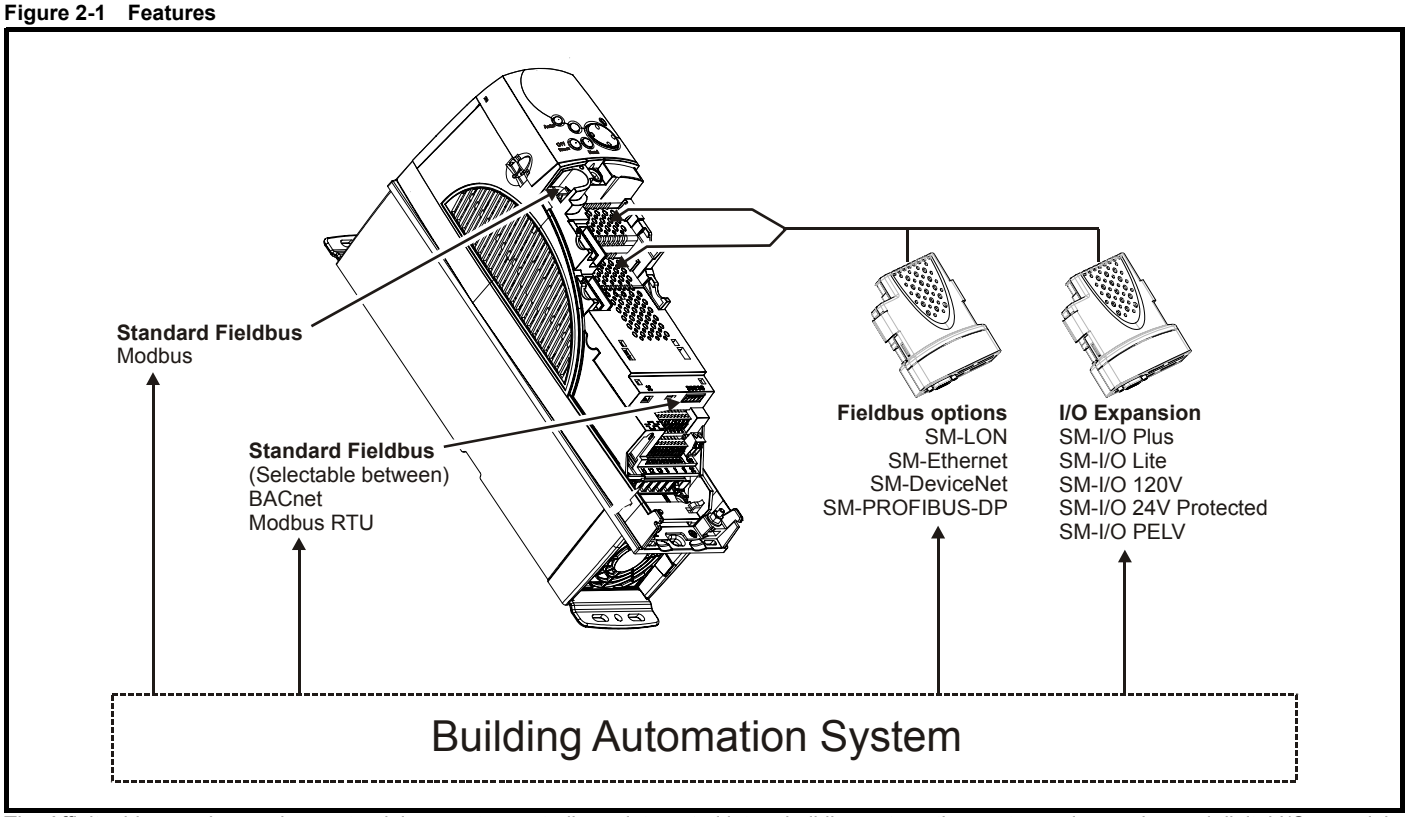

The Affinity drive can be used as a standalone motor controller or integrated into a building automation system using analog and digital I/O or serial communications. The base drive incorporates a RS-485 serial communications port that is selectable between BACnet, or Modbus RTU. LonWorks, Ethernet, Profibus and Devicenet connectivity is achieved with the addition of plug-in option modules.

Key features:

Fire Mode

Fire Mode is a configurable override function that is used to alter the operation of the drive based upon external inputs, typically a discrete digital input from a Building Management Fire Protection system (refer to section 12.21.3 *Fire mode* on page 208)

WARNING

Fire Mode - important warning.
When Fire Mode is active the motor overload and thermal protection are disabled, as well as a number of drive protection functions. Fire Mode is provided for use only in emergency situations where the safety risk from disabling protection is less than the risk from the drive tripping - typically in smoke extraction operation to permit evacuation of a building. The use of Fire Mode itself causes a risk of fire from overloading of the motor or drive, so it must only be used after careful consideration of the balance of risks.

Care must be taken to prevent inadvertent activation or de-activation of Fire Mode. Fire Mode is indicated by a flashing display text warning "Fire mode active".

Care must be taken to ensure that parameters Pr **1.53** or Pr **1.54** are not inadvertently re-allocated to different inputs or variables. It should be noted that, by default, Pr **1.54** is controlled from digital input 4 and changing Pr **6.04** or Pr **8.24** can re-allocate this digital input to another parameter. These parameters are at access level 2 in order to minimise the risk of inadvertent or unauthorised changes. It is recommended that User Security be applied to further reduce the risk (see section 5.10 *Parameter access level and security* on page 81). These parameters may also be changed via serial communications so adequate precautions should be taken if this functionality is utilised.

Real time Clock

An internal real time clock is available which is used for the timer functions and trip log

Timer functions

Two timers are available to switch an output on a routine basis

Sleep/Wake Mode

Sleep/wake mode stops and starts the motor during periods of low demand to improve system efficiency

Advanced Process PID

Two PIDs are available which can operate independently or combine to provide more complex functionality

2.2 Drive types

There are two types of Affinity drives available, namely standard and E12/E54. The E12/E54 drive is identified by a three character designation at the end of the model number, E12 (US) or E54 (EUR). The standard drive has no additional characters.

The standard drives are rated to IP20/NEMA1. Drive sizes 1 to 3 conform to UL Type 1 and sizes 4 to 6 are Open Class. If the optional conduit box (refer to section 3.5 *Mounting methods* on page 25) is installed, then drive sizes 4-6 conform to UL Type 1.

The E12/E54 drives have an additional cover installed. They are rated to IP54/NEMA12 and conform to UL Type 12. E12/E54 drive sizes 1 to 3 have an internal fan installed to re-circulate the air. The larger drive sizes have fans installed to the cover to provide forced ventilation using filtered air.

2.3 Ratings

Self ventilated (TENV/TEFC) induction motors require increased protection against overload due to the reduced cooling effect of the fan at low speed. To provide the correct level of protection the I^2t software operates at a level which is speed dependent. This is illustrated in the graph below.

NOTE

The speed at which the low speed protection takes effect can be changed by the setting of Pr **4.25**. The protection starts when the motor speed is below 15% of base speed when Pr **4.25** = 0 and below 50% when Pr **4.25** = 1 (default).

Operation of motor I^2t protection (It.AC trip)

Motor I^2t protection is fixed as shown below and is compatible with:

- Self ventilated (TENV/TEFC) induction motors

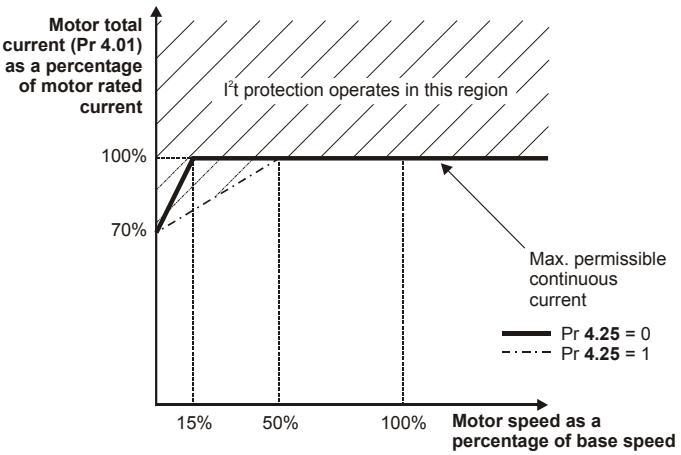

The continuous current ratings given are for maximum 40°C (104°F), 1000m altitude and 3.0 kHz switching. Derating is required for higher switching frequencies, ambient temperature >40°C (104°F) and high altitude. For further information, refer to section 13.1.1 *Power and current ratings (Derating for switching frequency and temperature)* on page 219.

Table 2-1 200V Drive ratings including types E12/E54 (200V to 240V ±10%)

Model		Maximum continuous output current	Nominal power at 220V	Motor power at 230V	Peak current
		A	kW	hp	A
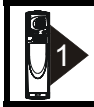	1201	5.2	1.1	1.5	5.7
	1202	6.8	1.5	2.0	7.4
	1203	9.6	2.2	3.0	10.5
	1204	11	3.0	3.0	12.1
	2201	15.5	4.0	5.0	17.0
	2202	22	5.5	7.5	24.2
	2203	28	7.5	10	30.8
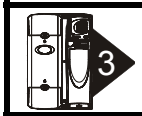	3201	42	11	15	46
	3202	54	15	20	59
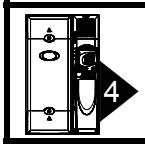	4201	68	18.5	25	74
	4202	80	22	30	88
	4203	104	30	40	114

Table 2-2 400V Drive ratings including types E12/E54 (380V to 480V ±10%)

Model		Maximum continuous output current	Nominal power at 400V	Motor power at 460V	Peak current
		A	kW	hp	A
	1401	2.8	1.1	1.5	3.0
	1402	3.8	1.5	2.0	4.1
	1403	5.0	2.2	3.0	5.5
	1404	6.9	3.0	5.0	7.5
	1405	8.8	4.0	5.0	9.6
	1406	11	5.5	7.5	12.1
	2401	15.3	7.5	10	16.8
	2402	21	11	15	23
	2403	29	15	20	31
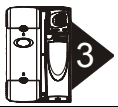	3401	35	18.5	25	38
	3402	43	22	30	47
	3403	56	30	40	61
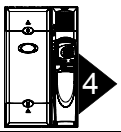	4401	68	37	50	74
	4402	83	45	60	91
	4403	104	55	75	114
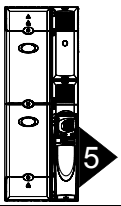	5401	138	75	100	151
	5402	168	90	125	184
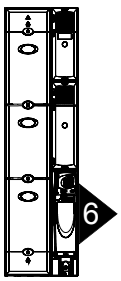	6401	205	110	150	225
	6402	236	132	200	259

Table 2-3 575V Drive ratings including types E12/E54 (500V to 575V ±10%)

Model		Maximum continuous output current	Nominal power at 575V	Motor power at 575V	Peak current
		A	kW	hp	A
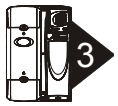	3501	5.4	3.0	3.0	5.9
	3502	6.1	4.0	5.0	6.7
	3503	8.4	5.5	7.5	9.2
	3504	11	7.5	10	12.1
	3505	16	11	15	17.6
	3506	22	15	20	24.2
	3507	27	18.5	25	29.7
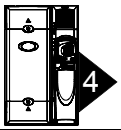	4603	36	22	30	39.6
	4604	43	30	40	47.3
	4605	52	37	50	57.2
	4606	62	45	60	68
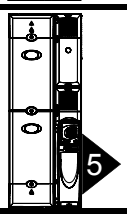	5601	84	55	75	92
	5602	99	75	100	108
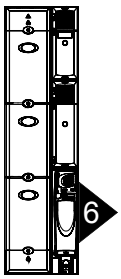	6601	125	90	125	137
	6602	144	110	150	158

The power ratings above for model size 4 and larger are for the 690V drives when used on a 500V to 575V supply.

Table 2-4 690V Drive ratings including types E12/E54 (500V to 690V ±10%)

Model		Maximum continuous output current	Nominal power at 690V	Motor power at 690V	Peak current
		A	kW	hp	A
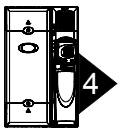	4601	22	18.5	25	24.2
	4602	27	22	30	29.7
	4603	36	30	40	39.6
	4604	43	37	50	47.3
	4605	52	45	60	57.2
	4606	62	55	75	68.2
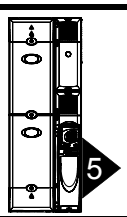	5601	84	75	100	92
	5602	99	90	125	108
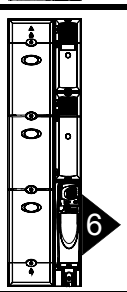	6601	125	110	150	137
	6602	144	132	175	158

2.3.1 Typical short term overload limits

The maximum percentage overload limit changes depending on the selected motor. Variations in motor rated current, motor power factor and motor leakage inductance all result in changes in the maximum possible overload. The exact value for a specific motor can be calculated using the equations detailed in Menu 4 in the *Advanced User Guide*.

Typical values are shown in the table below for RFC mode (RFC)and open loop (OL) modes:

Table 2-5 Typical overload limits for size 1 to 5

Operating mode	RFC mode from cold	RFC mode from 100%	Open loop from cold	Open loop from 100%
Overload with motor rated current = drive rated current	110% for 215s	110% for 5s	110% for 215s	110% for 5s

Table 2-6 Typical overload limits for size 6

Operating mode	RFC mode from cold	RFC mode from 100%	Open loop from cold	Open loop from 100%
Overload with motor rated current = drive rated current	110% for 165s	110% for 9s	110% for 165s	110% for 9s

Generally the drive rated current is higher than the matching motor rated current allowing a higher level of overload than the default setting as illustrated by the example of a typical 4 pole motor.

The time allowed in the overload region is proportionally reduced at very low output frequency.

NOTE

The maximum overload level which can be attained is independent of the speed.

2.4 Model number

The way in which the model numbers for the Affinity range are formed is illustrated below.

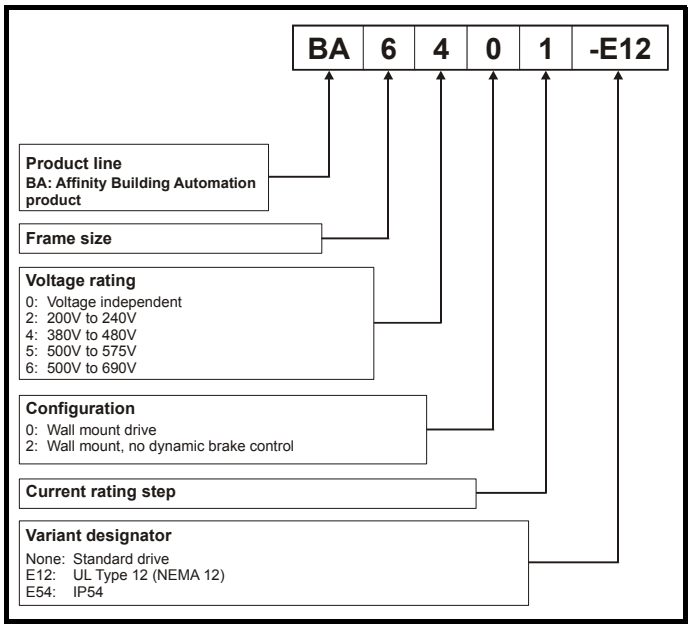

2.5 Operating modes

The Affinity is designed to operate in any of the following modes:

1. Open loop mode
   - Open loop vector mode
   - Fixed V/F mode (V/Hz)
   - Quadratic V/F mode (V/Hz)
2. RFC mode

2.5.1 Open loop mode

The drive applies power to the motor at frequencies varied by the user. The motor speed is a result of the output frequency of the drive and slip due to the mechanical load. The drive can improve the speed control of the motor by applying slip compensation. The performance at low speed depends on whether V/F mode or open loop vector mode is selected.

For further details refer to section 9.1.1 *Open loop motor control* on page 118.

Open loop vector mode

The voltage applied to the motor is directly proportional to the frequency except at low speed where the drive uses motor parameters to apply the correct voltage to keep the flux constant under varying load conditions.

Typically 100% torque is available down to 1Hz for a 50Hz motor.

Fixed V/F mode

The voltage applied to the motor is directly proportional to the frequency except at low speed where a voltage boost is provided which is set by the user. This mode can be used for multi-motor applications.

Typically 100% torque is available down to 4Hz for a 50Hz motor.

Quadratic V/F mode

The voltage applied to the motor is directly proportional to the square of the frequency except at low speed where a voltage boost is provided which is set by the user. This mode can be used for running fan or pump applications with quadratic load characteristics or for multi-motor applications. This mode is not suitable for applications requiring a high starting torque.

2.5.2 RFC mode

Rotor flux control provides closed loop control without the need for position feedback by using current, voltages and key motor parameters to estimate the motor speed. It can eliminate instability traditionally associated with open loop control such as operating large motors with light loads at low frequencies.

For further details, refer to section 9.1.2 *RFC mode* on page 120.

2.6 Drive features

Figure 2-2 Features of the drive

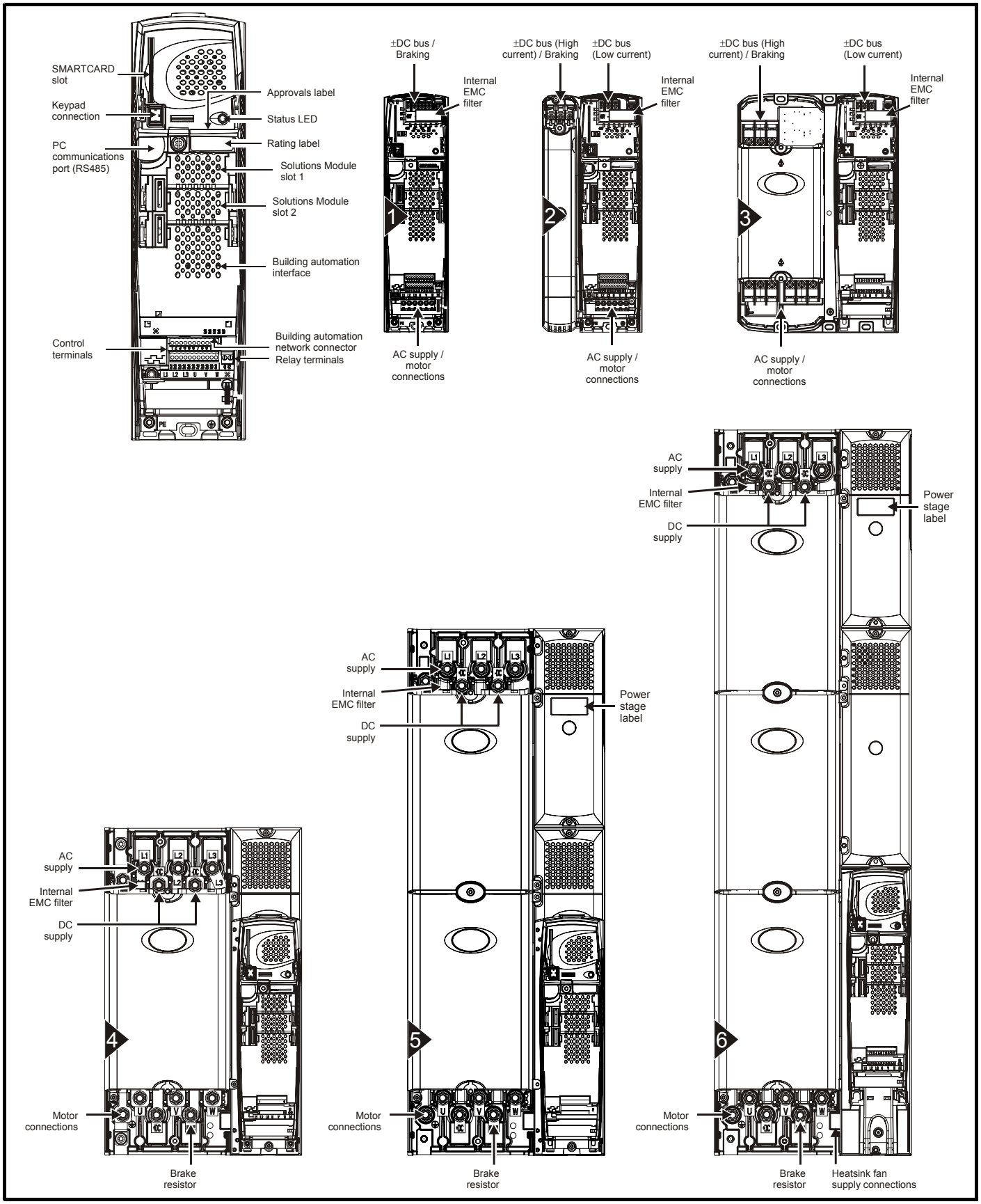

NOTE

The size 6 drive requires a 24V fan supply.

2.7 Nameplate description

See Figure 2-2 for location of rating labels.

Figure 2-3 Typical drive rating label

Standard rating label (size 1 to 6)

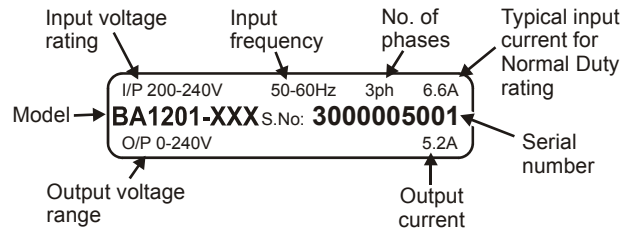

Standard approvals label (Size 1 to 6)

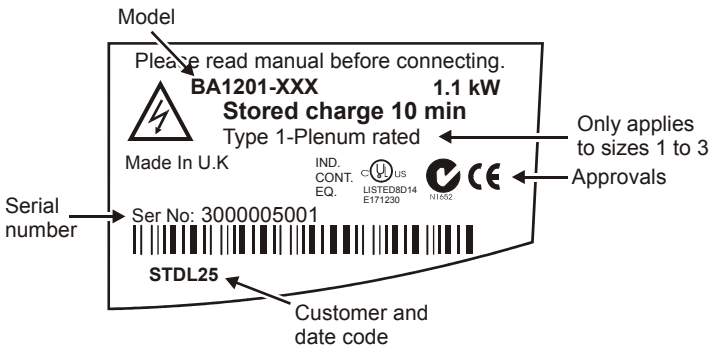

Key to approvals

CE	CE approval	Europe
N1652	C Tick approval	Australia
cULus	UL / cUL approval	USA & Canada

Standard power stage label (Size 5 and 6 only)

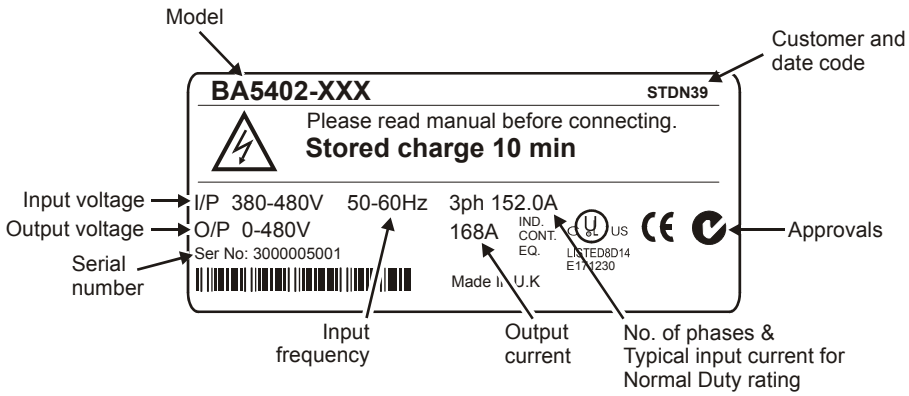

E12/E54 rating label

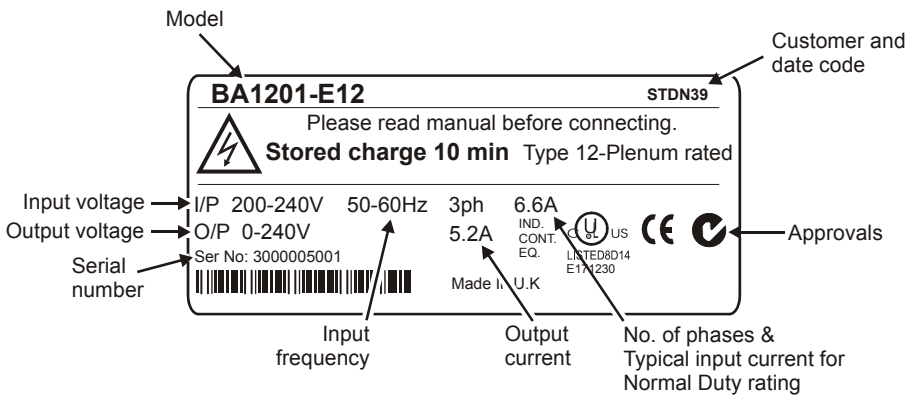

2.8 Options

Figure 2-4 Options available with Affinity

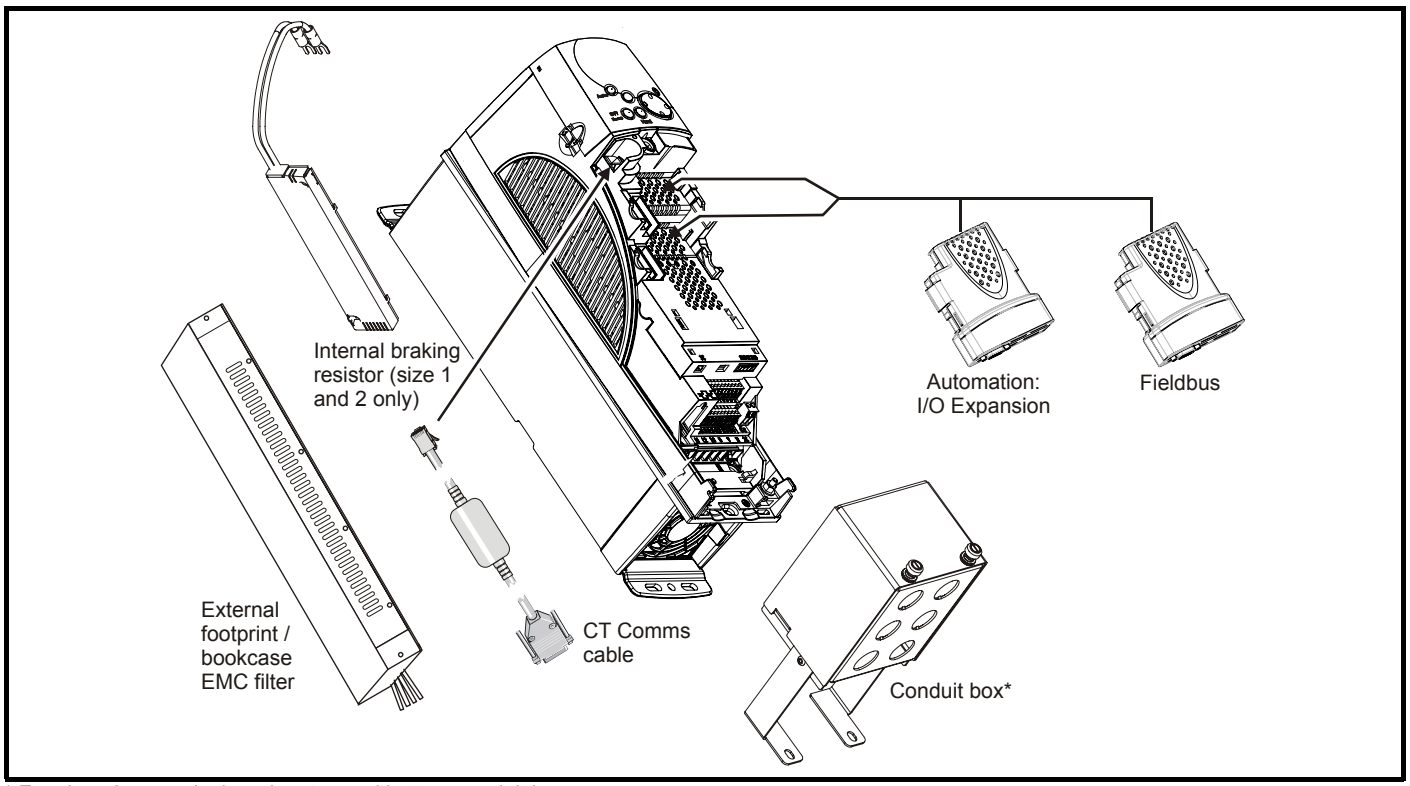

* For sizes 3 upwards there is a top and bottom conduit box.

All Solutions Modules are colour-coded in order to make identification easy. The following table shows the colour-code key and gives further details on their function.

Table 2-7 Solutions Module identification

Type	Solutions Module	Colour	Name	Further Details
Automation (I/O Expansion)		Yellow	SM-I/O Plus	**Extended I/O interface** Increases the I/O capability by adding the following to the existing I/O in the drive: • Digital inputs x 3 • Digital I/O x 3 • Analog inputs (voltage) x 2 • Analog output (voltage) x 1 • Relay x 2
		Dark Yellow	SM-I/O Lite	**Additional I/O** 1 x Analog input (± 10V bi-polar or current modes) 1 x Analog output (0-10V or current modes) 3 x Digital input and 1 x Relay
		Turquoise	SM-I/O PELV	**Isolated I/O to NAMUR NE37 specifications** For chemical industry applications 1 x Analog input (current modes) 2 x Analog outputs (current modes) 4 x Digital input / outputs, 1 x Digital input, 2 x Relay outputs
		Olive	SM-I/O 120V	**Additional I/O conforming to IEC 61131-2 120Vac** 6 digital inputs and 2 relay outputs rated for 120Vac operation
		Cobalt Blue	SM-I/O 24V Protected	**Additional I/O with overvoltage protection up to 48V** 2 x Analog outputs (current modes) 4 x Digital input / outputs, 3 x Digital inputs, 2 x Relay outputs
Fieldbus		Purple	SM-PROFIBUS-DP	**Profibus option** PROFIBUS DP adapter for communications with the drive
		Medium Grey	SM-DeviceNet	**DeviceNet option** Devicenet adapter for communications with the drive
		Beige	SM-Ethernet	**Ethernet option** 10 base-T / 100 base-T; Supports web pages, SMTP mail and multiple protocols: DHCP IP addressing; Standard RJ45 connection
		Pale Green	SM-LON	**LonWorks option** LonWorks adapter for communications with the drive

2.9 Items supplied with the drive

The drive is supplied with a BA Keypad a printed manual, a SMARTCARD, a safety information booklet, the Certificate of Quality, an accessory kit box including the items shown in Table 2-8, and a CD ROM containing all related product documentation and software tools.

Table 2-8 Parts supplied with the drive

Description	Size 1	Size 2	Size 3	Size 4	Size 5	Size 6
Control connectors	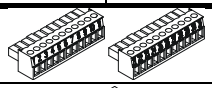					
Relay connector						
Grounding bracket	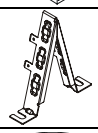					
Through panel mounting gasket	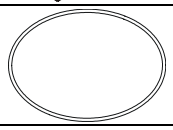					
HVAC communication connector						
Through panel mounting bracket	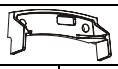					
Surface mounting brackets	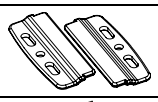	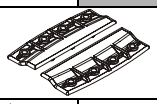		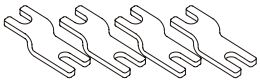		
E12/E54 surface mounting brackets	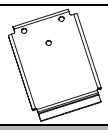	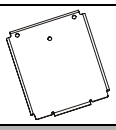	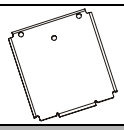			
Top surface mounting brackets					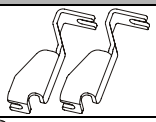	
Nylon washers	 M6	 M6	 M6		 M8 M6	
Sealing clips				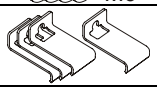		
Fixing screws				 M8x20		
Grounding clamp	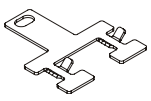		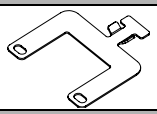			
Ground cable bridge		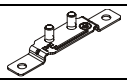				
DC terminal cover grommets	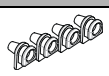					
Ferrite ring						
Supply and motor connector						
Fan supply connector						
IP54 gasket						
IP54 insert						
BA Keypad				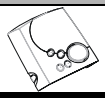		

3 Mechanical Installation

This chapter describes how to use all mechanical details to install the drive.

The standard drive is rated as IP20/UL Type 1 for size 1 to 3 and IP20/ open class for size 4 to 6. If the optional conduit box is installed, then size 4 to 6 are rated as UL Type 1. (The conduit box is an additional accessory for all sizes of the standard drive and is required for conduit connection to the drive)

The standard drive is intended to be installed as appropriate for the country where the equipment is used e.g. inside an additional enclosure, plenum or on a plant room wall.

The E12/E54 has additional covers installed and is IP54/UL Type 12 rated. It is intended to be installed on a plant room wall and requires no additional enclosure.

The UL Type 1 and UL Type 12 drives are also plenum rated and are therefore suitable for Plenum mounting applications.

Key features of this chapter include:

- Planning the installation
- Terminal cover removal
- Conduit and Gland connection
- Solutions Module installation
- Surface mounting standard drive
- Through-hole mounting standard drive
- E12/E54 mounting
- Through panel mounting standard drive in an IP54/UL Type 12 enclosure
- Enclosure sizing and layout
- Terminal location and torque settings

3.1 Safety information

WARNING

Follow the instructions
The mechanical and electrical installation instructions must be adhered to. Any questions or doubt should be referred to the supplier of the equipment. It is the responsibility of the owner or user to ensure that the installation of the drive and any external option unit, and the way in which they are operated and maintained, comply with the requirements of the Health and Safety at Work Act in the United Kingdom or applicable legislation and regulations and codes of practice in the country in which the equipment is used.

WARNING

Competence of the installer
The drive must be installed by professional assemblers who are familiar with the requirements for safety and EMC. The assembler is responsible for ensuring that the end product or system complies with all the relevant laws in the country where it is to be used.

WARNING

The weights of the size 3 (E12/E54 drive) and size 4, 5 and 6 standard drives are as follows:

Size 3 (E12/E54):	25 kg (55 lb)
Size 4:	30 kg (66 lb)
Size 5:	55 kg (121 lb)
Size 6:	75 kg (165 lb)

Use appropriate safeguards when lifting these models

3.2 Planning the installation

The following considerations must be made when planning the installation:

3.2.1 Access

Access must be restricted to authorised personnel only. Safety regulations which apply at the place of use must be complied with.

3.2.2 Environmental protection

The standard drive must be protected from:

- moisture, including dripping water or spraying water and condensation. An anti-condensation heater may be required, which must be switched off when the drive is running.
- contamination with electrically conductive material
- contamination with any form of dust which may restrict the fan, or impair airflow over various components
- temperature beyond the specified operating and storage ranges
- corrosive gasses

The E12/E54 variant is protected from airborne dust, splashing water and non-corrosive liquids.

3.2.3 Cooling

If mounting the drive in an enclosure the heat produced must be removed without its specified operating temperature being exceeded. Note that a sealed enclosure gives much reduced cooling compared with a ventilated one, and may need to be larger and/or use internal air circulating fans.

For further information, refer to section 3.6.2 *Enclosure sizing* on page 38.

The E12/E54 drive has an additional fan installed internally to assist cooling by circulating air between the outer cover and the drive.

3.2.4 Electrical safety

The installation must be safe under normal and fault conditions. Electrical installation instructions are given in Chapter 4 *Electrical Installation on page 51*.

3.2.5 Fire protection

The drive enclosure is not classified as a fire enclosure. A separate fire enclosure must be provided.

3.2.6 Electromagnetic compatibility

Variable speed drives are powerful electronic circuits which can cause electromagnetic interference if not installed correctly with careful attention to the layout of the wiring.

Some simple routine precautions can prevent disturbance to typical industrial control equipment.

If it is necessary to meet strict emission limits, or if it is known that electromagnetically sensitive equipment is located nearby, then full precautions must be observed. In-built into the drive, is an internal EMC filter, which reduces emissions under certain conditions. If these conditions are exceeded, then the use of an external EMC filter may be required at the drive inputs, which must be located very close to the drives. Space must be made available for the filters and allowance made for carefully segregated wiring. Both levels of precautions are covered in section 4.10 *EMC (Electromagnetic compatibility) on page 63*.

3.2.7 Hazardous areas

The drive must not be located in a classified hazardous area unless it is installed in an approved enclosure and the installation is certified.

3.3 Terminal cover removal

WARNING

Isolation device
The AC supply must be disconnected from the drive using an approved isolation device before any cover is removed from the drive or before any servicing work is performed.

WARNING

Stored charge

The drive contains capacitors that remain charged to a potentially lethal voltage after the AC supply has been disconnected. If the drive has been energized, the AC supply must be isolated at least ten minutes before work may continue.

Normally, the capacitors are discharged by an internal resistor. Under certain, unusual fault conditions, it is possible that the capacitors may fail to discharge, or be prevented from being discharged by a voltage applied to the output terminals. If the drive has failed in a manner that causes the display to go blank immediately, it is possible the capacitors will not be discharged. In this case, consult Control Techniques or their authorised distributor.

3.3.1 Removing the terminal covers

Standard drive

Size 1 is fitted with two terminal covers: Control and DC terminal covers.

Size 2 is fitted with three terminal covers: Control, High current DC / Braking and low voltage DC terminal covers.

Size 3 is fitted with four terminal covers: Control, High current DC / Braking, low voltage DC and AC terminal covers.

Size 4, 5 and 6 are fitted with three terminal covers: Control, input and output terminal covers.

In order to provide access to the mounting holes when a size 1, 2 or 3 drive is through-panel mounted, the control terminal cover must be removed. For size 3 the high current DC / Braking and AC terminal covers must also be removed. Once the drive has been mounted, the terminal covers can be replaced.

E12/E54

Size 1 to 3 are only fitted with 1 outer cover which is held on by 6 sealing screws. By removing this cover access can be gained to all power and control terminals as per the standard drive. No further covers require removal.

Figure 3-1 Location and identification of standard drive terminal covers

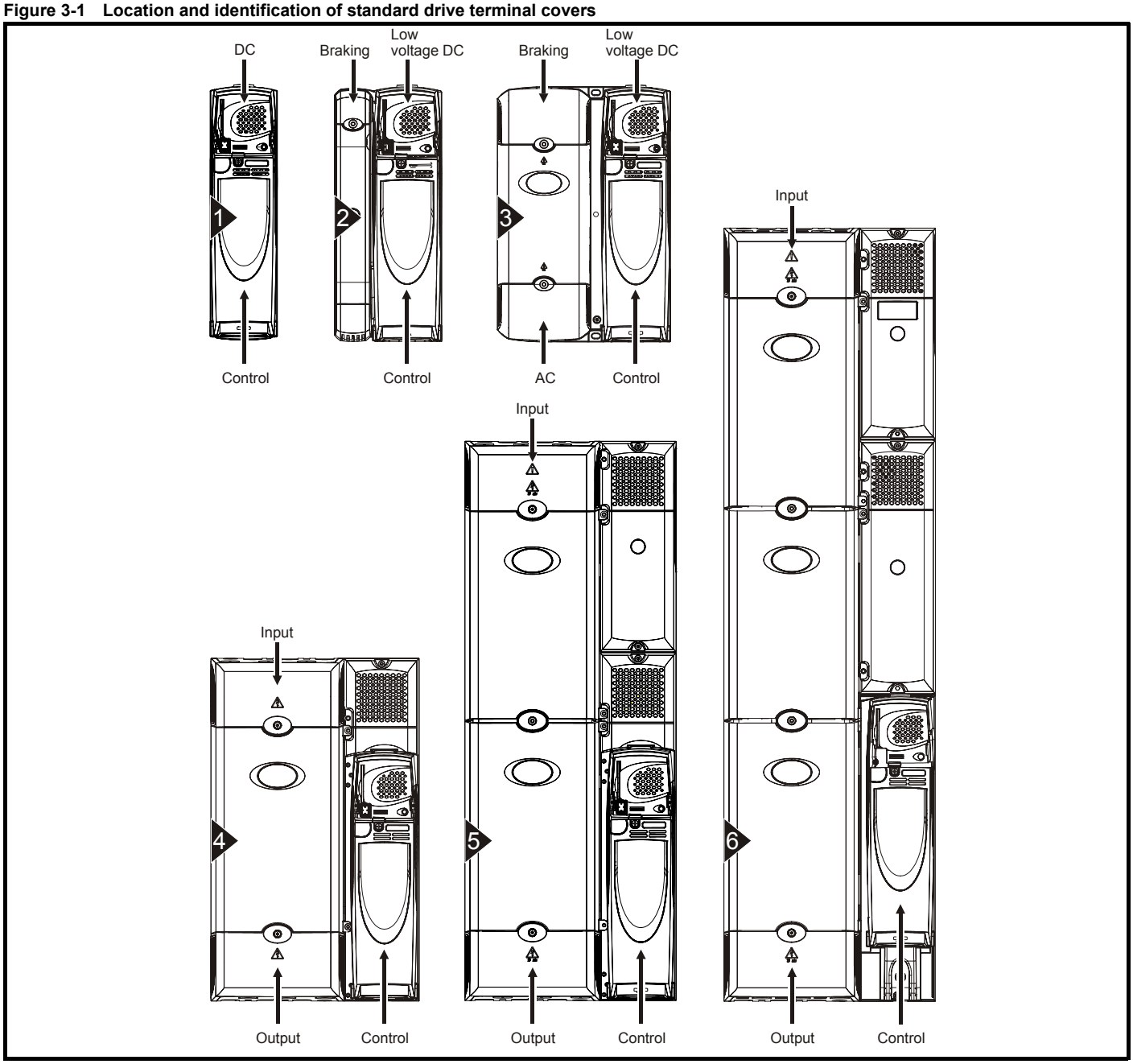

To remove a terminal cover, undo the screw and lift the terminal cover off as shown. The control terminal cover must be removed first before the DC (size 1) / low voltage DC (sizes 2 and 3) terminal cover can be removed.

When replacing the terminal covers the screws should be tightened with a maximum torque of 1 N m (0.7 lb ft).

Figure 3-2 Removing the standard drive size 1 terminal covers

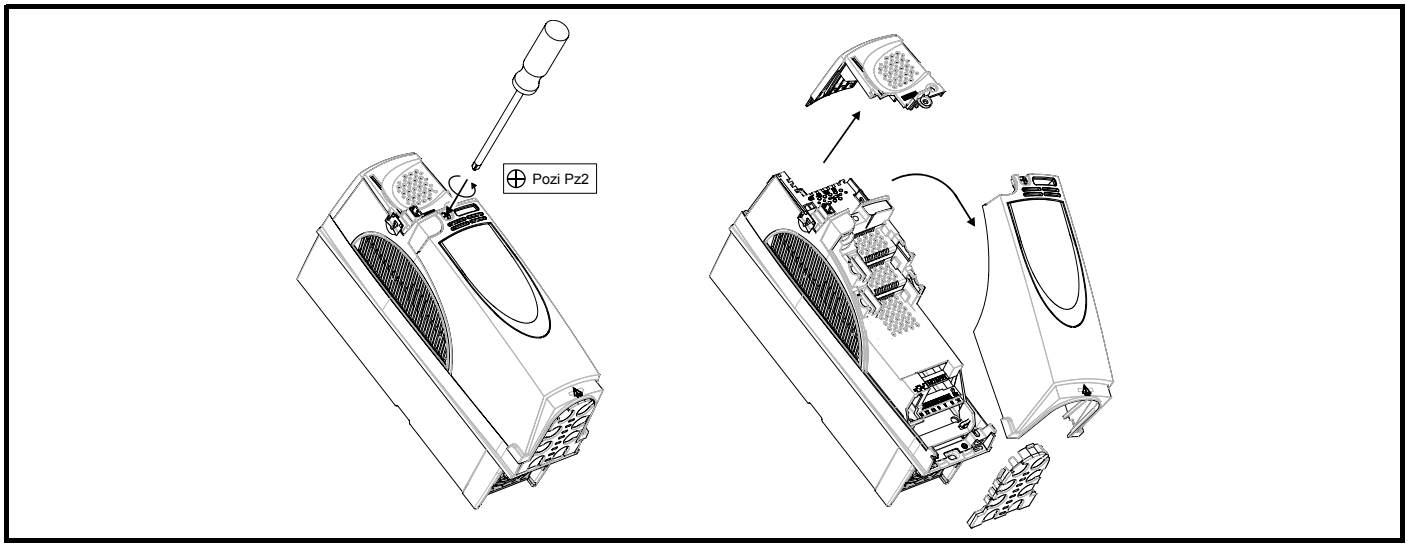

Figure 3-3 Removing the standard drive size 2 terminal covers

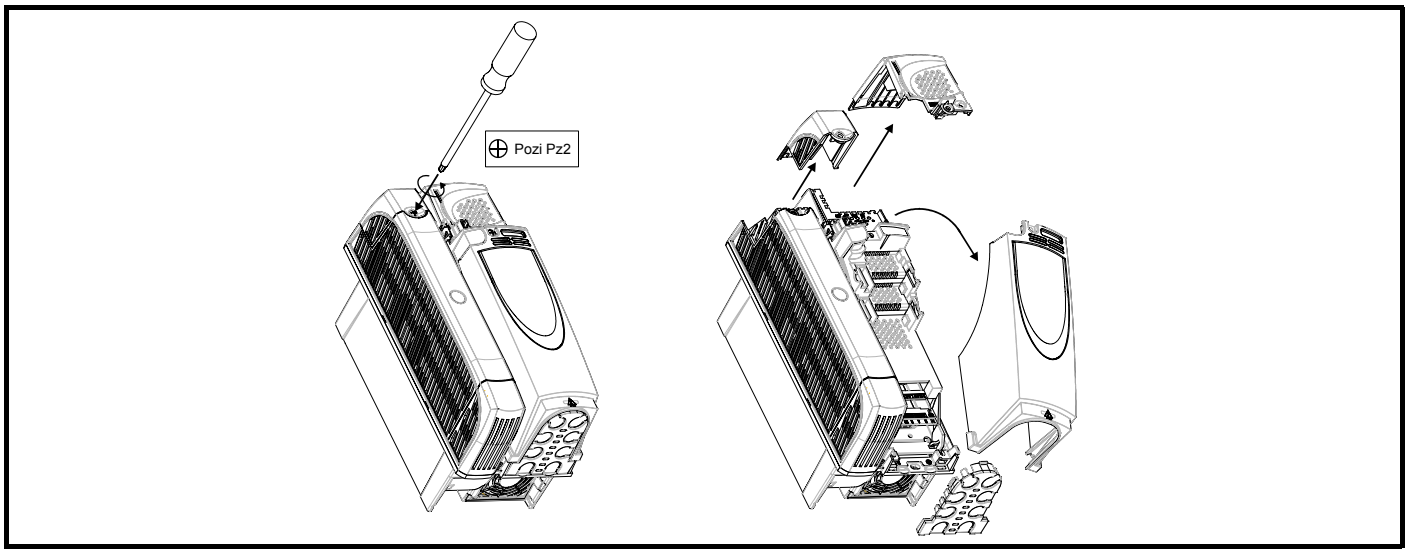

Figure 3-4 Removing the standard drive size 3 terminal covers

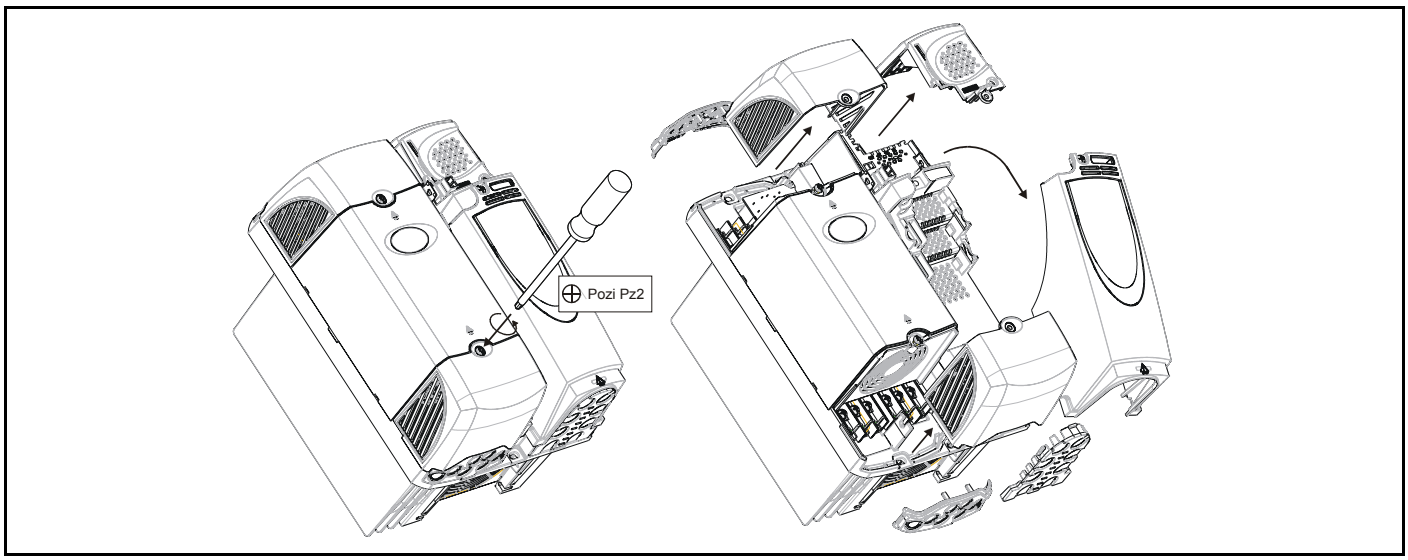

Figure 3-5 Removing the size 4, 5 and 6 standard drive terminal covers (size 4 illustrated)

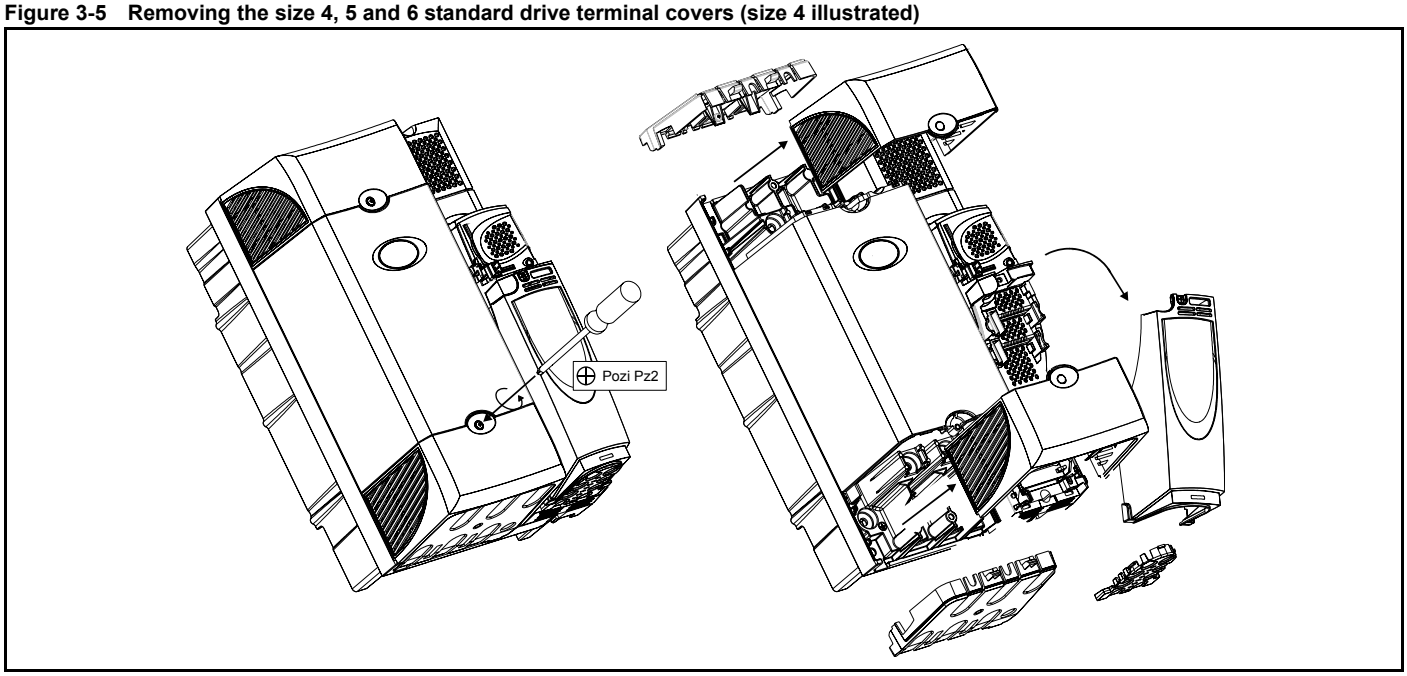

3.3.2 Removing the finger-guard and DC terminal cover break-outs

Figure 3-6 Removing the finger-guard break-outs

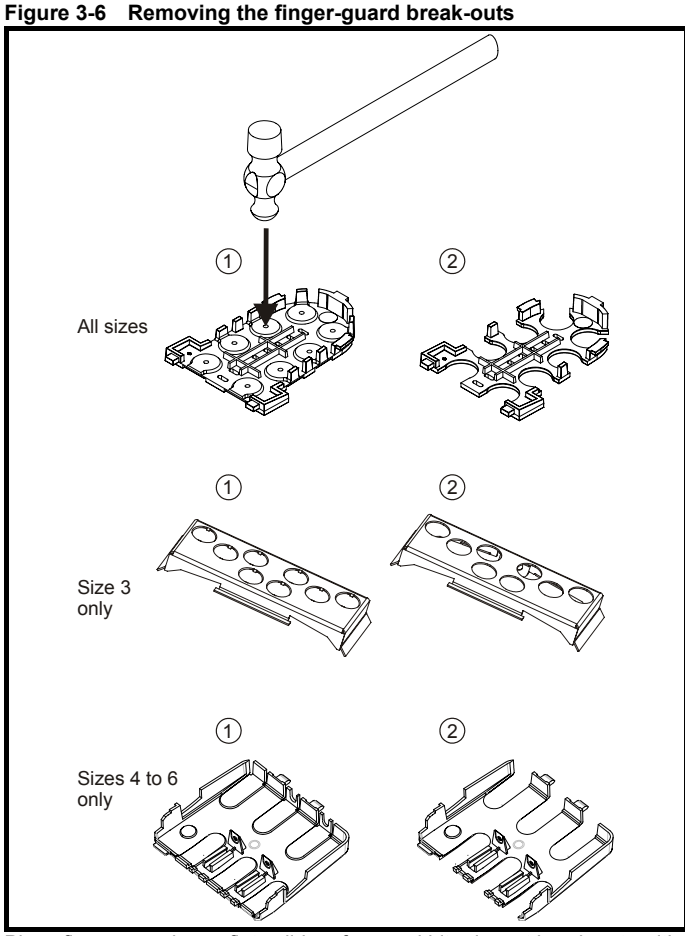

Place finger-guard on a flat solid surface and hit relevant break-outs with hammer as shown (1). Continue until all required break-outs are removed (2). Remove any flash / sharp edges once the break-outs are removed.

Figure 3-7 Removing the DC terminal cover break-outs

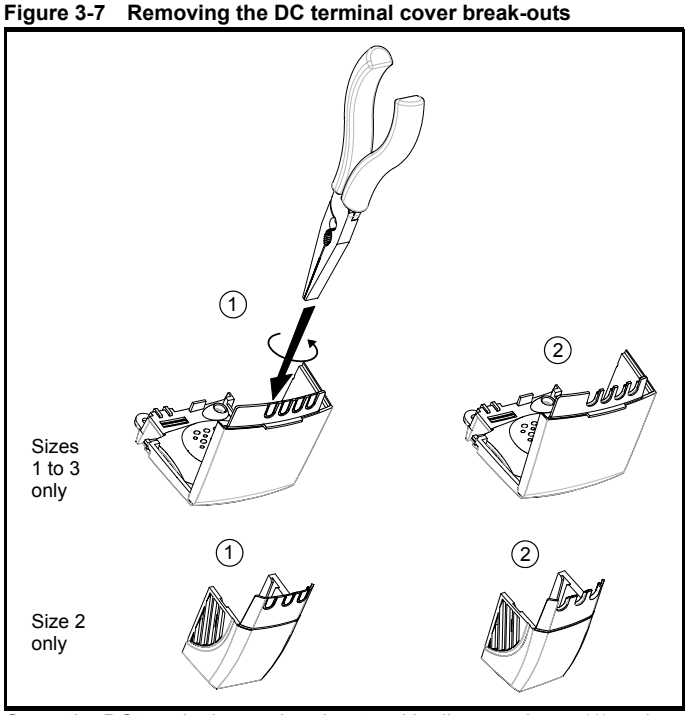

Grasp the DC terminal cover break-outs with pliers as shown (1) and twist to remove. Continue until all required break-outs are removed (2).

Remove any flash / sharp edges once the break-outs are removed. Use the DC terminal cover grommets supplied in the accessory box (Table 2-8 on page 18) to maintain the seal at the top of the drive.

Grommets are available for the size 4 to 6 finger-guards. Two versions are available allowing for either single or double cable entries. These are not required if the optional conduit box is installed.

Figure 3-8 Size 4 to 6 finger-guard grommets

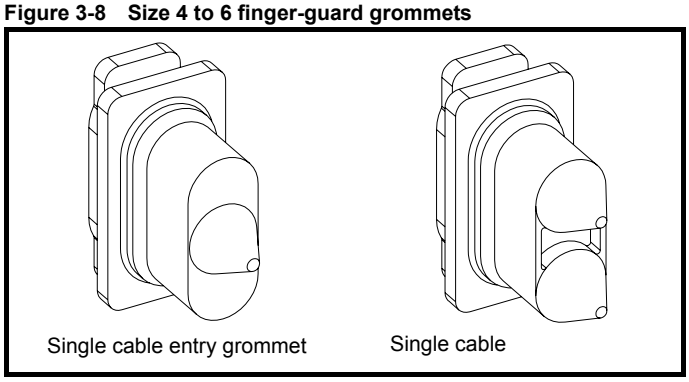

The grommets are available as a kit of four grommets under the following part numbers:

9500-0074 Kit of four single entry grommets

9500-0075 Kit of four double entry grommets

3.3.3 Conduit connection boxes

Conduit connection boxes are available as an option. Figure 3-9 demonstrates a conduit connection box installed on a size 4 standard drive.

For further information, refer to section 3.5 *Mounting methods* on page 25.

Figure 3-9 Size 4 standard drive with conduit connection box installed

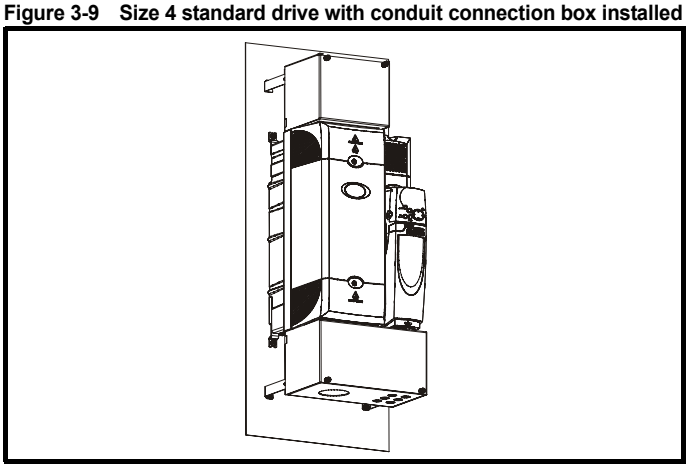

Table 3-1 Conduit box part numbers

Frame size	Top conduit box	Bottom conduit box
1		6500-0008
2		6500-0011
3	6500-0033*	6500-0014
4	6500-0017	6500-0018
5	6500-0023	6500-0024
6	6500-0027	6500-0028

*For DC or brake connections only.

3.3.4 E12/E54 cover removal / installation

Figure 3-10 Removing the top cover

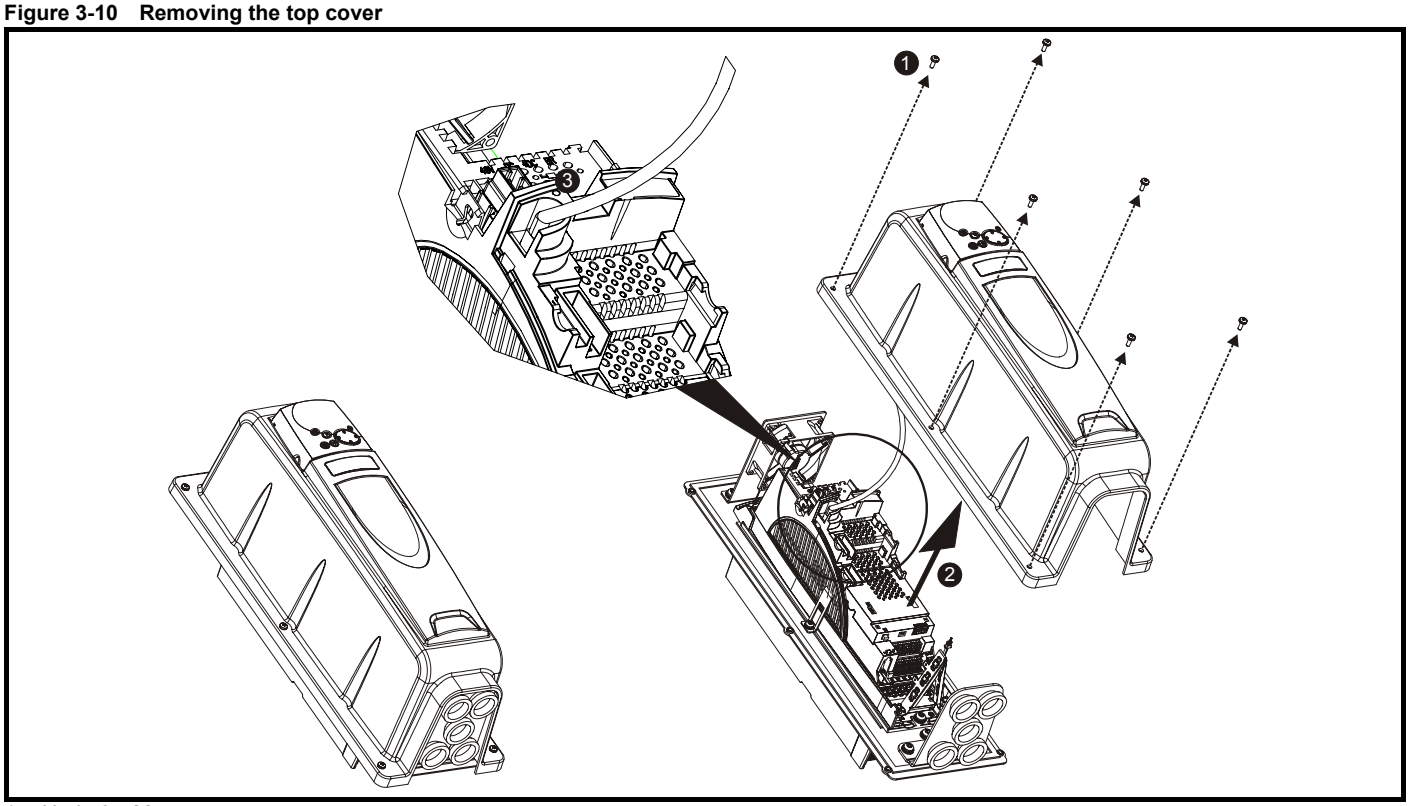

1. Undo 6 x M5 screws
2. Remove cover as shown
3. Disconnect the BA Keypad connector from the RJ 45 serial port
4. Reverse the above procedure to replace the cover

3.4 Solutions Module / keypad installation / removal

CAUTION

Power down the drive before installing / removing the Solutions Module. Failure to do so may result in damage to the product.

Figure 3-11 Installation and removal of a Solutions Module

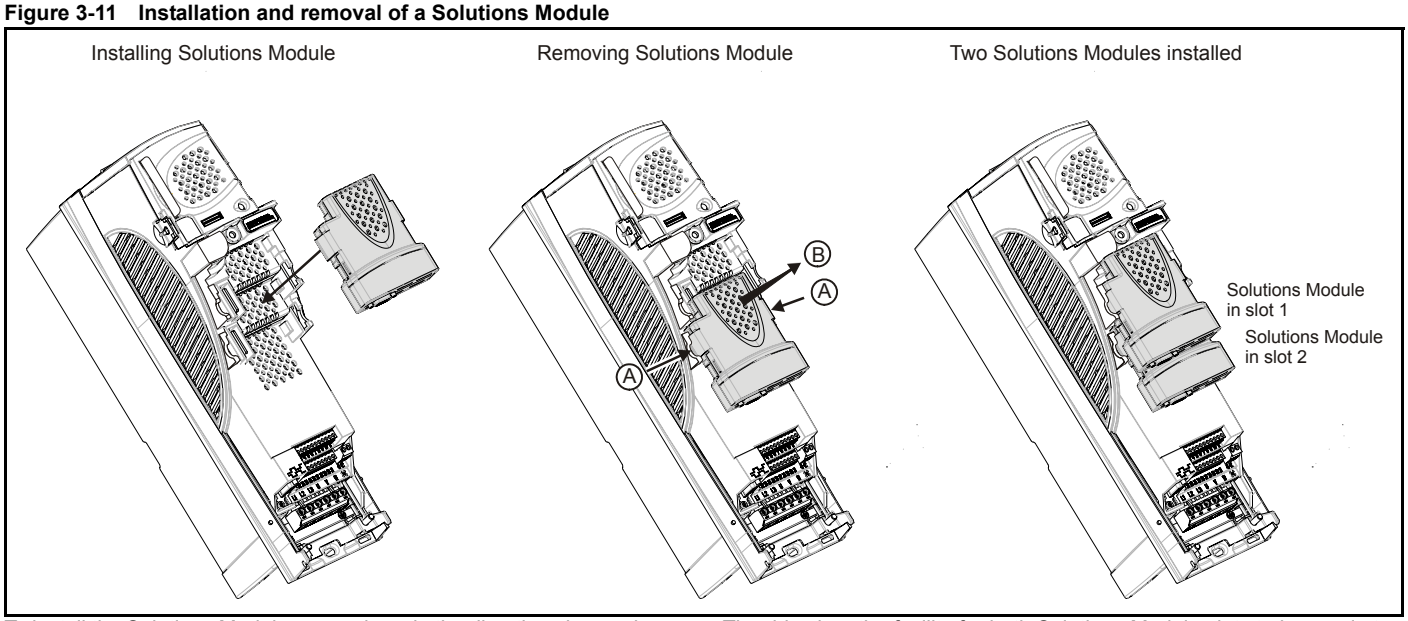

To install the Solutions Module, press down in the direction shown above until it clicks into place.

To remove the Solutions Module, press inwards at the points shown (A) and pull in the direction shown (B).

The drive has the facility for both Solutions Module slots to be used at the same time, as illustrated.

NOTE

It is recommended that Solutions Module slot 2 is used if only one module is installed.

Figure 3-12 Installation and removal of a keypad

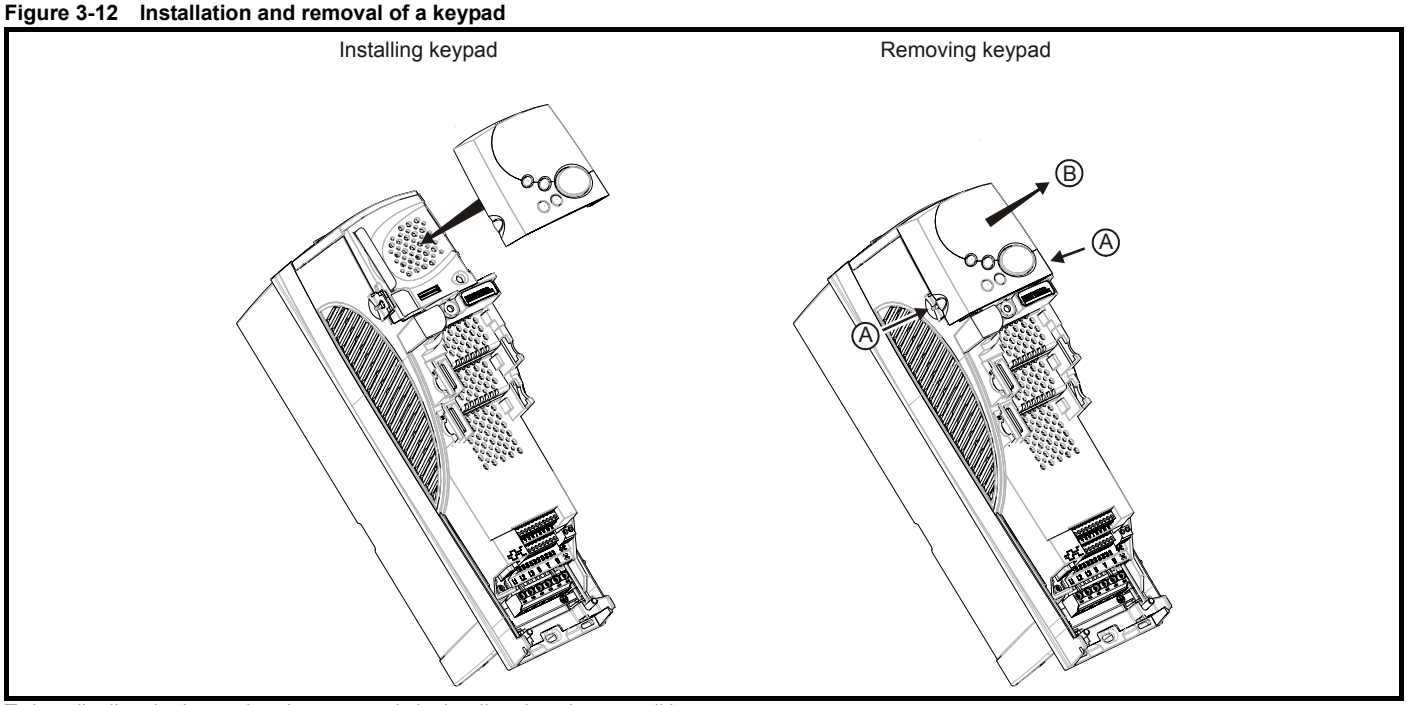

To install, align the keypad and press gently in the direction shown until it clicks into position.

To remove, while pressing the tabs inwards (A), gently lift the keypad in the direction indicated (B).

NOTE

The keypad can be installed / removed while the drive is powered up and running a motor, providing that the drive is not operating in hand, off or keypad mode.

NOTE

The keypad for the E12/E54 drive is installed to the top cover and connected to the drive via a cable.

3.5 Mounting methods

The standard drive can be either surface or through-panel mounted using the appropriate brackets.

The E12/E54 drive can only be surface mounted.

The following drawings show the dimensions of the drive and mounting holes for each method to allow a back plate to be prepared.

WARNING

The weights of the size 3 (E12/E54 drive) and size 4, 5 and 6 standard drives are as follows:

Size 3 (E12/E54): 25 kg (55 lb)
Size 4: 30 kg (66 lb)
Size 5: 55 kg (121 lb)
Size 6: 75 kg (165 lb)

Use appropriate safeguards when lifting these models

WARNING

If the drive has been used at high load levels for a period of time, the heatsink can reach temperatures in excess of 70°C (158°F). Human contact with the heatsink should be prevented.

3.5.1 Standard drive surface mounting

The standard drives are rated to IP20/NEMA1. Drive sizes 1 to 3 conform to UL Type 1 and sizes 4 to 6 are Open Class. If the optional conduit box is installed, then drive sizes 4 to 6 conform to UL Type 1. Refer to Table 3-1 on page 23 for conduit box part numbers.

Figure 3-13 Surface mounting the standard size 1 drive with conduit connection box installed

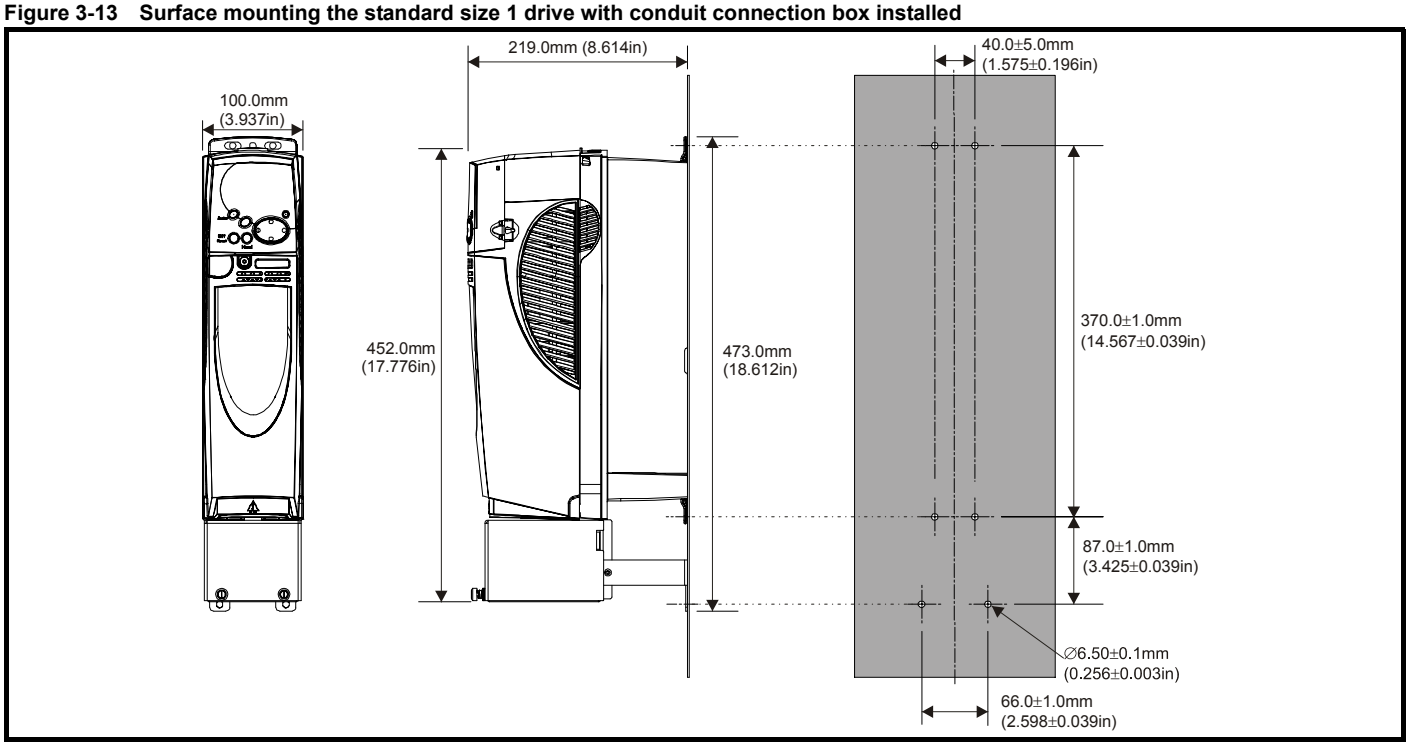

Figure 3-14 Surface mounting the standard size 2 drive with conduit connection box installed

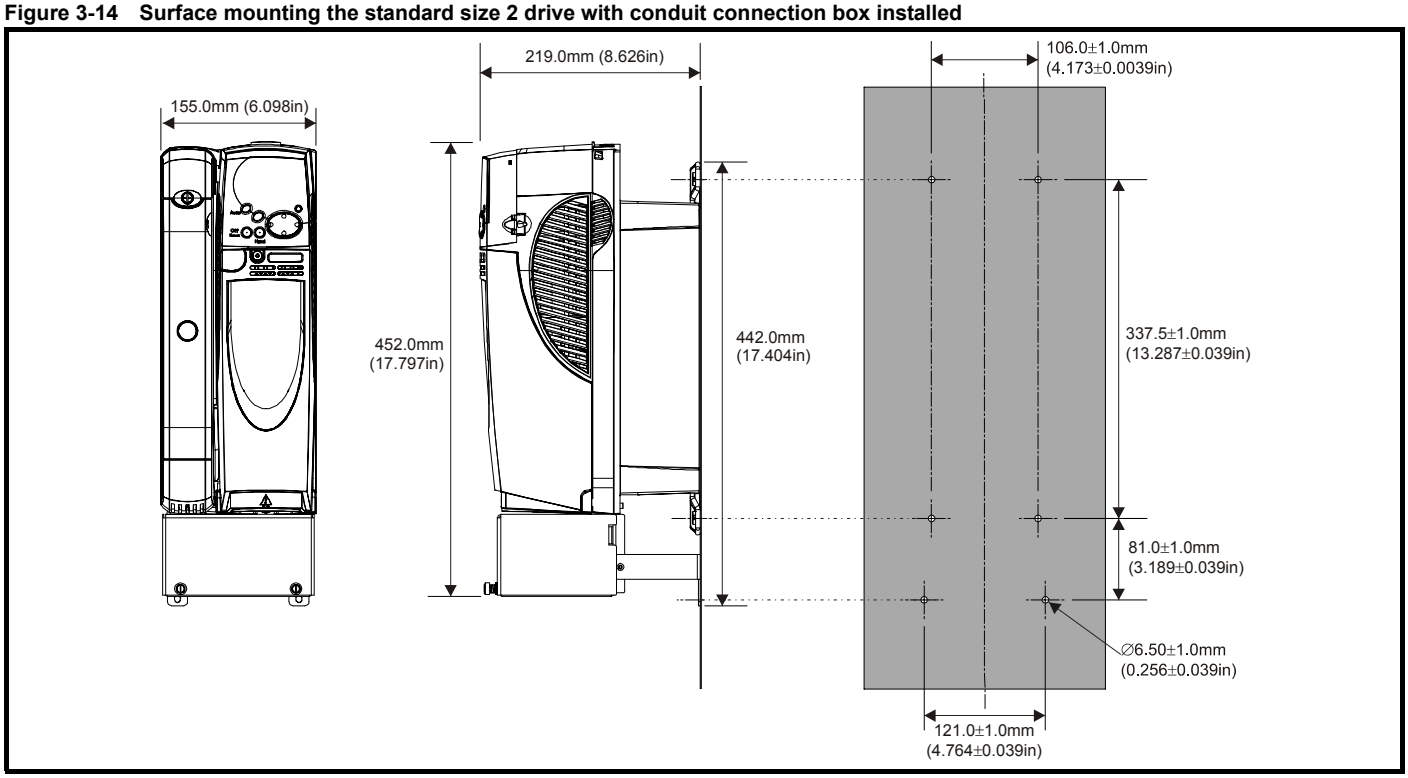

Figure 3-15 Surface mounting the standard size 3 drive with conduit connection boxes installed

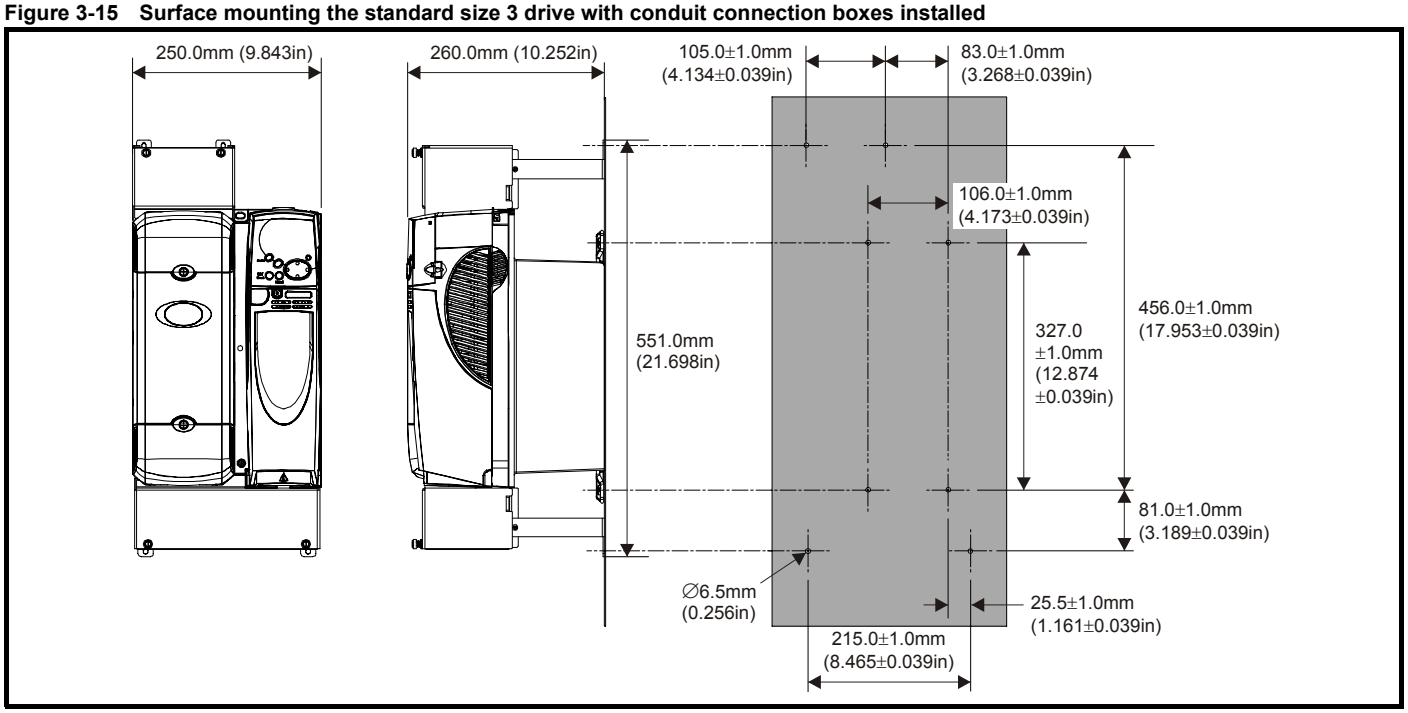

Figure 3-16 Surface mounting the standard size 4 drive with conduit connection boxes installed

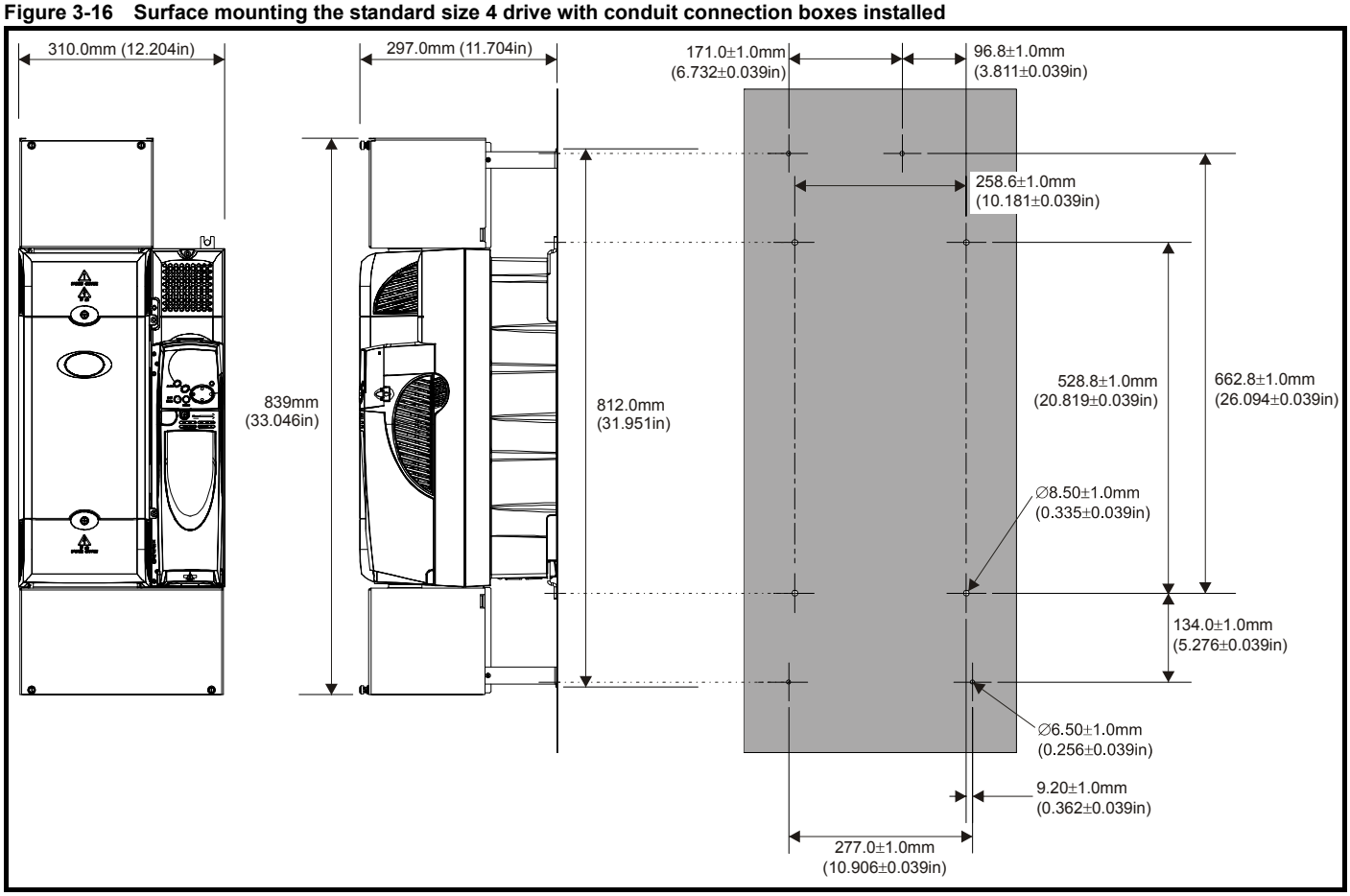

Figure 3-17 Surface mounting the standard size 5 drive with conduit connection boxes installed

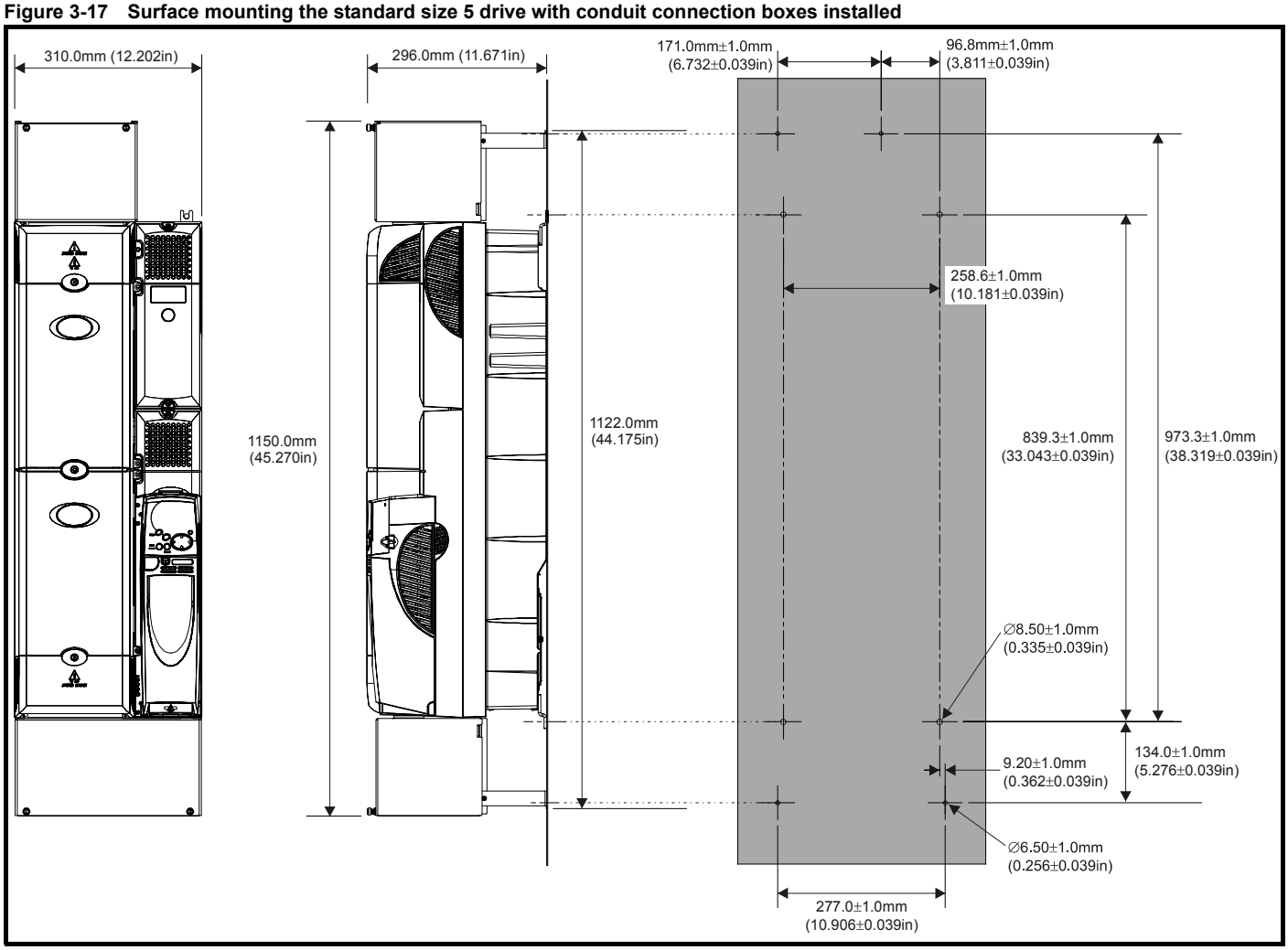

Figure 3-18 Surface mounting the standard size 6 drive with conduit connection boxes installed

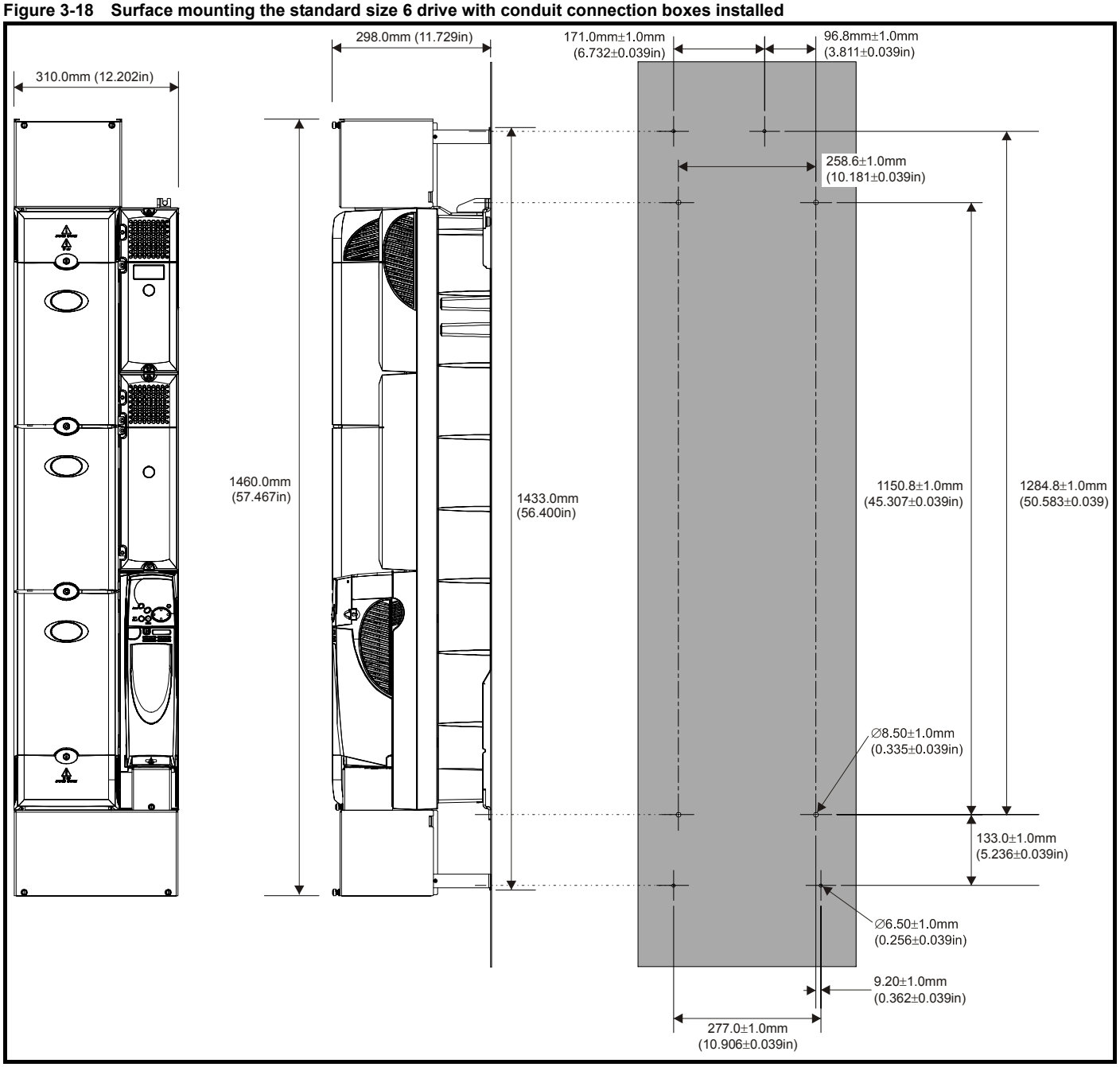

3.5.2 Standard drive through-panel mounting

When the standard drive is through-panel mounted, the main terminal cover(s) must be removed in order to provide access to the mounting holes. Once the drive has been mounted, the terminal cover(s) can be replaced.

The conduit connection box cannot be used when through-panel mounting the standard drive‘

NOTE

In order to achieve IP54 rating (UL Type 12 / NEMA 12) for through-panel mounting, an IP54 insert must be installed (size 1 and 2) and the heatsink fan should be replaced with an IP54 rated fan (sizes 1 to 4). Additionally, the gasket provided should be installed between the drive and the backplate to ensure a good seal for the enclosure. If the heatsink mounted braking resistor is to be used with the drive through-panel mounted, refer to the specific *Braking resistor installation sheet*. For further information refer to section 3.8 *Enclosing standard drive for high environmental protection* on page 40.

Figure 3-19 Through-panel mounting the standard size 1 drive

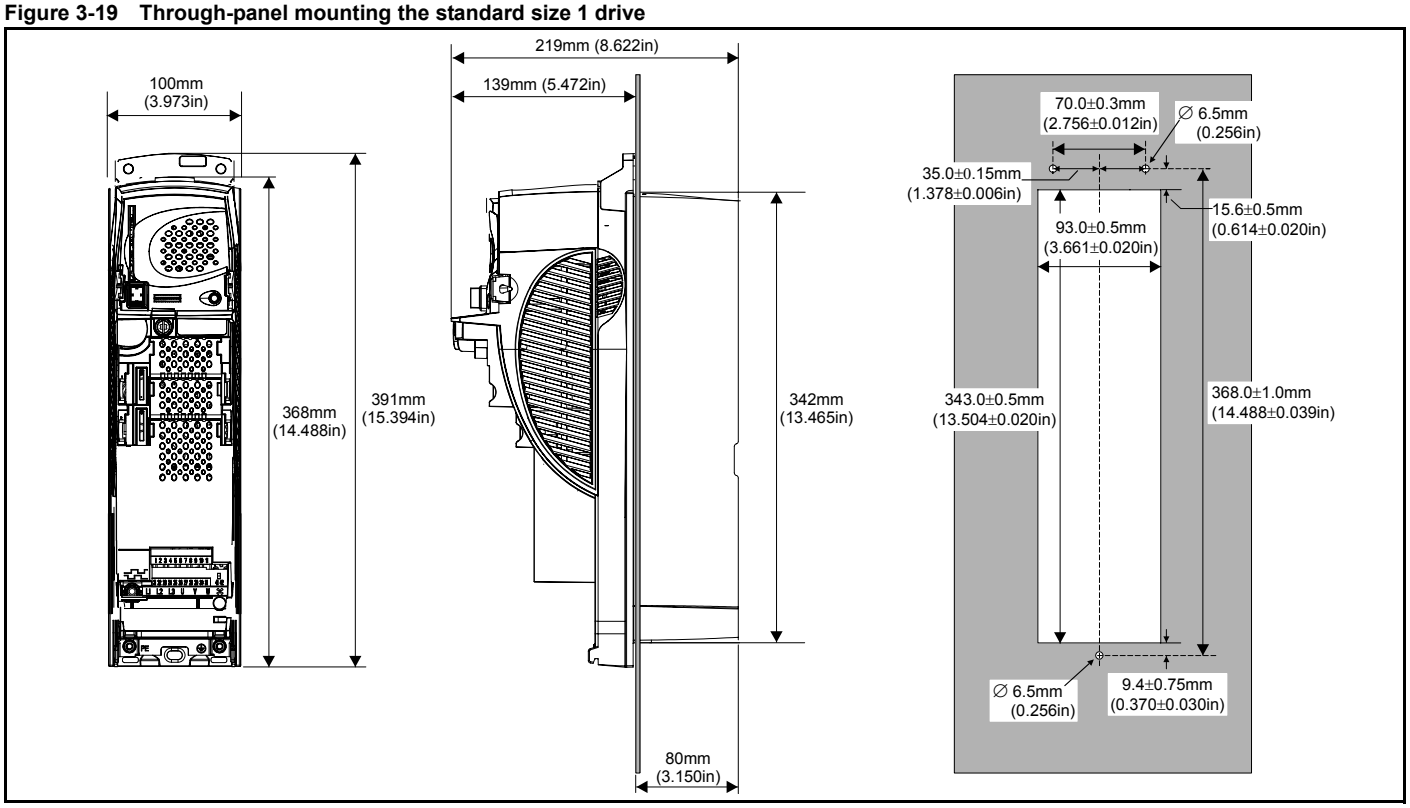

Figure 3-20 Through-panel mounting the standard size 2 drive

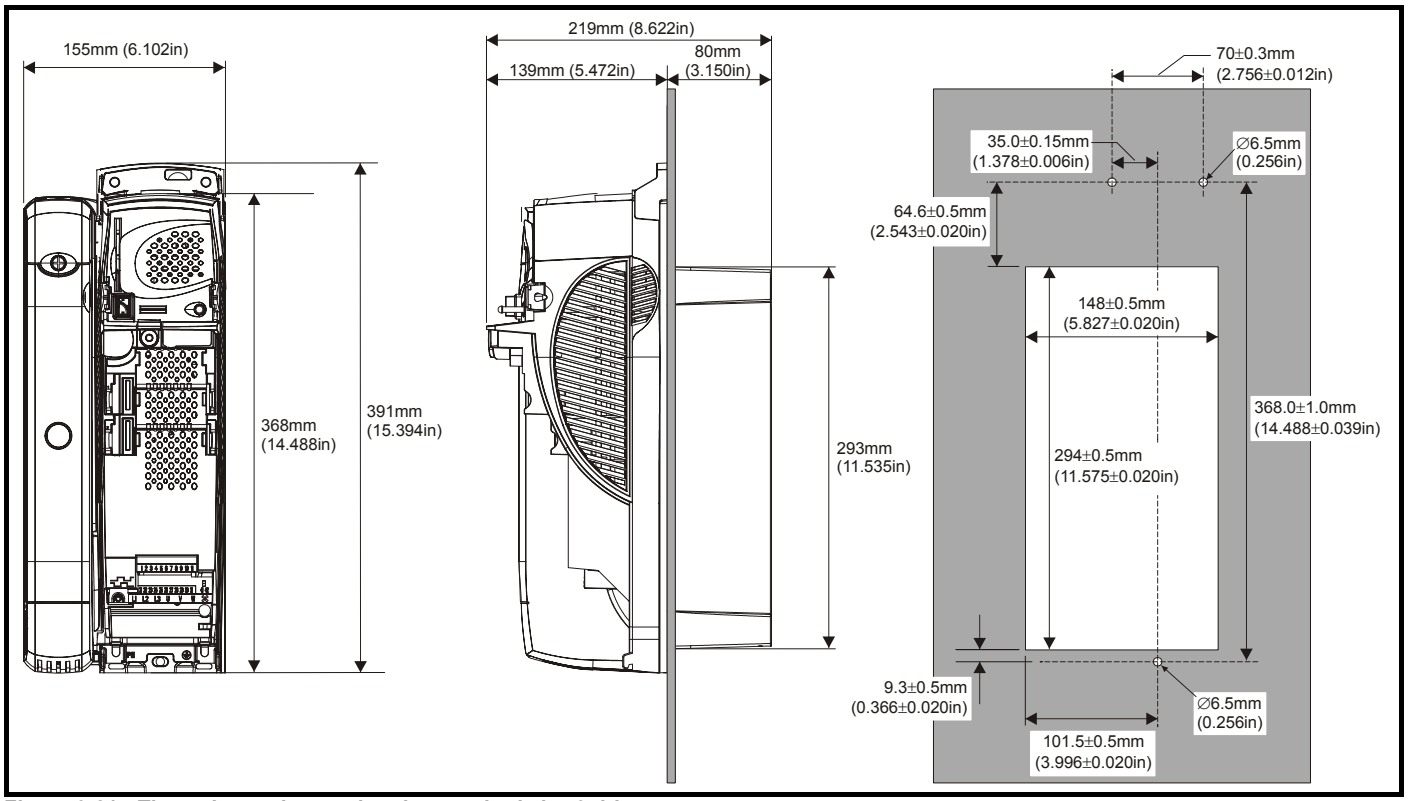

Figure 3-21 Through-panel mounting the standard size 3 drive

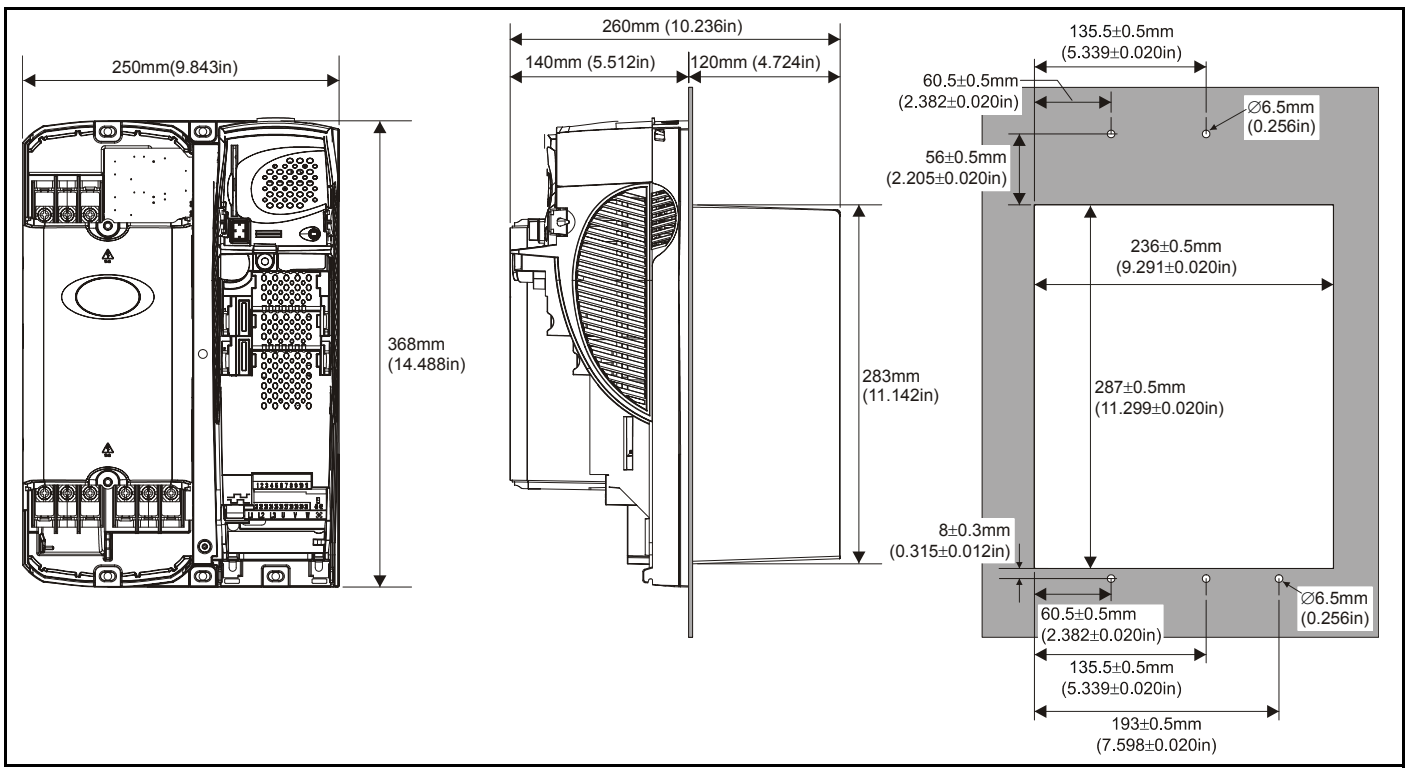

Figure 3-22 Through-panel mounting the standard size 4 drive

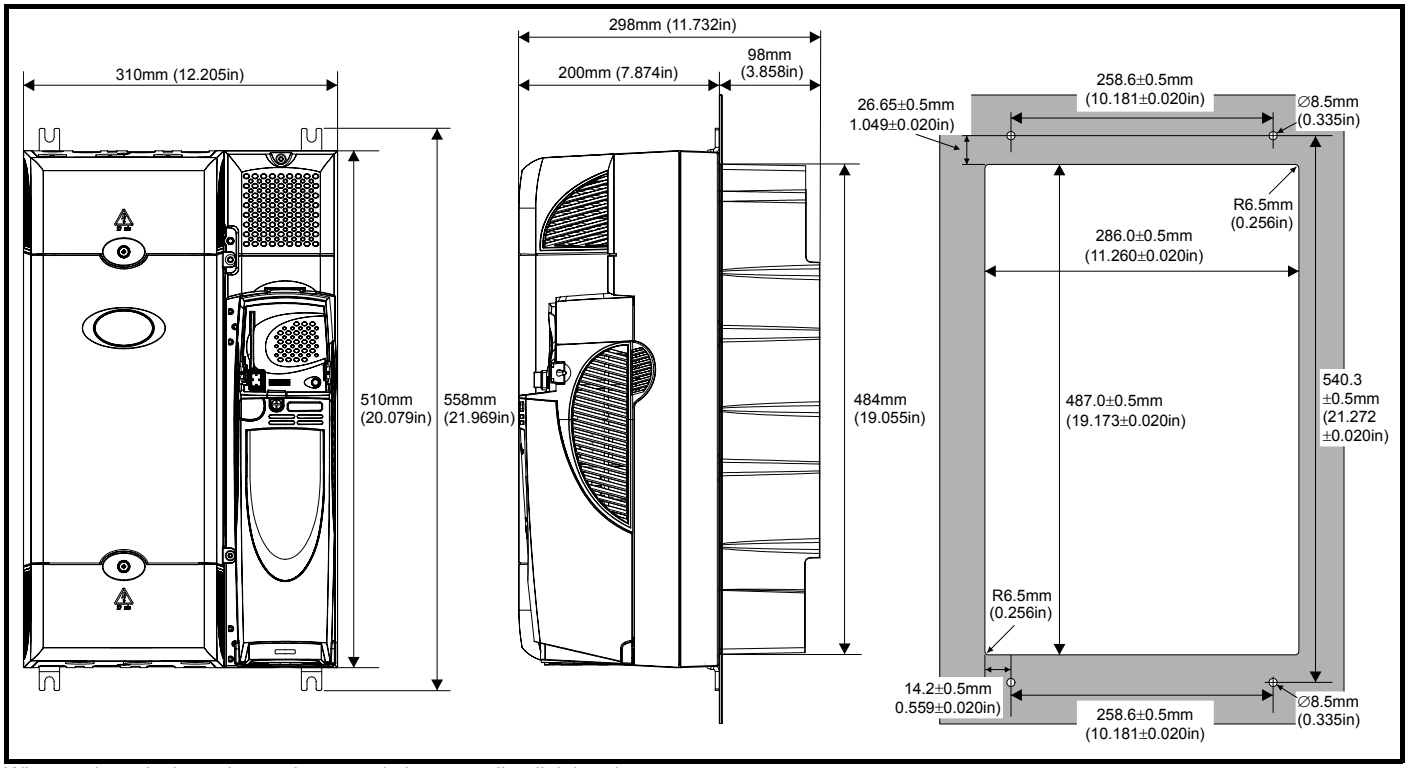

When a size 4 is through-panel mounted, the grounding link bracket must be folded upwards. This is required to provide a grounding point for the grounding bracket. See section 4.10.1 *Grounding hardware* on page 64 for more information.

Figure 3-23 Through-panel mounting the standard size 5 drive

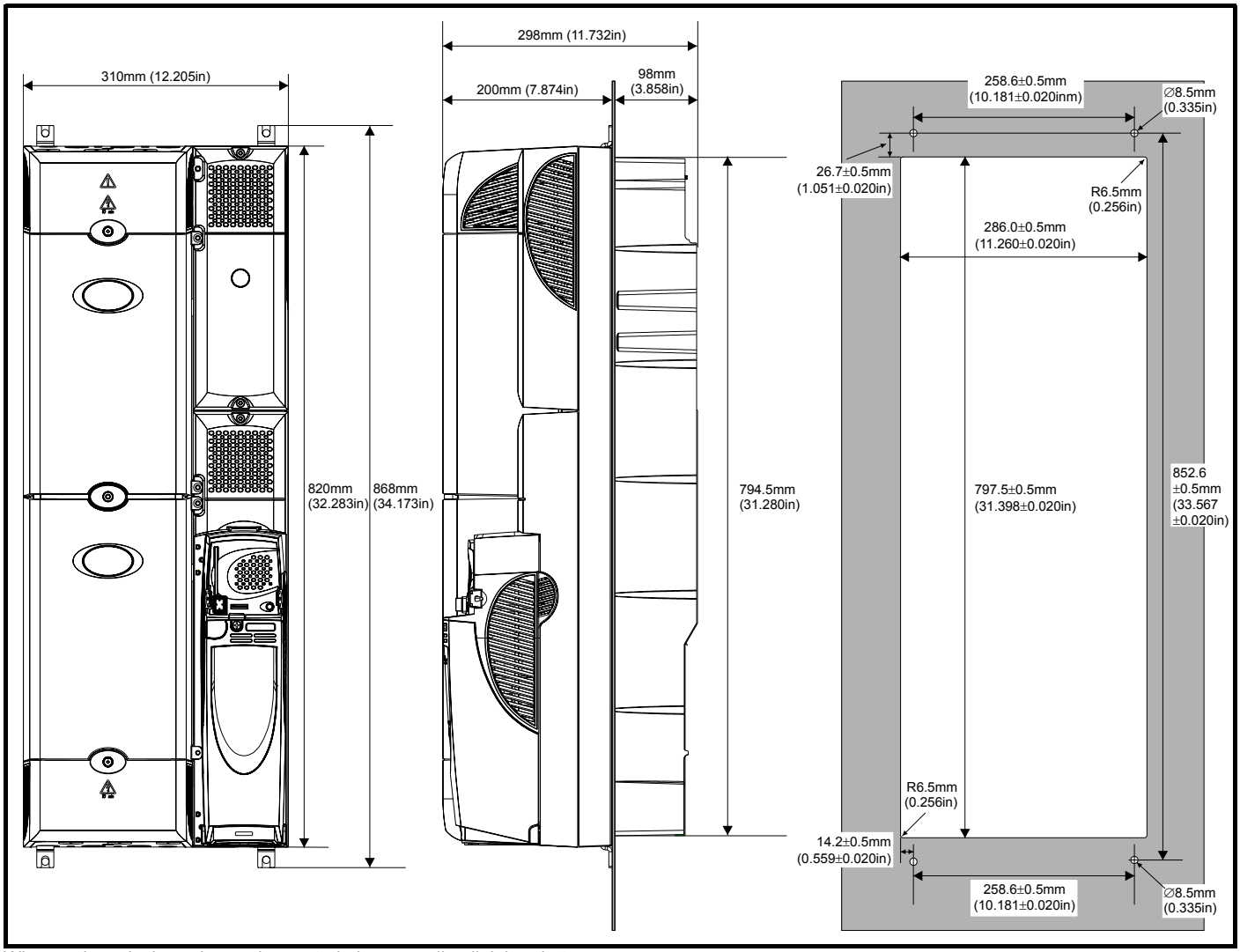

When a size 5 is through-panel mounted, the grounding link bracket must be folded upwards. This is required to provide a grounding point for the grounding bracket. See section 4.10.1 *Grounding hardware* on page 64 for more information.

Figure 3-24 Through-panel mounting the standard size 6 drive

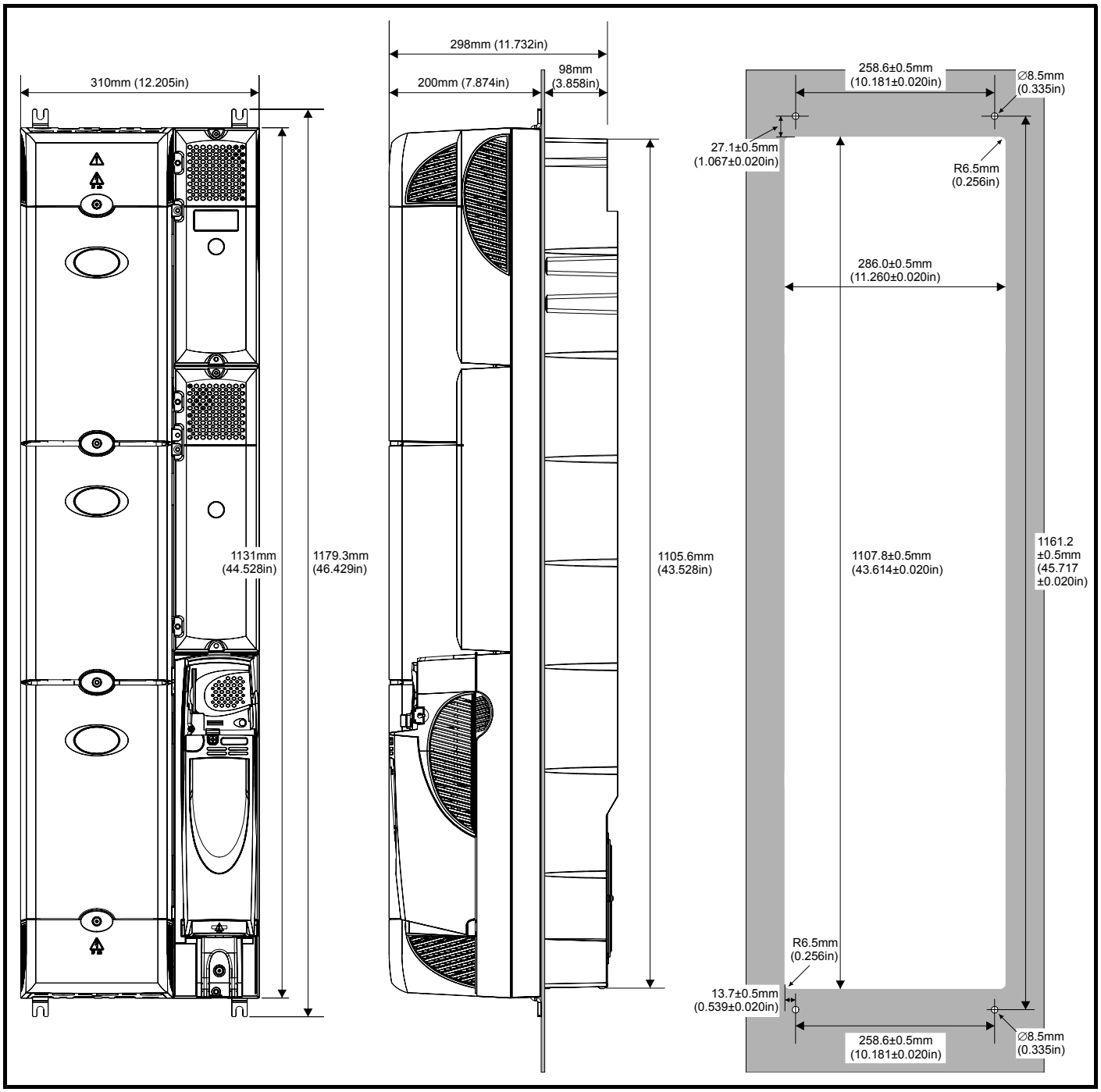

3.5.3 Standard drive surface and through-panel mounting brackets

Table 3-2 Mounting brackets (Standard)

Model size	Surface	Through-panel	Hole size
1	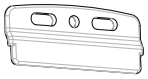 x2	 x1	6.5mm (0.256in)
2	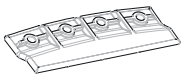 x2	 x1	
3	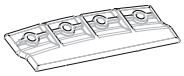 x2		
4	 x4		8.5mm (0.335in)
5 & 6	 x4		
	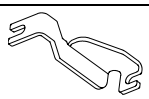 x2		

To avoid damaging the through-panel mounting bracket when through-panel mounting a size 1 or size 2, the through-panel mounting bracket should be used to fix the top of the drive to the back plate before the bottom of the drive is fixed to the back plate. The tightening torque should be 4 N m (2.9 lb ft).

3.5.4 Installation of the mounting bracket on size 4, 5 and 6

Size 4, 5 and 6 use the same mounting brackets for surface and through-panel mounting.

The mounting bracket has a long section and a short section.

Figure 3-25 Size 4, 5 and 6 mounting bracket

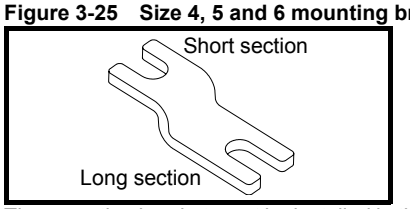

The mounting bracket must be installed in the correct orientation with the long section inserted into or attached to the drive and the short section is attached to the back plate. Figure 3-26 shows the orientation of the mounting bracket when the drive is surface and through-panel mounted.

Figure 3-26 Orientation of the size 4, 5 and 6 mounting bracket

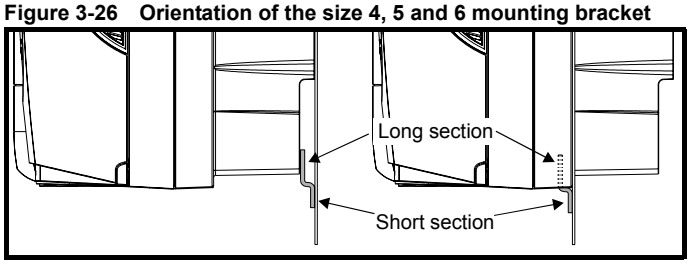

Size 5 and 6 also requires two top mounting brackets when the drive is surface mounted. The two brackets should be installed to the top of the drive as shown in Figure 3-27.

The maximum torque setting for the screws into the drive chassis is 10 N m (7.4 lb. ft).

Figure 3-27 Location of top surface mounting brackets for size 5 and 6

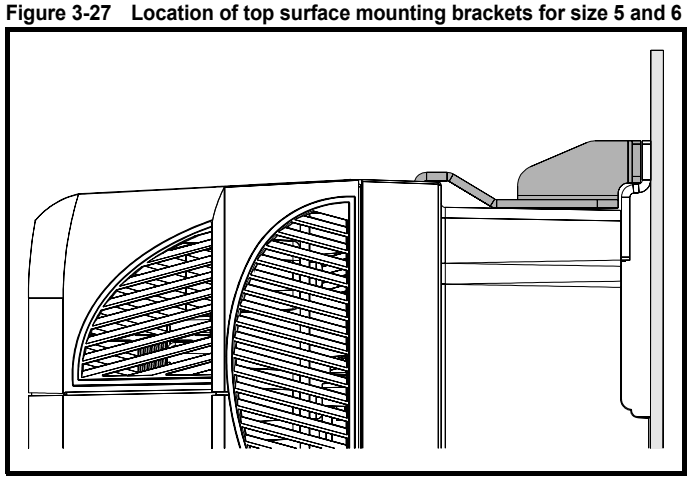

3.5.5 E12/E54 drive surface mounting

Figure 3-28 Size 1 E12/E54 drive surface mounting

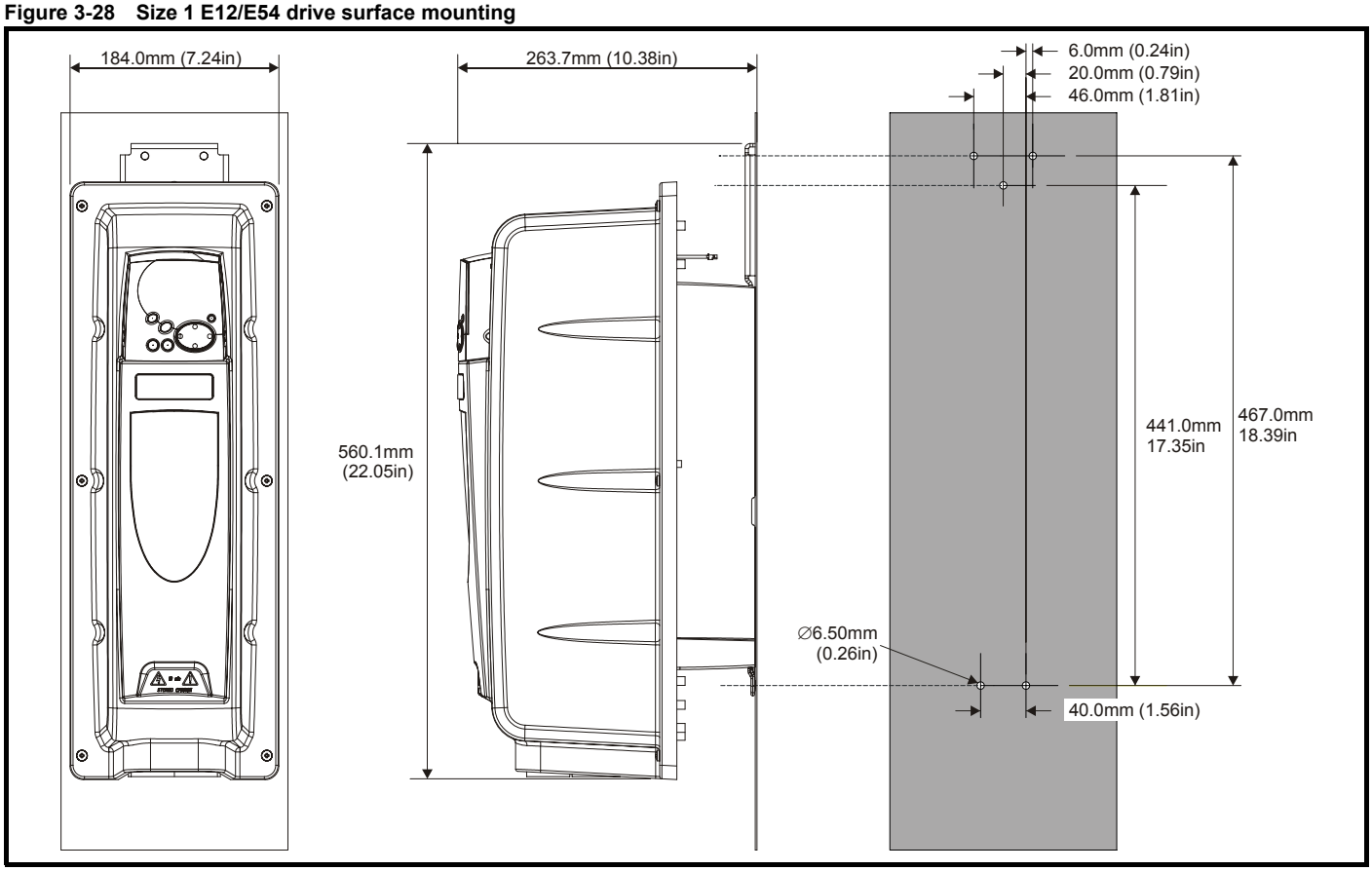

Figure 3-29 Size 2 E12/E54 drive surface mounting

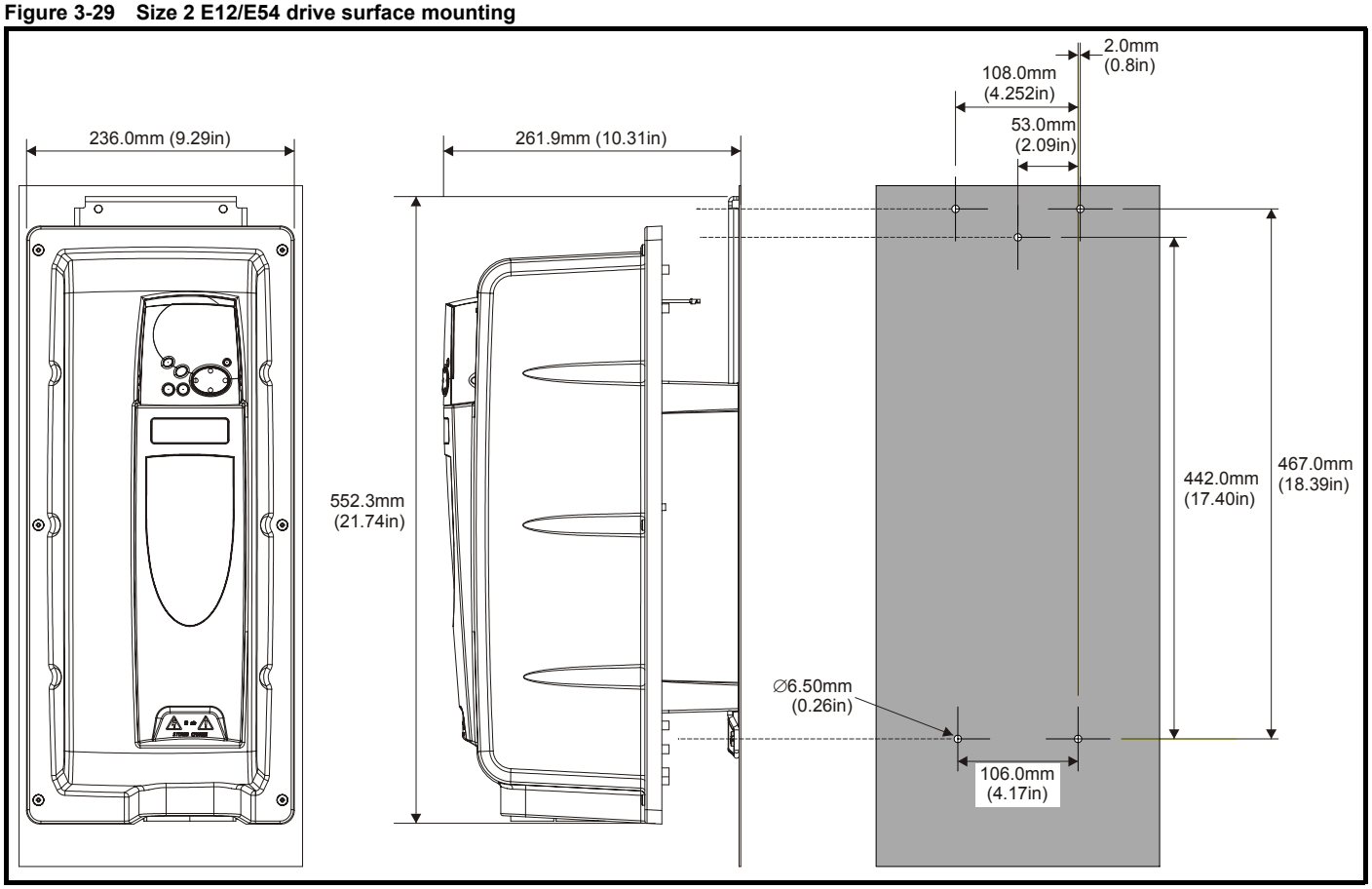

Figure 3-30 Size 3 E12/E54 drive surface mounting

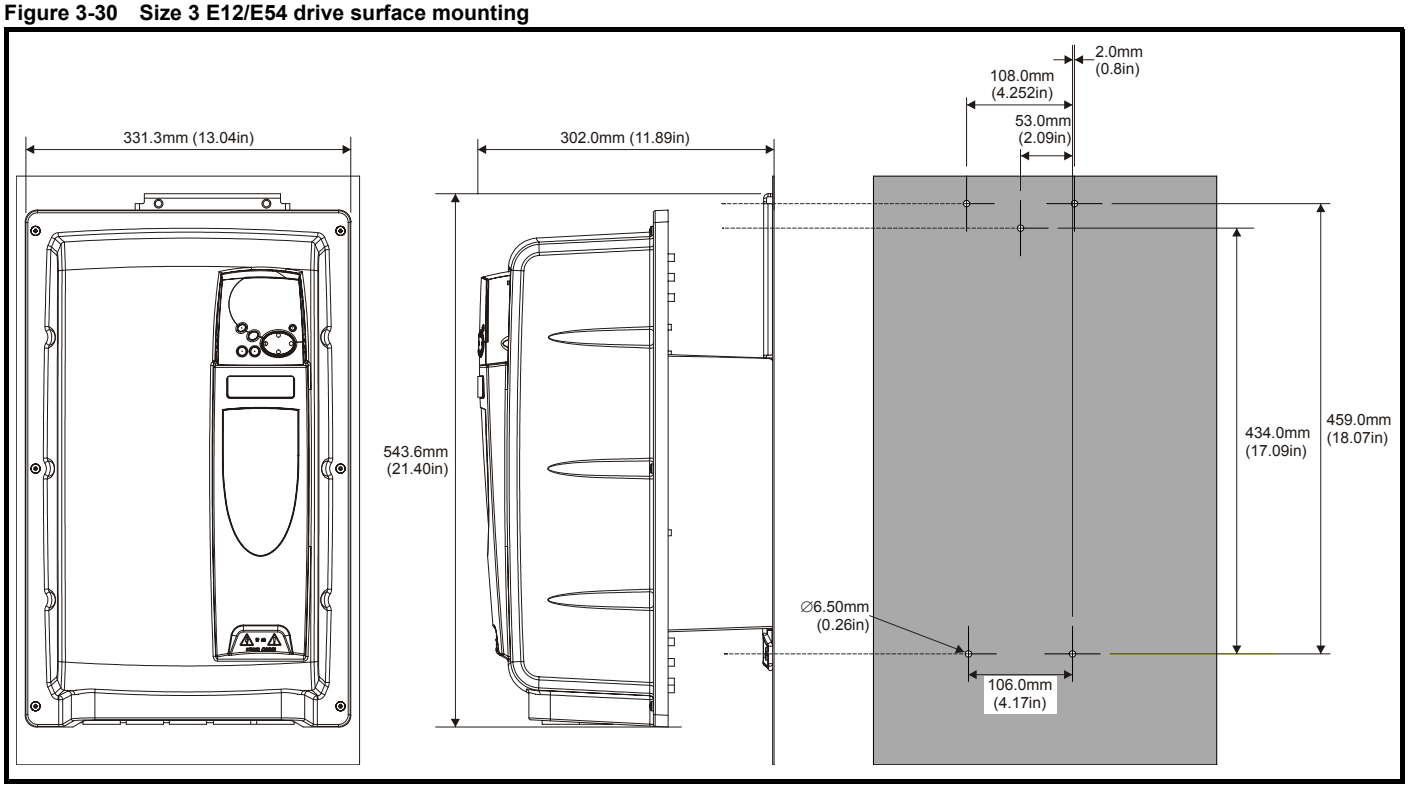

Table 3-3 E12/E54 mounting brackets

Model size	E12/E54 surface mounting brackets				Hole size
1	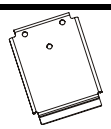	x1		x2	M6
2	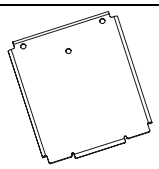	x1	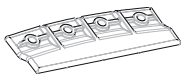	x2	M6
3	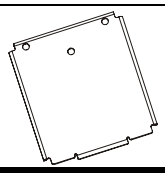	x1	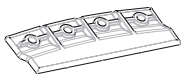	x2	M6

Only two of the brackets illustrated in Table 3-3 are required when surface mounting the E12/E54 drive. It is recommended as standard that one of each type is used as illustrated in Figure 3-28, Figure 3-29, Figure 3-30. However, if the E12/E54 drive is to be footprint mounted to an external EMC filter, both the smaller surface mounting brackets should be used.

3.6 Enclosure for standard drives

3.6.1 Enclosure layout

Please observe the clearances in the diagram below taking into account any appropriate notes for other devices / auxiliary equipment when planning the installation.

Figure 3-31 Enclosure layout

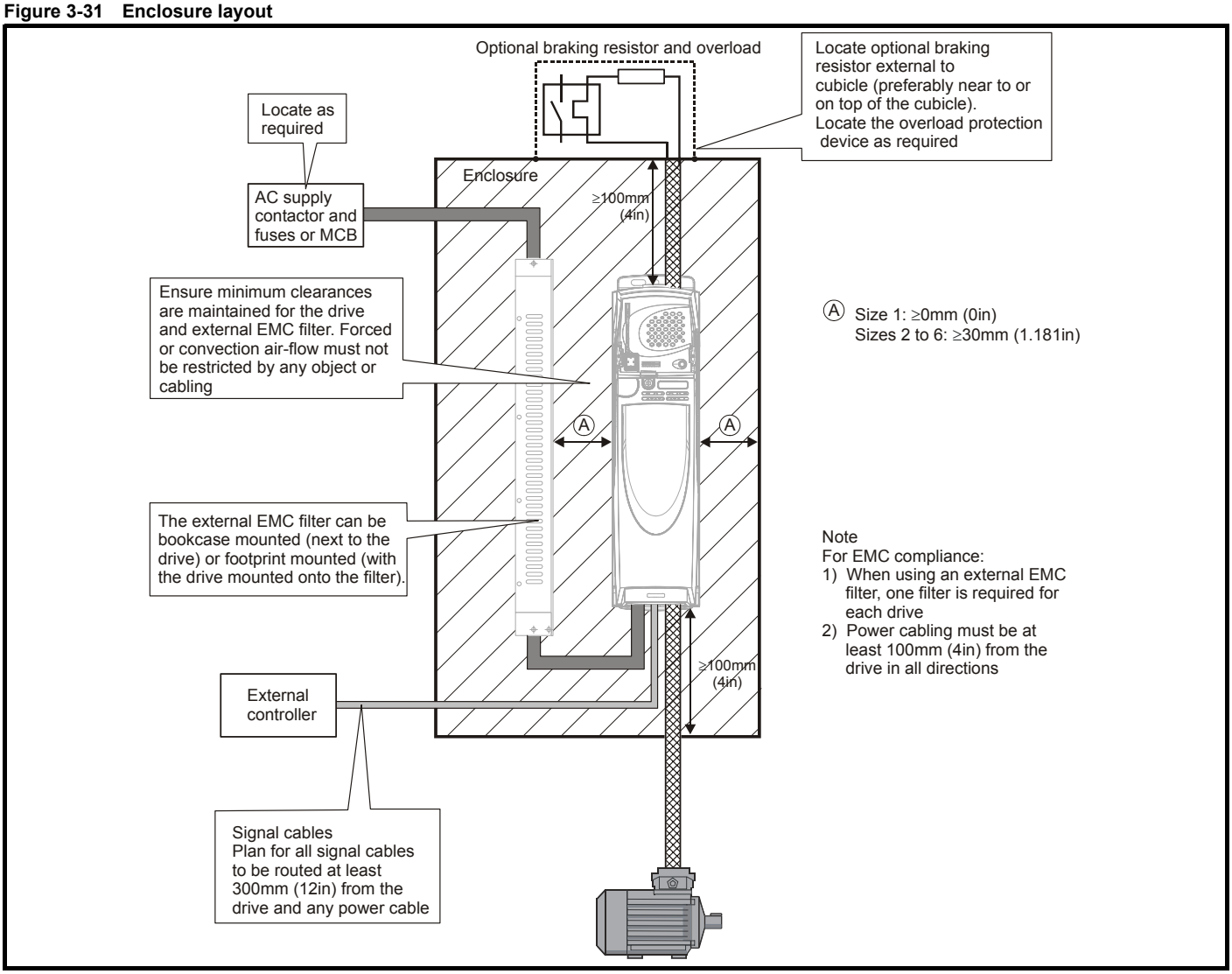

3.6.2 Enclosure sizing

1. Add the dissipation figures from section 13-4 *Losses @ 40°C (104°F) ambient for wall mounted drives* on page 222 for each drive that is to be installed in the enclosure.
2. If an external EMC filter is to be used with each drive, add the dissipation figures from section 13.2.1 *EMC filter ratings* on page 233 for each external EMC filter that is to be installed in the enclosure.
3. If the braking resistor is to be mounted inside the enclosure, add the average power figures from for each braking resistor that is to be installed in the enclosure.
4. Calculate the total heat dissipation (in Watts) of any other equipment to be installed in the enclosure.
5. Add the heat dissipation figures obtained above. This gives a figure in Watts for the total heat that will be dissipated inside the enclosure.

Calculating the size of a sealed enclosure

The enclosure transfers internally generated heat into the surrounding air by natural convection (or external forced air flow); the greater the surface area of the enclosure walls, the better is the dissipation capability. Only the surfaces of the enclosure that are unobstructed (not in contact with a wall or floor) can dissipate heat.

Calculate the minimum required unobstructed surface area $\mathbf{A_e}$ for the enclosure from:

$$\mathbf{A_e} = \frac{\mathbf{P}}{\mathbf{k}(\mathbf{T_{int}} - \mathbf{T_{ext}})}$$

Where:

$\mathbf{A_e}$	Unobstructed surface area in m^2 (1 m^2 = 10.9 ft^2)
$\mathbf{T_{ext}}$	Maximum expected temperature in ^oC *outside* the enclosure
$\mathbf{T_{int}}$	Maximum permissible temperature in ^oC *inside* the enclosure
P	Power in Watts dissipated by *all* heat sources in the enclosure
k	Heat transmission coefficient of the enclosure material in $W/m^2/^oC$

Example

To calculate the size of an enclosure for the following:

- Two BA1406 models operating at the Normal Duty rating
- Each drive to operate at 6kHz PWM switching frequency
- Schaffner 16 A (4200-6119) external EMC filter for each drive
- Braking resistors are to be mounted outside the enclosure

- Maximum ambient temperature inside the enclosure: 40°C
- Maximum ambient temperature outside the enclosure: 30°C

Dissipation of each drive: 147 W (see section 13-4 *Losses @ 40°C (104°F) ambient for wall mounted drives* on page 222)

Dissipation of each external EMC filter: 9.2 W (max) (see section 13.2.1 *EMC filter ratings* on page 233)

Total dissipation: 2 x (147 + 9.2) =312.4 W

The enclosure is to be made from painted 2 mm (0.079 in) sheet steel having a heat transmission coefficient of 5.5 W/m^2/ºC. Only the top, front, and two sides of the enclosure are free to dissipate heat.

The value of 5.5 W/m^2/ºC can generally be used with a sheet steel enclosure (exact values can be obtained by the supplier of the material). If in any doubt, allow for a greater margin in the temperature rise.

Figure 3-32 Enclosure having front, sides and top panels free to dissipate heat

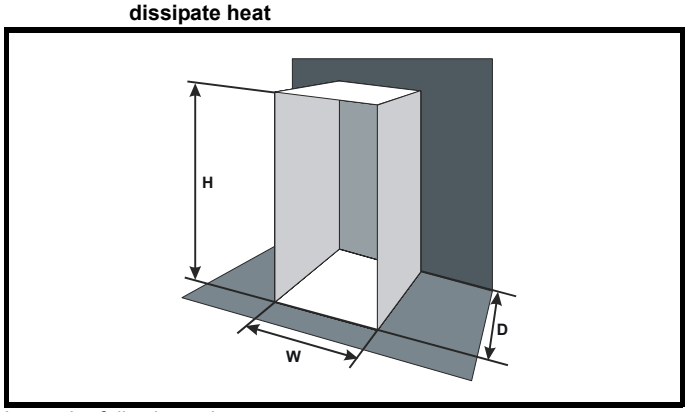

Insert the following values:

T_{int}	40°C
T_{ext}	30°C
k	5.5
P	312.4 W

The minimum required heat conducting area is then:

$$A_e = \frac{312.4}{5.5(40-30)}$$

=5.68 m^2 (61.9 ft^2) (1 m^2 = 10.9 ft^2)

Estimate two of the enclosure dimensions - the height (H) and depth (D), for instance. Calculate the width (W) from:

$$W = \frac{A_e - 2HD}{H + D}$$

Inserting **H** = 2m and **D** = 0.6m, obtain the minimum width:

$$W = \frac{5.68 - (2 \times 2 \times 0.6)}{2 + 0.6}$$

=1.262 m (49.7 in)

If the enclosure is too large for the space available, it can be made smaller only by attending to one or all of the following:

- Using a lower PWM switching frequency to reduce the dissipation in the drives
- Reducing the ambient temperature outside the enclosure, and/or applying forced-air cooling to the outside of the enclosure
- Reducing the number of drives in the enclosure
- Removing other heat-generating equipment

Calculating the air-flow in a ventilated enclosure

The dimensions of the enclosure are required only for accommodating the equipment. The equipment is cooled by the forced air flow.

Calculate the minimum required volume of ventilating air from:

$$V = \frac{3kP}{T_{int} - T_{ext}}$$

Where:

V	Air-flow in m^3 per hour (1 m^3/hr = 0.59 ft^3/min)
T_{ext}	Maximum expected temperature in °C *outside* the enclosure
T_{int}	Maximum permissible temperature in °C *inside* the enclosure
P	Power in Watts dissipated by *all* heat sources in the enclosure
k	Ratio of $\frac{P_o}{P_I}$

Where:

P_0 is the air pressure at sea level

P_I is the air pressure at the installation

Typically use a factor of 1.2 to 1.3, to allow also for pressure-drops in dirty air-filters.

Example

To calculate the size of an enclosure for the following:

- Three BA1403 models operating at the Normal Duty rating
- Each drive to operate at 6kHz PWM switching frequency
- Schaffner 10A (4200-6118) external EMC filter for each drive
- Braking resistors are to be mounted outside the enclosure
- Maximum ambient temperature inside the enclosure: 40°C
- Maximum ambient temperature outside the enclosure: 30°C

Dissipation of each drive: 61 W

Dissipation of each external EMC filter: 6.9 W (max)

Total dissipation: 3 x (61 + 6.9) = 203.7 W

Insert the following values:

T_{int}	40°C
T_{ext}	30°C
k	1.3
P	203.7 W

Then:

$$V = \frac{3 \times 1.3 \times 203.7}{40 - 30}$$

= 79.4 m^3/hr (46.9 ft^3 /min) (1 m^3/ hr = 0.59 ft^3/min)

3.7 Enclosure design and drive ambient temperature

Drive derating is required for operation in high ambient temperatures

Totally enclosing or through panel mounting the drive in either a sealed cabinet (no airflow) or in a well ventilated cabinet makes a significant difference on drive cooling.

The chosen method affects the ambient temperature value (T_{rate}) which should be used for any necessary derating to ensure sufficient cooling for the whole of the drive.

The ambient temperature for the four different combinations is defined below:

1. Totally enclosed with no air flow (<2 m/s) over the drive
   $T_{rate} = T_{int} + 5°C$
2. Totally enclosed with air flow (>2 m/s) over the drive
   $T_{rate} = T_{int}$
3. Through panel mounted with no airflow (<2 m/s) over the drive
   T_{rate} = the greater of T_{ext} +5°C, or T_{int}
4. Through panel mounted with air flow (>2 m/s) over the drive
   T_{rate} = the greater of T_{ext} or T_{int}

Where:

T_{ext} = Temperature outside the cabinet

T_{int} = Temperature inside the cabinet

T_{rate} = Temperature used to select current rating from tables in Chapter 13 *Technical Data* .

3.8 Enclosing standard drive for high environmental protection

An explanation of environmental protection rating is provided in section 13.1.9 *Environmental Protection Rating* on page 225.

The standard drive is rated to IP20 pollution degree 2 (dry, non-conductive contamination only) (NEMA 1). However, it is possible to configure the drive to achieve IP54 rating (UL Type 12 / NEMA 12) at the rear of the heatsink for through-panel mounting (some current derating is required for size 1 and 2).

This allows the front of the drive, along with various switchgear, to be housed in an IP54 (UL Type 12 / NEMA 12) enclosure with the heatsink protruding through the panel to the external environment. Thus, the majority of the heat generated by the drive is dissipated outside the enclosure maintaining a reduced temperature inside the enclosure. This also relies on a good seal being made between the heatsink and the rear of the enclosure using the gaskets provided.

For Type 12 the drive must be mounted on a flat surface of a Type 12 enclosure.

Figure 3-33 Example of IP54 (UL Type 12 / NEMA 12) through-panel layout

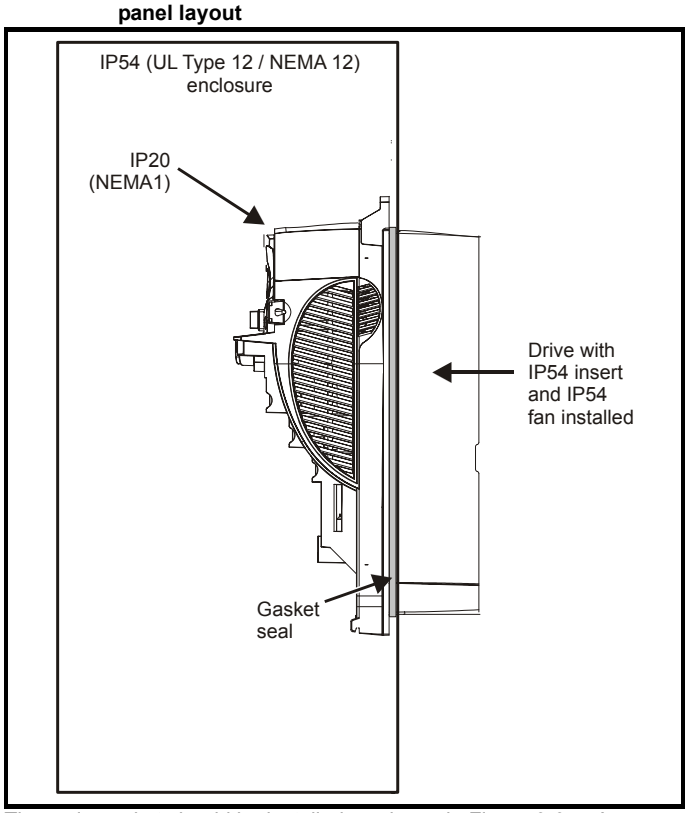

The main gasket should be installed as shown in Figure 3-34. Any screws / bolts that are used for mounting should be installed with the nylon washers provided in the kit box to maintain a seal around the screw hole. See Figure 3-37.

In order to achieve the high IP rating at the rear of the heatsink with size 1 and 2, it is necessary to seal a heatsink vent by installing the IP54 insert as shown in Figure 3-35 and Figure 3-36.

Figure 3-34 Installing the gasket

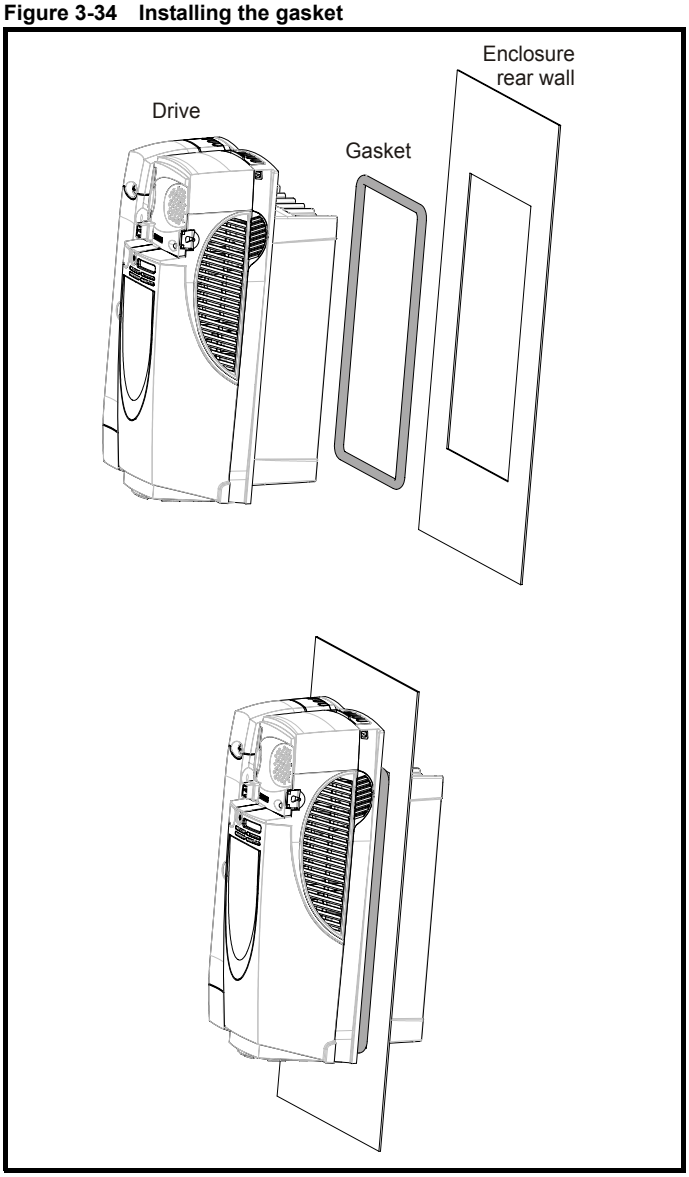

Figure 3-35 Installation of IP54 insert for size 1

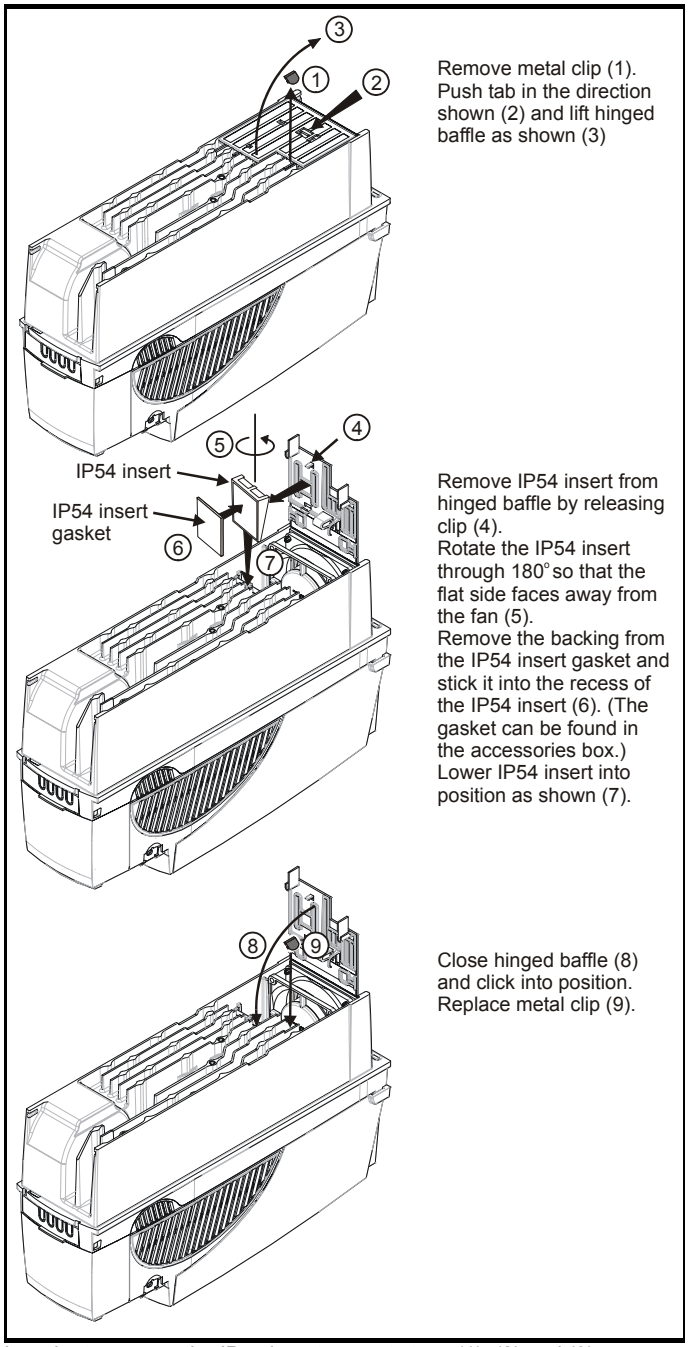

In order to remove the IP54 insert, repeat steps (1), (2) and (3), reverse steps (7), (6), (5) and (4) and repeat steps (8) and (9).

Figure 3-36 Installation of IP54 insert for size 2

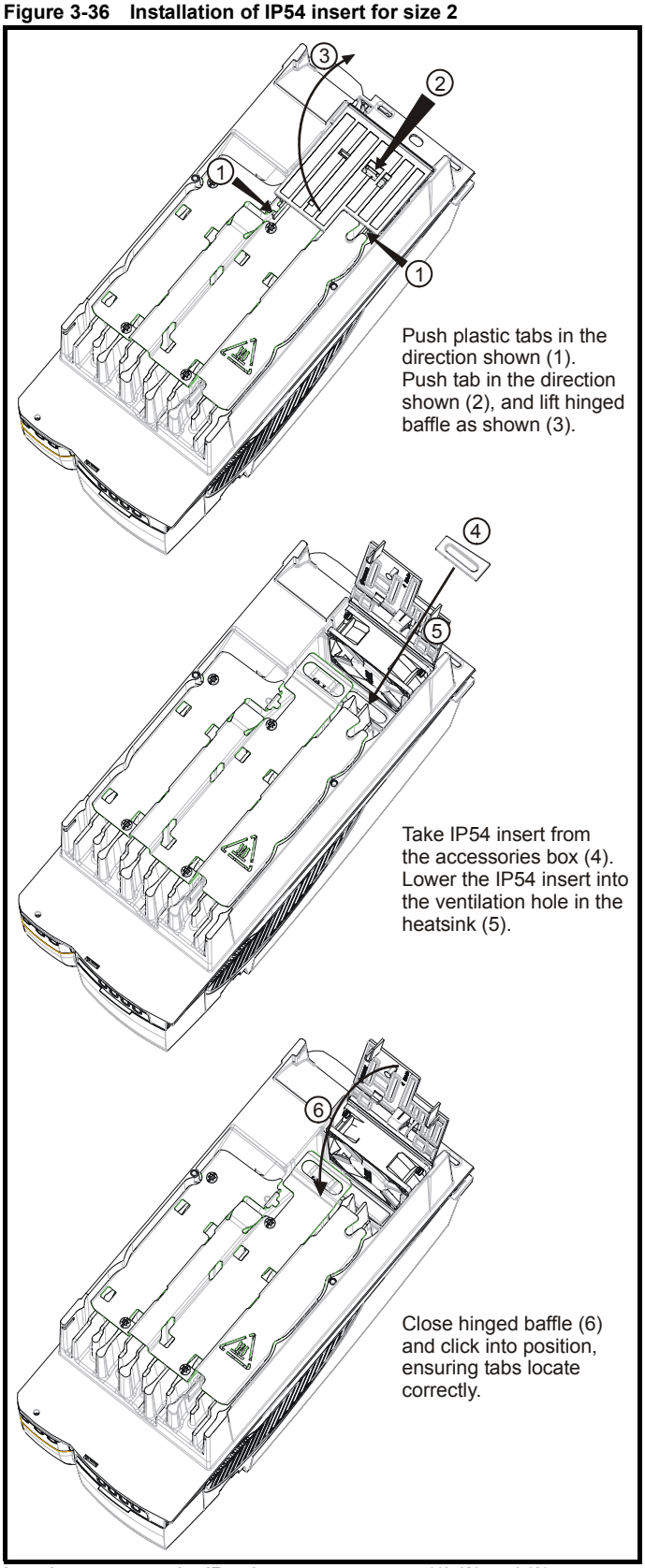

In order to remove the IP54 insert, repeat steps (1) (2) and (3), reverse steps (5) and (4) and repeat step (6).

For sizes 4 to 6 it may be necessary to improve the rigidity of the through panel mounting surface due to the larger distance between the top and bottom mounting brackets and the need to maintain compression on the gasket.

When the drive is mounted, if the gap between the drive flange (which the gasket rests on) and the rear wall of the enclosure is ≥6mm at any point around the drive then the following methods can be used to compress the gasket further:

1. Use a thicker panel for the mounting wall of the enclosure through which the drive is mounted.
2. Use an internal backplate to pull the rear wall of the enclosure up to the drive gasket. See Figure 3-37 for details. (Nylon washers are supplied in the standard drive kit for sealing off any nut and bolt fixings that exit through the rear wall of the panel).
3. If an internal backplate is not available a separate clamp can be used to simulate option 2. See Figure 3-38. 4 off sealing clamps are supplied in the drive kit box.

Figure 3-37 Option 2 for achieving IP54 (UL type 12 / NEMA 12) through-panel mounting

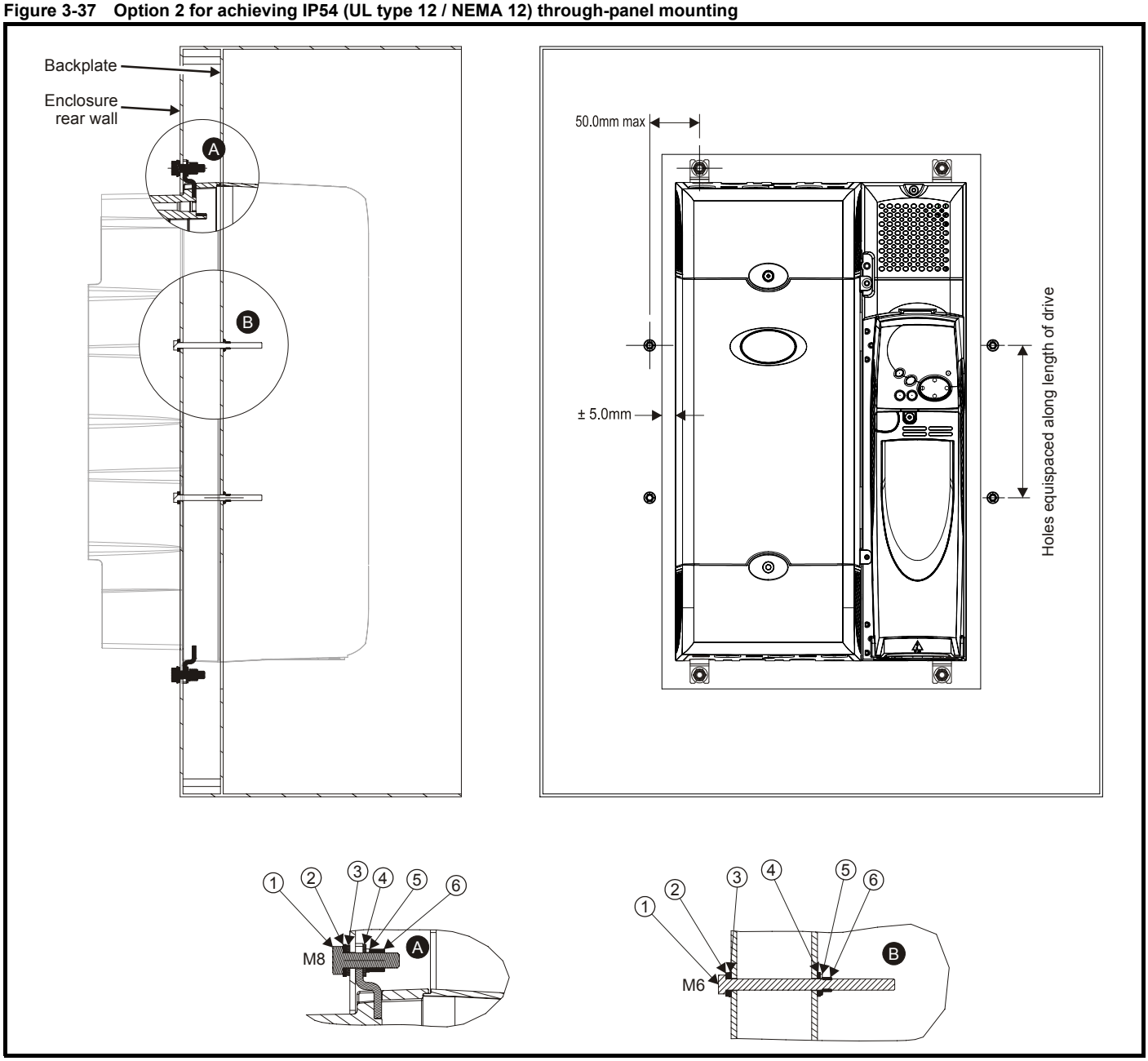

Table 3-4 Description of fixings

Item	Description
1	Bolt
2	Flat washer
3	Nylon washer (from kitbox)
4	Flat washer
5	Spring washer
6	Nut

Table 3-5 Quantity of nylon washers included in the kit boxes

Size	Quantity in M8 kitbox (A)	Quantity in M6 kitbox (B)
1	0	3
2	0	3
3	0	4
4	4	4
5	4	4
6	4	4

Figure 3-38 Option 3 for achieving IP54 (UL Type 12 / NEMA 12) through panel mounting

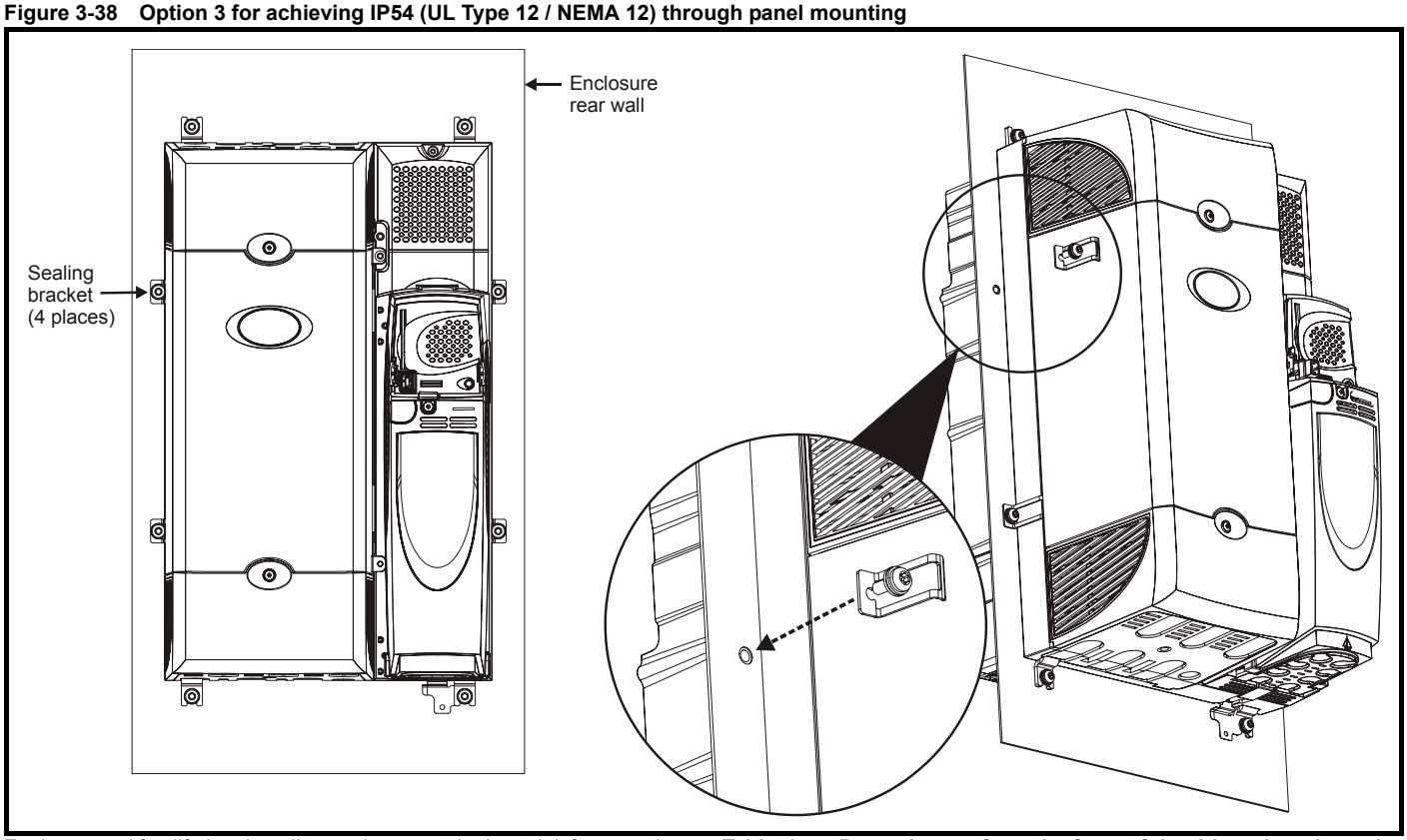

For increased fan lifetime in a dirty environment the heatsink fan must be replaced with an IP54 rated fan. Contact the supplier of the drive for details. If the standard fan is used in a dirty/dusty environment, reduced fan lifetime will result. Regular cleaning of the fan and heatsink is recommended in this environment. The heatsink fan installed in sizes 5 and 6 are IP54 rated as standard.

The guidelines in Table 3-6 should be followed.

Table 3-6 Environment considerations

Environment	IP54 Insert	Fan	Comments
Clean	Not installed	Standard	
Dry, dusty (non-conductive)	Installed	Standard	Regular cleaning recommended. Fan lifetime may be reduced.
Dry, dusty (conductive)	Installed	Standard / IP54	Regular cleaning recommended. Fan lifetime may be reduced.
IP54 compliance	Installed	IP54	Regular cleaning recommended.

NOTE

A current derating must be applied to the size 1 and 2 if the IP54 insert and/or IP54 rated fan are installed. Derating information is provided in section 13.1.1 *Power and current ratings (Derating for switching frequency and temperature)* on page 219.

Failure to do so may result in nuisance tripping.

NOTE

When designing an IP54 (NEMA 12) enclosure (Figure 3-33), consideration should be made to the dissipation from the front of the drive.

Table 3-7 Power losses from the front of the drive when through-panel mounted

Frame size	Power loss
1	≤50W
2	≤75W
3	≤100W
4	≤204W
5	≤347W
6	≤480W

3.9 External EMC filter for standard drives

In order to provide our customers with a degree of flexibility, external EMC filters have been sourced from two manufacturers: Schaffner & Epcos. Filter details for each drive rating are provided in the tables below. Both the Schaffner and Epcos filters meet the same specifications.

Table 3-8 Drive EMC filter details (size 1 to 6)

Drive	Schaffner		Epcos	
	CT part no.	Weight	CT part no.	Weight
BA1201 to BA1204	4200-6118	1.4 kg (3.1 lb)	4200-6121	2.1 kg (4.6 lb)
	4200-6119		4200-6120	
BA1401 to BA1404	4200-6118	1.4 kg (3.1 lb)	4200-6121	2.1 kg (4.6 lb)
BA1405 to BA1406	4200-6119		4200-6120	
BA2201 to BA2203	4200-6210	2.0 kg (4.4 lb)	4200-6211	3.3 kg (7.3 lb)
BA2401 to BA2403	4200-6210	2.0 kg (4.4 lb)	4200-6211	3.3 kg (7.3 lb)
BA3201 to BA3202	4200-6307	3.5 kg (7.7 lb)	4200-6306	5.1 kg (11.2 lb)
BA4201 to BA4203	4200-6406	4.0 kg (8.8 lb)	4200-6405	7.8 kg (17.2 lb)
BA3401 to BA3403	4200-6305	3.5 kg (7.7 lb)	4200-6306	5.1 kg (11.2 lb)
BA3501 to BA3507	4200-6309		4200-6308	
BA4401 to BA4403	4200-6406	4.0 kg (8.8 lb)	4200-6405	7.8 kg (17.2 lb)
BA4601 to BA4606	4200-6408	3.8 kg (8.4 lb)	4200-6407	8.0 kg (17.6 lb)
BA5401 to BA5402	4200-6503	6.8 kg (15.0 lb)	4200-6501	12.0 kg (26.5 lb)
BA5601 to BA5602	4200-6504	4.4 kg (9.7 lb)	4200-6502	10.0 kg (22.0 lb)
BA6401 to BA6402	4200-6603	5.25 kg (11.6 lb)	4200-6601	8.6 kg (19.0 lb)
BA6601 to BA6602	4200-6604		4200-6602	

The external EMC filters for sizes 1 to 3 can be footprint or bookcase mounted, see Figure 3-39 and Figure 3-40. The external EMC filters for sizes 4 to 6 are designed to be mounted above the drive, as shown in Figure 3-41.

Mount the external EMC filter following the guidelines in section 4.10.5 *Compliance with generic emission standards* on page 68.

Figure 3-39 Footprint mounting the EMC filter

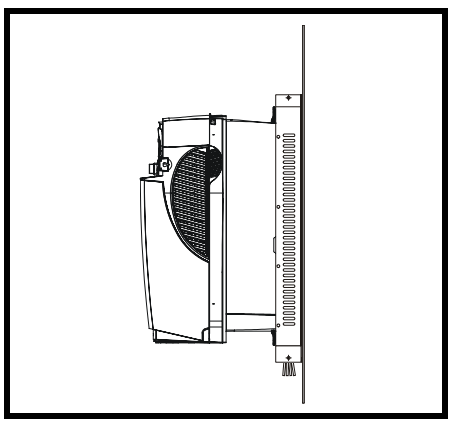

Figure 3-40 Bookcase mounting the EMC filter

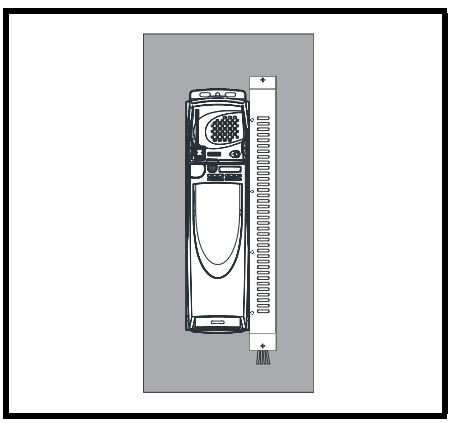

Figure 3-41 Size 4 to 6 mounting of EMC filter

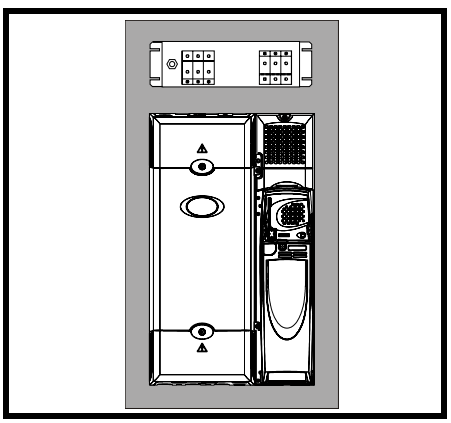

Figure 3-42 Size 1 external EMC filter

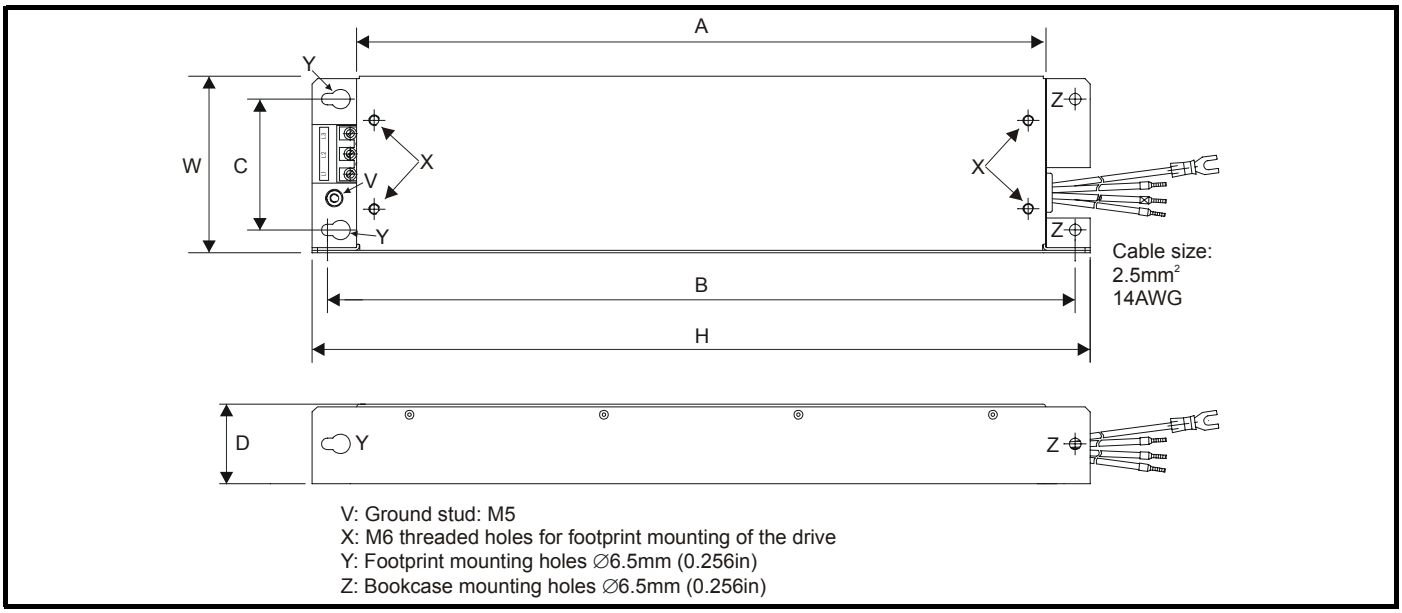

V: Ground stud: M5
X: M6 threaded holes for footprint mounting of the drive
Y: Footprint mounting holes ∅6.5mm (0.256in)
Z: Bookcase mounting holes ∅6.5mm (0.256in)

All filter mounting holes are suitable for M6 fasteners.

CT part no.	Manufacturer	A	B	C	D	H	W
4200-6118	Schaffner	390 mm (15.354 in)	423 mm (16.654 in)	74 mm (2.913 in)	45 mm (1.772 in)	440 mm (17.323 in)	100 mm (3.937 in)
4200-6119							
4200-6121	Epcos					450 mm (17.717 in)	
4200-6120							

Figure 3-43 Size 2 external EMC filter

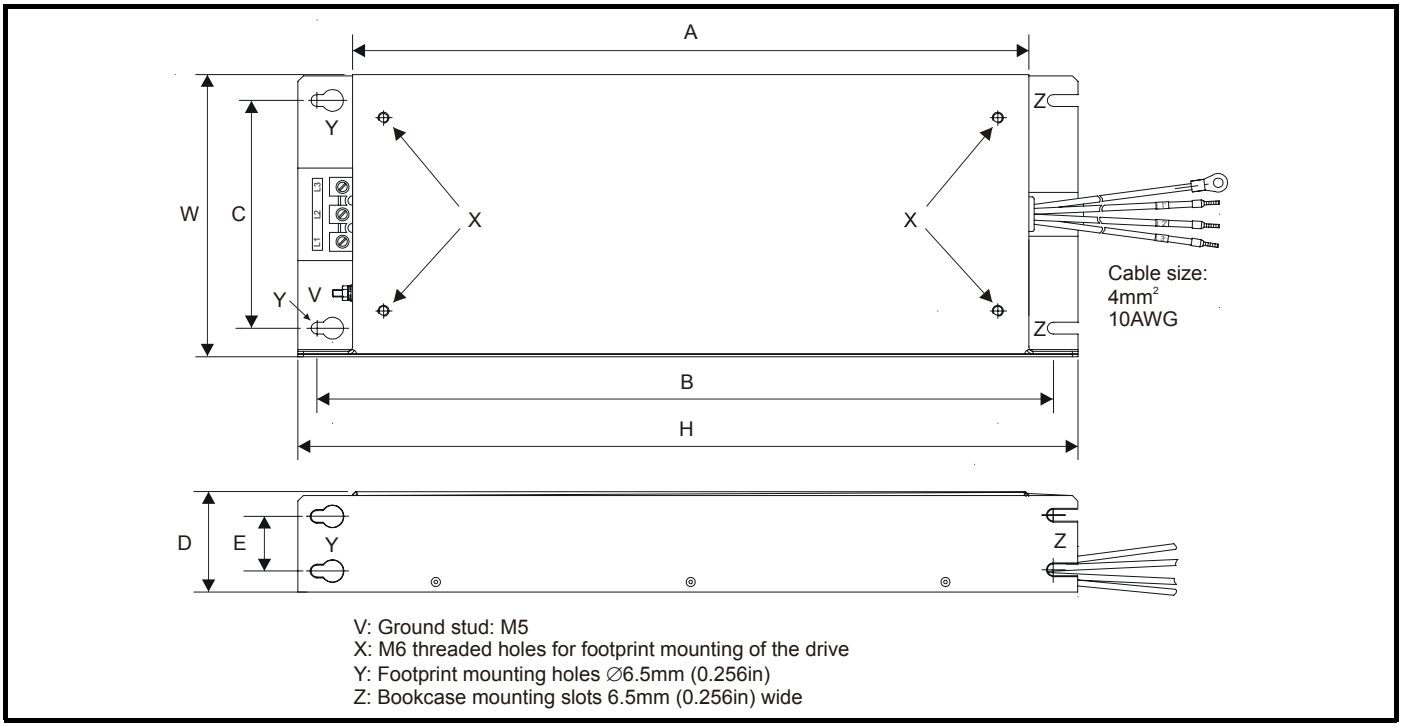

V: Ground stud: M5
X: M6 threaded holes for footprint mounting of the drive
Y: Footprint mounting holes ∅6.5mm (0.256in)
Z: Bookcase mounting slots 6.5mm (0.256in) wide

All filter mounting holes are suitable for M6 fasteners.

CT part no.	Manufacturer	A	B	C	D	E	H	W
4200-6210	Schaffner	371.5 mm (14.626 in)	404.5 mm (15.925 in)	125 mm (4.921 in)	55 mm (2.165 in)	30 mm (1.181 in)	428.5 mm (16.870 in)	155 mm (6.102 in)
4200-6211	Epcos						431.5 mm (16.988 in)	

Figure 3-44 Size 3 external EMC filter

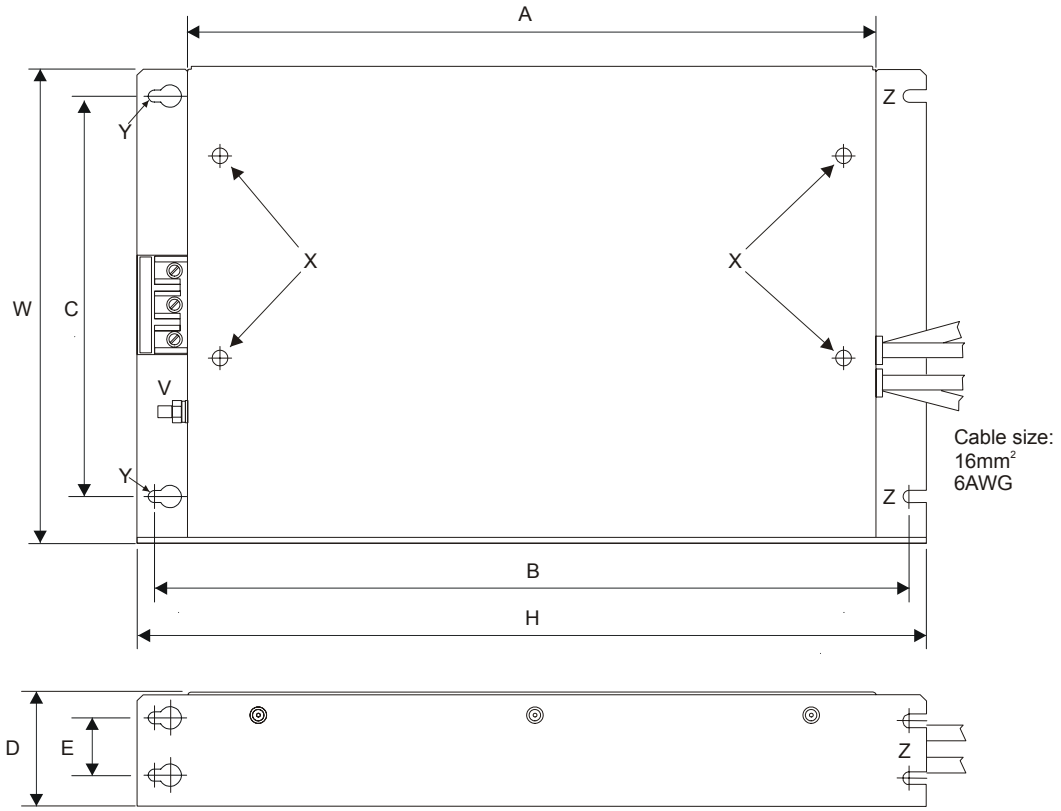

CT part no.	Manufacturer	A	B	C	D	E	H	W
4200-6305	Schaffner	361 mm (14.213 in)	396 mm (15.591 in)	210 mm (8.268 in)	60 mm (2.362 in)	30 mm (1.181 in)	414 mm (16.299 in)	250 mm (9.843 in)
4200-6307								
4200-6309								
4200-6306	Epcos	365 mm (14.370 in)					425 mm (16.732 in)	
4200-6308								

Figure 3-45 Size 4 and 5 external EMC filter

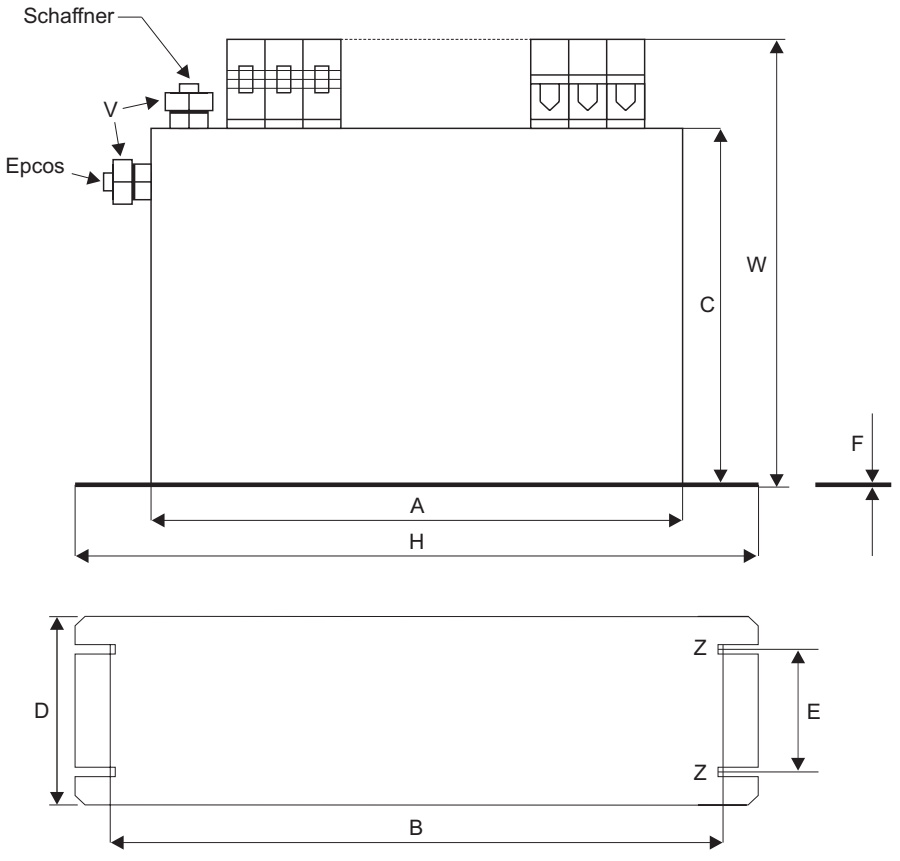

V: Ground stud: M10
Z: Bookcase mounting slots 6.5mm (0.256in wide)

CT part no.	Manufacturer	A	B	C	D	E	F	H	W
4200-6406	Schaffner	260 mm (10.236 in)	275 mm (10.827 in)	170 mm (6.693 in)	100 mm (3.937 in)	65 mm (2.559 in)	1.5 mm (0.059in)	300 mm (11.811 in)	225 mm (8.858 in)
4200-6408									208 mm (8.189 in)
4200-6503					120 mm (4.724 in)	85 mm (3.346 in)			249 mm (9.803 in)
4200-6504					100 mm (3.937 in)	65 mm (2.559 in)			225 mm (8.858 in)
4200-6405	Epcos			150 mm (5.906 in)	90 mm (3.543in)	65 mm (2.559 in)	2 mm (0.079 in)		207 mm (8.150 in)
4200-6407									205 mm (8.071 in)
4200-6501				170 mm (6.693 in)	120 mm (4.724 in)	85 mm (3.346 in)	1 mm (0.039 in)		249 mm (9.803 in)
4200-6502									

Figure 3-46 Size 6 external EMC filter

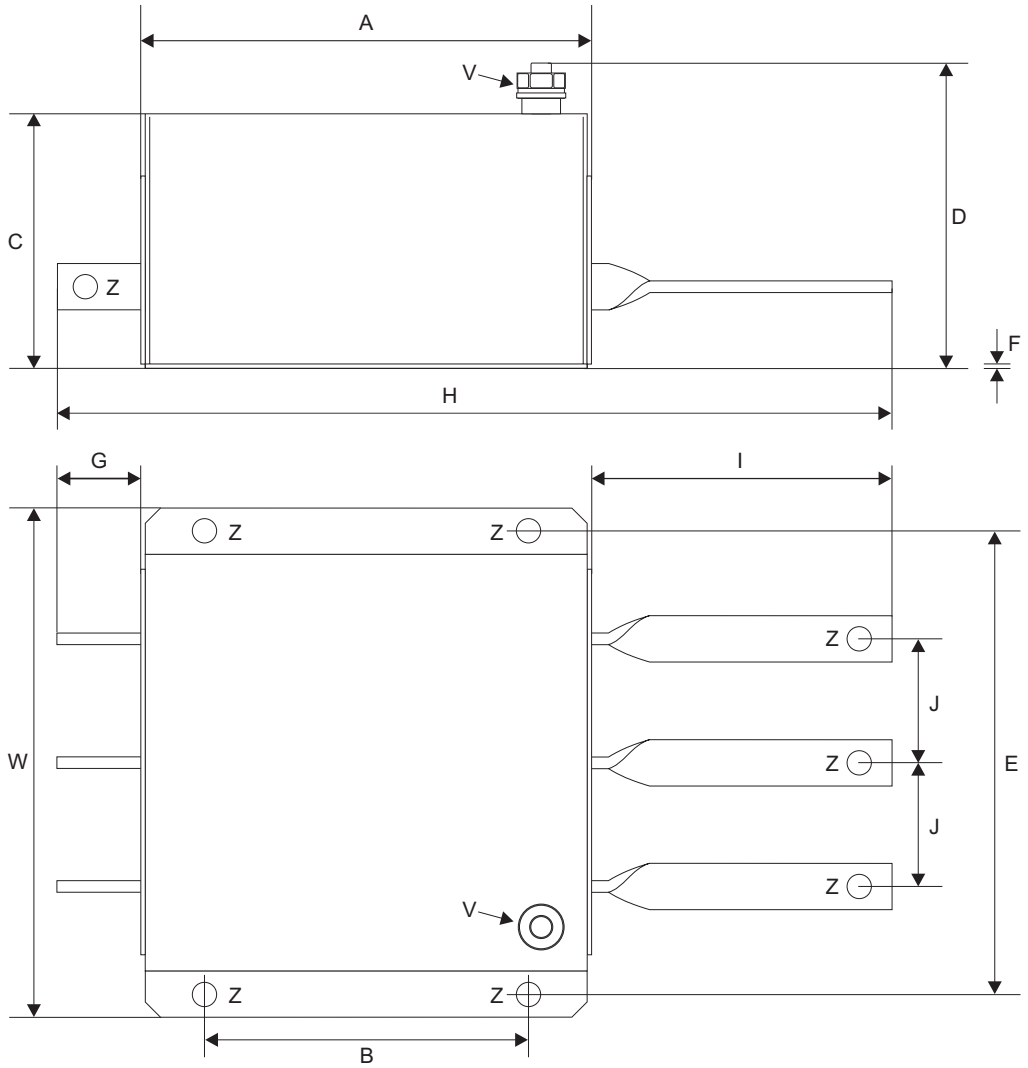

V: Ground stud: M10
Z: Hole size: ∅10.5mm

CT part no.	Manufacturer	A	B	C	D	E	F	G	H	I	J	W
4200-6603	Schaffner	191 mm (7.717 in)	140 mm (5.512 in)	110 mm (4.331 in)	136 mm (5.354 in)	210 mm (8.268 in)	2 mm (0.079in)	38 mm (1.496 in)	295 mm (11.614 in)	66 mm (2.958 in)	53.5 mm (2.106 in)	230 mm (9.055 in)
4200-6604									357 mm (14.055 in)	128 mm (5.039 in)		
4200-6601	Epcos	200 mm (7.874 in)		108 mm (4.252 in)	147 mm (5.787 in)			36.5 mm (1.437 in)	364 mm (14.331 in)	127 mm (5.000 in)		
4200-6602												

3.10 Electrical terminals

3.10.1 Terminal sizes and torque settings



To avoid a fire hazard and maintain validity of the UL listing, adhere to the specified tightening torques for the power and ground terminals. Refer to the following tables.

Table 3-9 Drive control and relay terminal data

Model	Connection type	Torque setting
All	Plug-in terminal block	0.5 N m (0.4 lb ft)

Table 3-10 Wall mounted drive power terminal data

Model size	AC terminals		High current DC and braking		Ground terminal	
	Term.	Max torque	Term.	Max torque	Term.	Max torque
1	Plug-in terminal block	1.5 N m (1.1 lb ft)	Terminal block (M4 screws)	1.5 N m (1.1 lb ft)	M5 stud	4.0 N m (1.9 lb ft)
2	Plug-in terminal block	1.5 N m (1.1 lb ft)	Terminal block (M5 screws)	1.5 N m (1.1 lb ft)	M5 stud	4.0 N m (1.9 lb ft)
3	Terminal block (M6 screws)	2.5 N m (1.8 lb ft)	Terminal block (M6 screws)	2.5 N m (1.8 lb ft)	M* stud	4.0 N m (1.9 lb ft)
4	M10 stud	15 N m (11.1 lb ft)	M10 stud	15 N m (11.1 lb ft)	M10 stud	12.0 N m (8.8 lb ft)
5	M10 stud	15 N m (11.1 lb ft)	M10 stud	15 N m (11.1 lb ft)	M10 stud	4.0 N m (1.9 lb ft)
6	M10 stud	15 N m (11.1 lb ft)	M10 stud	15 N m (11.1 lb ft)	M10 stud	4.0 N m (1.9 lb ft)

Table 3-11 Plug-in terminal block maximum cable sizes

Model size	Terminal block description	Max cable size
All	11 way control connectors	1.5 mm^2 (16 AWG)
All	2 way relay connector	2.5 mm^2 (12 AWG)
1 and 2	6 way AC power connector	8 mm^2 (8 AWG)
4, 5 and 6	Low Voltage DC Enable connector	1.5 mm^2 (16 AWG)
6	Heatsink fan supply connector	1.5 mm^2 (16 AWG)
All	BAN connector	1.5 mm^2 (16 AWG)

Table 3-12 Schaffner external EMC filter terminal data

CT part number	Power connections		Ground connections	
	Max cable size	Max torque	Ground stud size	Max torque
4200-6118	4mm^2 12AWG	0.8 N m (0.6 lb ft)	M5	3.5 N m (2.6 lb ft)
4200-6119				
4200-6210	10mm^2 8AWG	2 N m (1.5 lb ft)	M5	3.5 N m (2.6 lb ft)
4200-6305	16mm^2 6AWG	2.2 N m (1.6 lb ft)	M6	3.9 N m (2.9 lb ft)
4200-6307				
4200-6309				
4200-6406	50mm^2 0AWG	8 N m (5.9 lb ft)	M10	25 N m (18.4 lb ft)
4200-6408	25mm^2 4AWG	2.3 N m (1.7 lb ft)	M6	3.9 N m (2.9 lb ft)
4200-6503	95mm^2 4/0AWG	20 N m (14.7 lb ft)	M10	25 N m (18.4 lb ft)
4200-6504	50mm^2 0AWG	8 N m (5.9 lb ft)	M10	25 N m (18.4 lb ft)
4200-6603			M10	25 N m (18.4 lb ft)
4200-6604				

Table 3-13 Epcos external EMC Filter terminal data

CT part number	Power connections		Ground connections	
	Max cable size	Max torque	Ground stud size	Max torque
4200-6120	4mm^2 12AWG	0.6 N m (0.4 lb ft)	M5	3.0 N m (2.2 lb ft)
4200-6121				
4200-6211	10mm^2 8AWG	1.35 N m (1.0 lb ft)	M5	3.0 N m (2.2 lb ft)
4200-6306	16mm^2 6AWG	2.2 N m (1.6 lb ft)	M6	5.1 N m (3.8 lb ft)
4200-6308	10mm^2 8AWG	1.35 N m (1.0 lb ft)		
4200-6405	50mm^2 0AWG	6.8 N m (5.0 lb ft)	M10	10 N m (7.4 lb ft)
4200-6407				
4200-6501	95mm^2 4/0AWG	20 N m (14.7 lb ft)		
4200-6502				
4200-6601				
4200-6602				

3.11 Routine maintenance

The standard drive should be installed in a cool, clean, well ventilated location. Contact of moisture and dust with the drive should be prevented.

The E12/E54 drive is protected from airborne dust and splashing water.

Regular checks of the following should be carried out to ensure drive / installation reliability are maximised:

Environment	
Ambient temperature	Ensure the standard enclosure temperature remains at or below maximum specified
Dust	Ensure the standard drive remains dust free – check that the heatsink and drive fan are not gathering dust. The lifetime of the fan is reduced in dusty environments.
Moisture	Ensure the drive enclosure shows no signs of condensation
Enclosure	
Enclosure door filters	Ensure filters are not blocked and that air is free to flow
E12/E54 drive cover filters (size 4 to 6 only)	Replace filters regularly, at least every 3 months. In some environments a filter change may be required more frequently
E12/E54 drive cover	Ensure that all seals are correctly located and not damaged
Electrical	
Screw connections	Ensure all screw terminals remain tight
Crimp terminals	Ensure all crimp terminals remains tight – check for any discolouration which could indicate overheating
Cables	Check all cables for signs of damage

4 Electrical Installation

Many cable management features have been incorporated into the product and accessories, this chapter shows how to optimise them. Key features include:

- Internal EMC filter
- EMC compliance with shielding / grounding accessories
- Product rating, fusing and cabling information
- Brake resistor details (selection / ratings)

WARNING

Electric shock risk

The voltages present in the following locations can cause severe electric shock and may be lethal:

- AC supply cables and connections
- DC and brake cables, and connections
- Output cables and connections
- Many internal parts of the drive, and external option units

Unless otherwise indicated, control terminals are single insulated and must not be touched.

WARNING

Isolation device

The AC supply must be disconnected from the drive using an approved isolation device before any cover is removed from the drive or before any servicing work is performed.

WARNING

STOP function

The STOP function does not remove dangerous voltages from the drive, the motor or any external option units.

WARNING

Stored charge

The drive contains capacitors that remain charged to a potentially lethal voltage after the AC supply has been disconnected. If the drive has been energized, the AC supply must be isolated at least ten minutes before work may continue.

Normally, the capacitors are discharged by an internal resistor. Under certain, unusual fault conditions, it is possible that the capacitors may fail to discharge, or be prevented from being discharged by a voltage applied to the output terminals. If the drive has failed in a manner that causes the display to go blank immediately, it is possible the capacitors will not be discharged. In this case, consult Control Techniques or their authorised distributor.

4.1 Power connections

4.1.1 AC and DC connections

Figure 4-1 Size 1 power connections

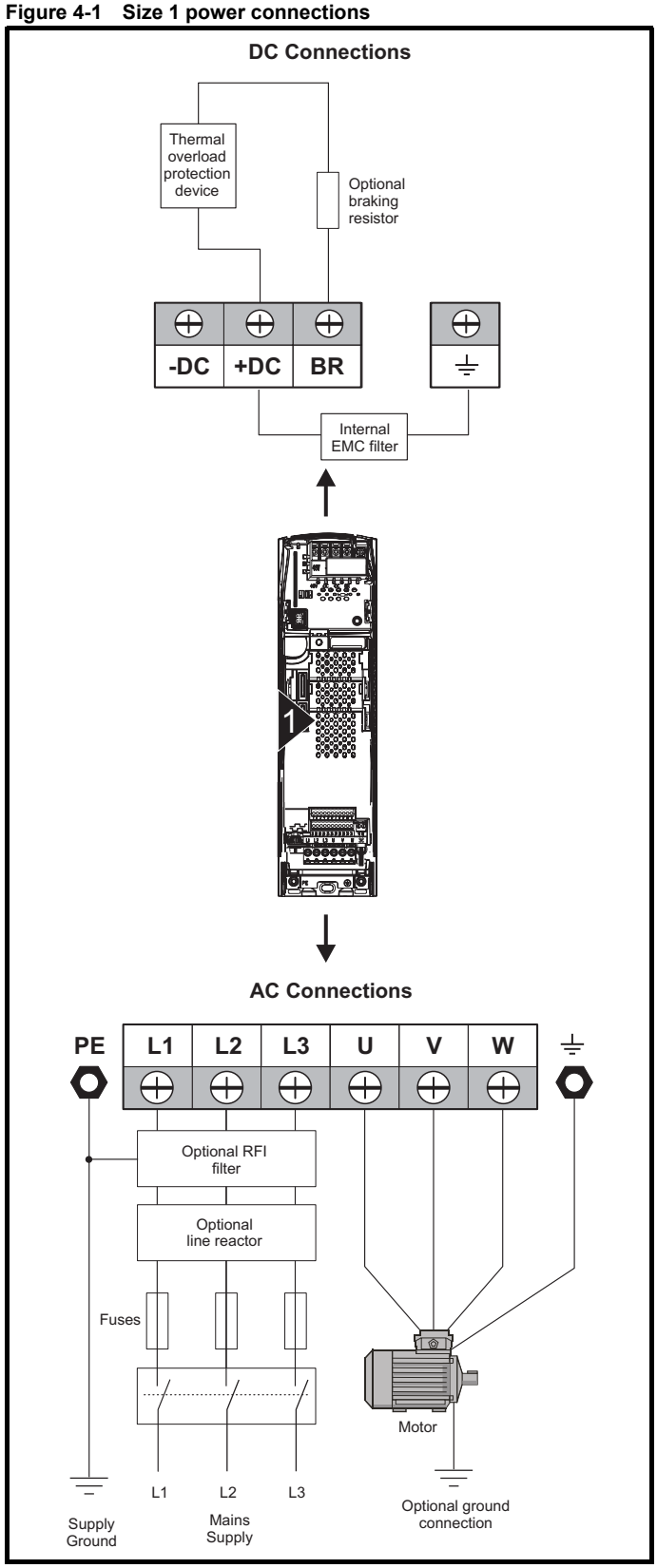

Figure 4-2 Size 2 power connections

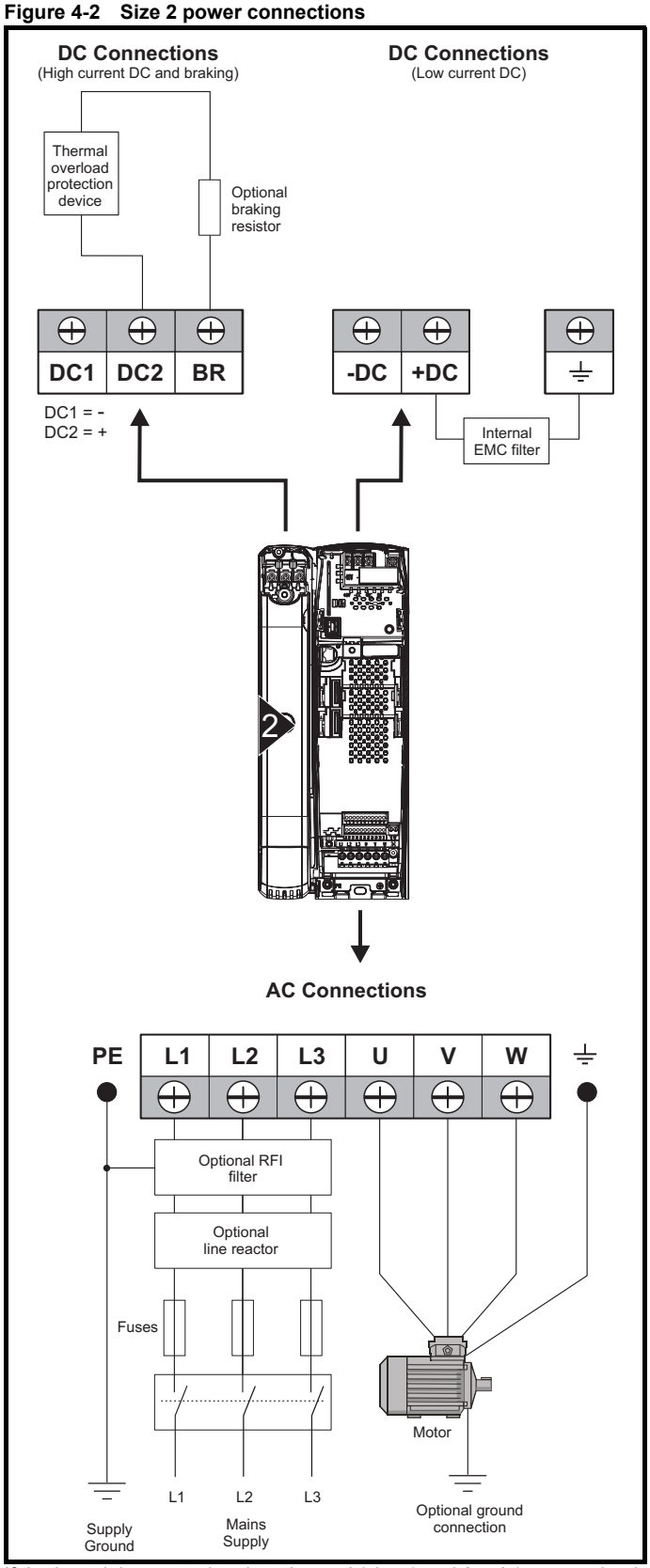

If the heatsink mounted resistor is used (size 1 and 2 only), an overload protection device is not required. The resistor is designed to fail safely under fault conditions.

See Figure 4-5 for further information on ground connections.

Figure 4-3 Size 3 power connections

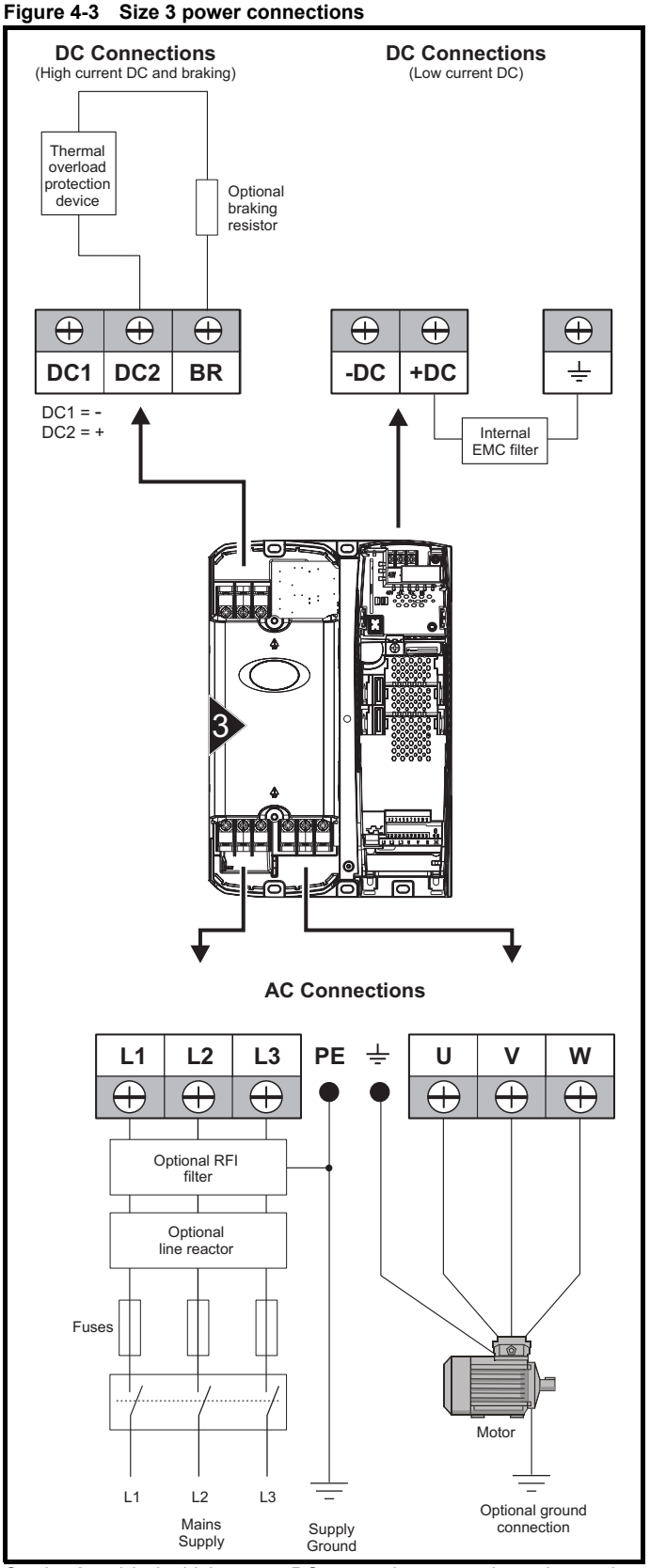

On size 2 and 3, the high current DC connections must always be used when using a braking resistor, supplying the drive from DC (low voltage DC or high voltage DC) or using the drive in a parallel DC bus system. The low current DC connection is used to connect low voltage DC to the drive internal power supply and to connect the internal EMC filter.

See Figure 4-6 for further information on ground connections.

Figure 4-4 Size 4, 5 and 6 power connections

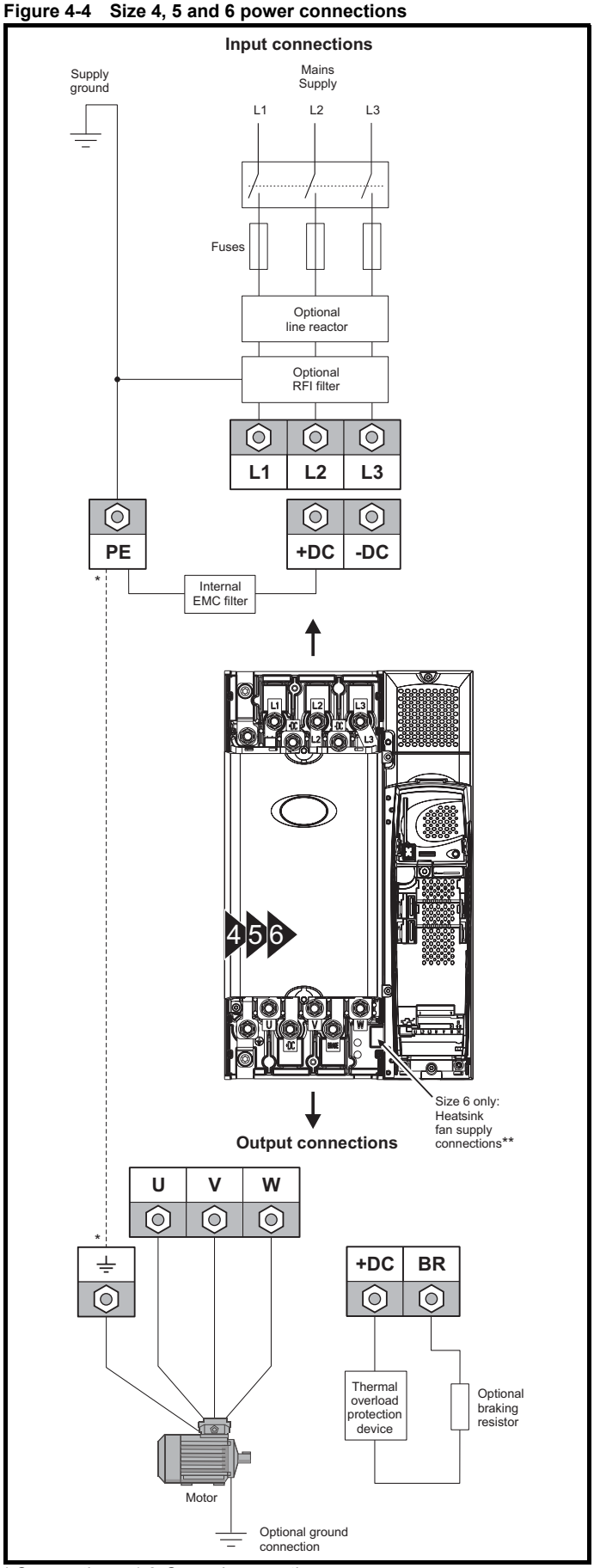

* See section 4.1.2 *Ground connections* .

** See section 4.4 *Fan connections* on page 55 for more information.

4.1.2 Ground connections

Size 1

On a size 1, the supply and motor ground connections are made using the studs located either side of the drive near the plug-in power connector. Refer to Figure 4-1 on page 51.

Size 2

On a size 2, the supply and motor ground connections are made using the grounding bridge that locates at the bottom of the drive. See Figure 4-5 for details.

Size 3

On a size 3, the supply and motor ground connections are made using an M6 nut and bolt that locates in the fork protruding from the heatsink between the AC supply and motor output terminals. See Figure 4-6 for details.

Size 4, 5 and 6

On a size 4, 5 and 6, the supply and motor ground connections are made using an M10 bolt at the top (supply) and bottom (motor) of the drive. See Figure 4-7 on page 54.

The supply ground and motor ground connections to the drive are connected internally by a copper conductor with a cross-sectional area given below:

Size 4: 19.2mm^2 (0.03in^2, or slightly bigger than 6 AWG)

Size 5: 60mm^2 (0.09in^2, or slightly bigger than 1 AWG)

Size 6: 75mm^2 (0.12in^2, or slightly bigger than 2/0 AWG)

This connection is sufficient to provide the ground (equipotential bonding) connection for the motor circuit under the following conditions:

To standard	Conditions
IEC 60204-1 & EN 60204-1	Supply phase conductors having cross-sectional area not exceeding: Size 4: 38.4mm^2 Size 5: 120mm^2 Size 6: 150mm^2
NFPA 79	Supply protection device rating not exceeding: Size 4: 200A Size 5: 600A Size 6: 1000A

If the necessary conditions are not met, an additional ground connection must be provided to link the motor circuit ground and the supply ground.

Figure 4-5 Size 2 ground connections

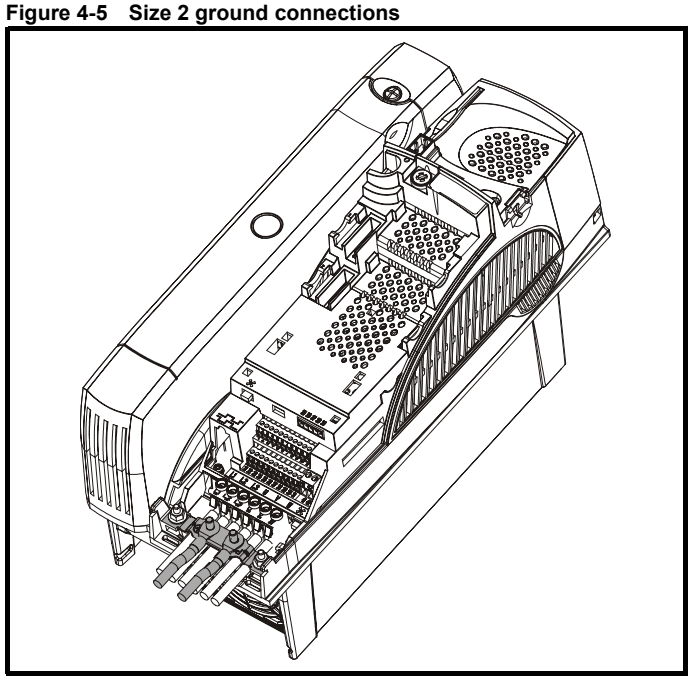

Figure 4-6 Size 3 ground connections

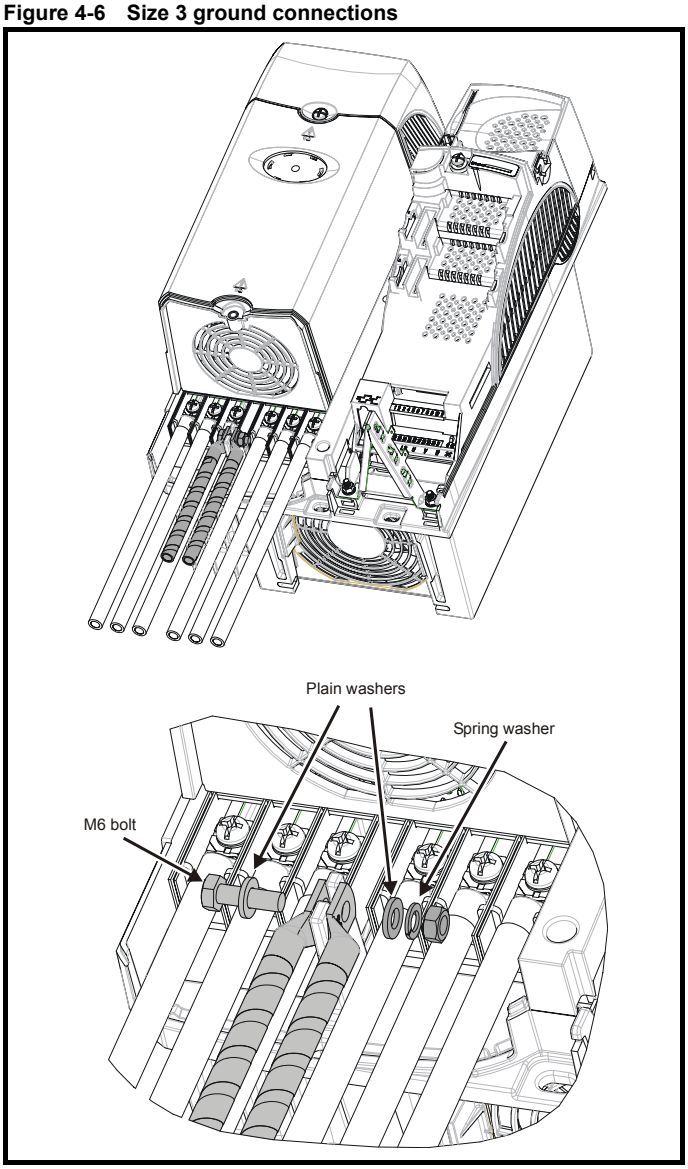

Figure 4-7 Size 4, 5 and 6 ground connections

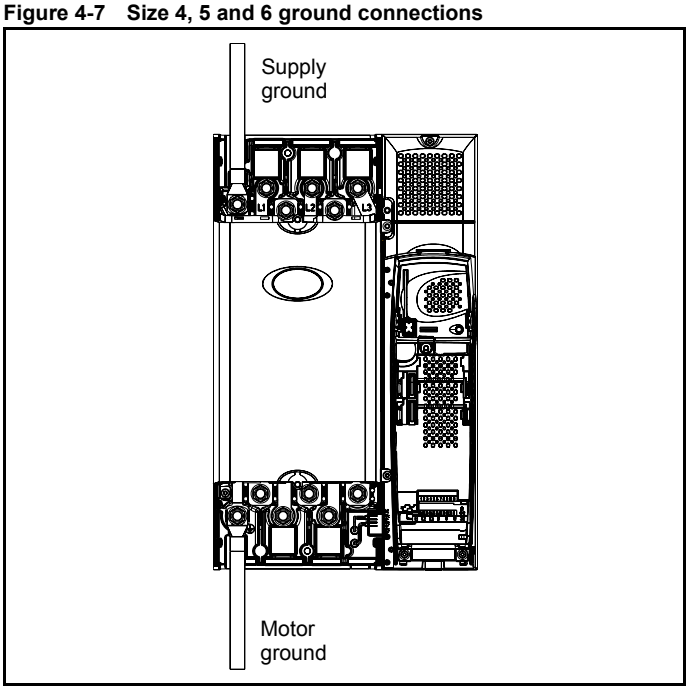

WARNING

The ground loop impedance must conform to the requirements of local safety regulations.

The drive must be grounded by a connection capable of carrying the prospective fault current until the protective device (fuse, etc.) disconnects the AC supply.

The ground connections must be inspected and tested at appropriate intervals.

4.2 AC supply requirements

Voltage:

BAx2xx	200V to 240V ±10%
BAx4xx	380V to 480V ±10%
BAx5xx	500V to 575V ±10%
BAx6xx	500V to 690V ±10%

Number of phases: 3

Maximum supply imbalance: 2% negative phase sequence (equivalent to 3% voltage imbalance between phases).

Frequency range: 48 to 65 Hz

For UL compliance only, the maximum supply symmetrical fault current must be limited to 100kA

4.2.1 Supply types

Drives rated for supply voltage up to 575V are suitable for use with any supply type, i.e. TN-S, TN-C-S, TT, IT, with grounding at any potential, i.e. neutral, centre or corner ("grounded-delta").

Grounded delta supplies >575V are not permitted.

Drives are suitable for use on supplies of installation category III and lower, according to IEC60664-1. This means they may be connected permanently to the supply at its origin in a building, but for outdoor installation additional over-voltage suppression (transient voltage surge suppression) must be provided to reduce category IV to category III.

WARNING

Operation with IT (ungrounded) supplies:
Special attention is required when using internal or external EMC filters with ungrounded supplies, because in the event of a ground (earth) fault in the motor circuit the drive may not trip and the filter could be over-stressed. In this case, either the filter must not be used (removed) or additional independent motor ground fault protection must be provided. Refer to Table 4-1.
For instructions on removal, refer to Figure 4-19 *Removal of internal EMC filter (size 1 to 3)* and Figure 4-20 *Removal of internal EMC filter (sizes 4 to 6)* on page 65.
For details of ground fault protection contact the supplier of the drive.

A ground fault in the supply has no effect in any case. If the motor must continue to run with a ground fault in its own circuit then an input isolating transformer must be provided and if an EMC filter is required it must be located in the primary circuit.

Unusual hazards can occur on ungrounded supplies with more than one source, for example on ships. Contact the supplier of the drive for more information.

Table 4-1 Behaviour of the drive in the event of a motor circuit ground (earth) fault with an IT supply

Drive size	Internal filter only	External filter (with internal)
1 & 2	Drive trips on fault	Drive trips on fault
3	May not trip – precautions required	Drive trips on fault
4 to 6	May not trip – precautions required	May not trip – precautions required

4.2.2 Supplies requiring line reactors

Input line reactors reduce the risk of damage to the drive resulting from poor phase balance or severe disturbances on the supply network.

Where line reactors are to be used, reactance values of approximately 2% are recommended. Higher values may be used if necessary, but may result in a loss of drive output (reduced torque at high speed) because of the voltage drop.

For all drive ratings, 2% line reactors permit drives to be used with a supply unbalance of up to 3.5% negative phase sequence (equivalent to 5% voltage imbalance between phases).

Severe disturbances may be caused by the following factors, for example:

- Power factor correction equipment connected close to the drive.
- Large DC drives having no or inadequate line reactors connected to the supply.
- Across the line (DOL) started motor(s) connected to the supply such that when any of these motors are started, the voltage dip exceeds 20%.

Such disturbances may cause excessive peak currents to flow in the input power circuit of the drive. This may cause nuisance tripping, or in extreme cases, failure of the drive.

Drives of low power rating may also be susceptible to disturbance when connected to supplies with a high rated capacity.

Line reactors are particularly recommended for use with the following drive models when one of the above factors exists, or when the supply capacity exceeds 175kVA:

BA1201 BA1202 BA1203 BA1204
BA1401 BA1402 BA1403 BA1404

Model sizes BA1405 to BA4606 have an internal DC choke and BA5201 to BA6602 have internal AC line chokes, so they do not require AC line reactors except for cases of excessive phase unbalance or extreme supply conditions.

When required, each drive must have its own reactor(s). Three individual reactors or a single three-phase reactor should be used.

Reactor current ratings

The current rating of the line reactors should be as follows:

Continuous current rating:
Not less than the continuous input current rating of the drive

Repetitive peak current rating:
Not less than twice the continuous input current rating of the drive

4.2.3 Input inductor calculation.

To calculate the inductance required (at **Y**%), use the following equation:

$$\mathbf{L} = \frac{\mathbf{Y}}{\mathbf{100}} \times \frac{\mathbf{V}}{\sqrt{\mathbf{3}}} \times \frac{\mathbf{1}}{\mathbf{2\pi fI}}$$

Where:
I = drive rated input current (A)
L = inductance (H)
f = supply frequency (Hz)
V = voltage between lines

4.3 Supplying the drive with DC / DC bus paralleling

The connecting of the DC bus between several drives is typically used to:

1. Return energy from a drive which is being overhauled by the load to a second motoring drive.
2. Allow the use of one braking resistor to dissipate regenerative energy from several drives.

There are limitations to the combinations of drives which can be used in this configuration.

For application data, contact the supplier of the drive.

4.4 Fan connections

4.4.1 Heatsink fan supply

The heatsink fan on size 1 to 5 is supplied internally by the drive. The heatsink fan on size 6 requires an external 24Vdc supply. The connections for the heatsink fan supply must be made to the upper terminal connector near to the W phase output on the drive. Figure 4-8 shows the position of the heatsink fan supply connections.

Figure 4-8 Location of the size 6 heatsink fan supply connections

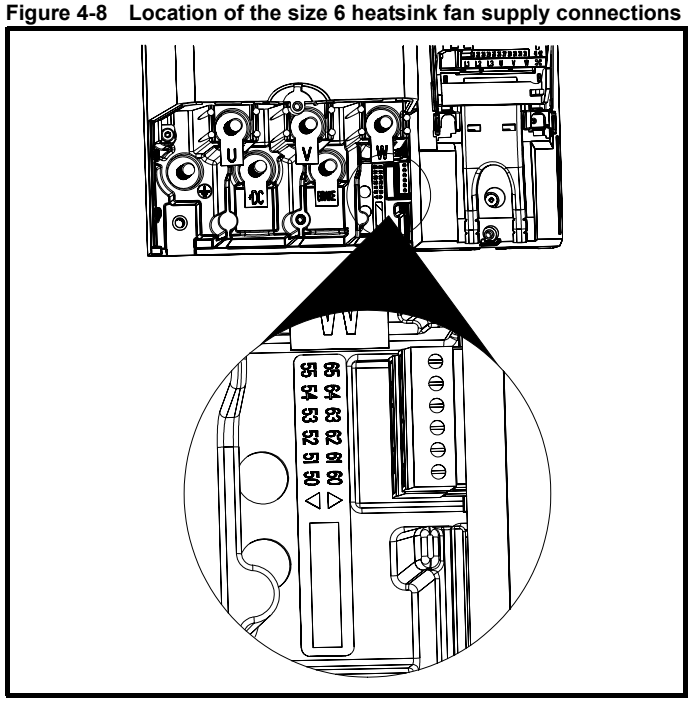

Figure 4-9 Size 6 heatsink fan supply connections

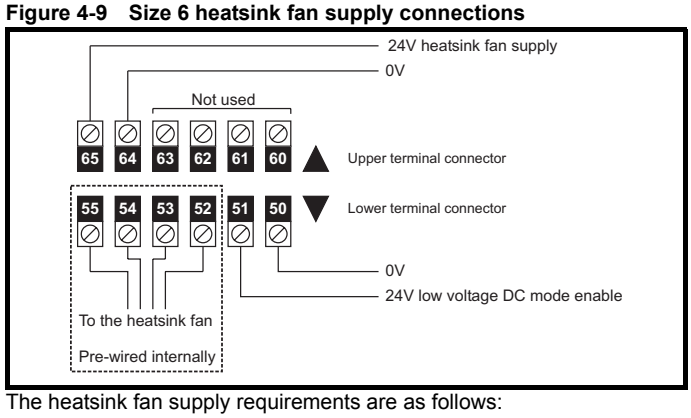

The heatsink fan supply requirements are as follows:

Nominal voltage:	24Vdc
Minimum voltage:	23.5Vdc
Maximum voltage:	27Vdc
Current drawn:	3.3A
Recommended power supply:	24V, 100W, 4.5A
Recommended fuse:	4A fast blow (I^2t less than $20A^2s$)

The 24V power supply is supplied in the free standing cubicle but requires a user 115V or 240V supply.

4.5 Control 24Vdc supply

The 24Vdc input has three main functions.

- It can be used to supplement the drive's own internal 24V when multiple SM-I/O Plus modules are being used and the current drawn by these modules is greater than the drive can supply. (If too much current is drawn from the drive, the drive will initiate a 'PS.24V' trip)
- It can be used as a back-up power supply to keep the control circuits of the drive powered up when the line power supply is removed. This

allows any fieldbus modules or serial communications to continue to operate.

- It can be used to commission the drive when the line power supply is not available, as the display operates correctly. However, the drive will be in the UV trip state unless either line power supply or low voltage DC operation is enabled, therefore diagnostics may not be possible. (Power down save parameters are not saved when using the 24V back-up power supply input.)

The working voltage range of the 24V power supply is as follows:

Maximum continuous operating voltage:	30.0 V
Minimum continuous operating voltage:	19.2 V
Nominal operating voltage:	24.0 V
Minimum start up voltage:	21.6 V
Maximum power supply requirement at 24V:	60 W
Recommended fuse:	3 A, 50 Vdc

Minimum and maximum voltage values include ripple and noise. Ripple and noise values must not exceed 5%.

4.6 Ratings

The input current is affected by the supply voltage and impedance.

Typical input current

The values of typical input current are given to aid calculations for power flow and power loss.

The values of typical input current are stated for a balanced supply.

Maximum continuous input current

The values of maximum continuous input current are given to aid the selection of cables and fuses. These values are stated for the worst case condition with the unusual combination of stiff supply with bad balance. The value stated for the maximum continuous input current would only be seen in one of the input phases. The current in the other two phases would be significantly lower.

The values of maximum input current are stated for a supply with a 2% negative phase-sequence imbalance and rated at the supply fault current given in Table 4-2.

Table 4-2 Supply fault current used to calculate maximum input currents

Model	Symmetrical fault level (kA)
All	100

Table 4-3 Size 1 to 3 input current, fuse and cable size ratings (European)

Model	Typical input current A	Maximum continuous input current A	Fuse rating IEC gG A	Cable size EN60204	
				Input mm^2	Output mm^2
BA1201	7.1	9.5	10	1.5	1.0
BA1202	9.2	11.3	12	1.5	1.0
BA1203	12.5	16.4	20	4.0	1.0
BA1204	15.4	19.1	20	4.0	1.5
BA2201	13.4	18.1	20	4.0	2.5
BA2202	18.2	22.6	25	4.0	4.0
BA2203	24.2	28.3	32	6.0	6.0
BA3201	35.4	43.1	50	16	16
BA3202	46.8	54.3	63	25	25
BA1401	4.1	4.8	8	1.0	1.0
BA1402	5.1	5.8	8	1.0	1.0
BA1403	6.8	7.4	8	1.0	1.0
BA1404	9.3	10.6	12	1.5	1.0
BA1405	10	11	12	1.5	1.0
BA1406	12.6	13.4	16	2.5	1.5
BA2401	15.7	17	20	4.0	2.5
BA2402	20.2	21.4	25	4.0	4.0
BA2403	26.6	27.6	32	6.0	6.0
BA3401	34.2	36.2	40	10	10
BA3402	40.2	42.7	50	16	16
BA3403	51.3	53.5	63	25	25
BA3501	5.0	6.7	8	1.0	1.0
BA3502	6.0	8.2	10	1.0	1.0
BA3503	7.8	11.1	12	1.5	1.0
BA3504	9.9	14.4	16	2.5	1.5
BA3505	13.8	18.1	20	4.0	2.5
BA3506	18.2	22.2	25	4.0	4.0
BA3507	22.2	26.0	32	6.0	6.0

Table 4-4 Size 1 to 3 input current, fuse and cable size ratings (USA)

Model	Typical input current A	Maximum continuous input current A	Fuse rating Class CC <30A Class J >30A A	Cable size UL508C	
				Input AWG	Output AWG
BA1201	7.1	9.5	10	14	18
BA1202	9.2	11.3	15	14	16
BA1203	12.5	16.4	20	12	14
BA1204	15.4	19.1	20	12	14
BA2201	13.4	18.1	20	12	14
BA2202	18.2	22.6	25	10	10
BA2203	24.2	28.3	30	8	8
BA3201	35.4	43.1	45	6	6
BA3202	46.8	54.3	60	4	4
BA1401	4.1	4.8	8	16	22
BA1402	5.1	5.8	8	16	20
BA1403	6.8	7.4	10	16	18
BA1404	9.3	10.6	15	14	16
BA1405	10	11	15	14	14
BA1406	12.6	13.4	15	14	14
BA2401	15.7	17	20	12	14
BA2402	20.2	21.4	25	10	10
BA2403	26.6	27.6	30	8	8
BA3401	34.2	36.2	40	6	6
BA3402	40.2	42.7	45	6	6
BA3403	51.3	53.5	60	4	4
BA3501	5.0	6.7	10	16	18
BA3502	6.0	8.2	10	16	16
BA3503	7.8	11.1	15	14	14
BA3504	9.9	14.4	15	14	14
BA3505	13.8	18.1	20	12	14
BA3506	18.2	22.2	25	10	10
BA3507	22.2	26.0	30	8	8

Table 4-5 Size 4 and larger input current, fuse and cable size ratings

Model	Typical input current	Maximum input current	Fuse option 1		Fuse option 2 semiconductor fuse in series with HRC fuse or breaker		Cable size			
			IEC class gR	North America: Ferraz HSJ	HRC IEC class gG UL class J	Semi-conductor IEC class aR	Input		Output	
	A	A	A	A	A	A	mm^2	AWG	mm^2	AWG
BA4201	62.1	68.9	100	90	90	160	25	3	25	3
BA4202	72.1	78.1	100	100	100	160	35	3	35	3
BA4203	94.5	99.9	125	125	125	200	70	1	70	1
BA4401	61.2	62.3	80	80	80	160	25	3	25	3
BA4402	76.3	79.6	110	110	100	200	35	2	35	2
BA4403	94.1	97.2	125	125	125	200	70	1	70	1
BA5401	126	131	200	175	160	200	95	2/0	95	2/0
BA5402	152	156	250	225	200	250	120	4/0	120	4/0
BA6401	206	215	250	250	250	315	2 x 70	2 x 2/0	2 x 70	2 x 2/0
BA6402	247	258	315	300	300	350	2 x 120	2 x 4/0	2 x 120	2 x 4/0
BA4601	23	26.5	63	60	32	125	4	10	4	10
BA4602	26.1	28.8	63	60	40	125	6	8	6	8
BA4603	32.9	35.1	63	60	50	125	10	8	10	8
BA4604	39	41	63	60	50	125	16	6	16	6
BA4605	46.2	47.9	63	60	63	125	16	6	16	6
BA4606	55.2	56.9	80	60	63	125	25	4	25	4
BA5601	75.5	82.6	125	100	90	160	35	2	35	2
BA5602	89.1	94.8	125	100	125	160	50	1	50	1
BA6601	128	139	160	175	150	315	2 x 50	2 x 1	2 x 50	2 x 1
BA6602	144	155	160	175	160	315	2 x 50	2 x 1	2 x 50	2 x 1

Installation class (ref: IEC60364-5-52:2001)
B1 - Separate cables in conduit.
B2 - Multicore cable in conduit
C - Multicore cable in free air.

NOTE

Cable sizes are from IEC60364-5-52:2001 table A.52.C with correction factor for 40°C ambient of 0.87 (from table A52.14) for cable installation method B2 (multicore cable in conduit).

Cable size may be reduced if a different installation method is used, or if the ambient temperature is lower.

The recommended cable sizes above are only a guide. The mounting and grouping of cables affects their current-carrying capacity, in some cases smaller cables may be acceptable but in other cases a larger cable is required to avoid excessive temperature or voltage drop. Refer to local wiring regulations for the correct size of cables.

NOTE

The recommended output cable sizes assume that the motor maximum current matches that of the drive. Where a motor of reduced rating is used the cable rating may be chosen to match that of the motor. To ensure that the motor and cable are protected against overload, the drive must be programmed with the correct motor rated current.

NOTE

UL listing is dependent on the use of the correct type of UL-listed fuse, and applies when symmetrical short-circuit current does not exceed 5kA for sizes 1 to 3. See Chapter 15 *UL Listing Information* on page 249 for sizing information.

WARNING

Fuses
The AC supply to the drive must be installed with suitable protection against overload and short-circuits. Table 4-3, Table 4-4 and Table 4-5 show recommended fuse ratings. Failure to observe this requirement will cause risk of fire.

A fuse or other protection must be included in all live connections to the AC supply.

An MCB (miniature circuit breaker) or MCCB (moulded-case circuit-breaker) with type C may be used in place of fuses on sizes 1 to 3 under the following conditions:

- The fault-clearing capacity must be sufficient for the installation
- For frame sizes 2 and 3, the drive must be mounted in an enclosure which meets the requirements for a fire enclosure

See Chapter 15 *UL Listing Information* for UL listing requirements.

Fuse types

The fuse voltage rating must be suitable for the drive supply voltage.

Ground connections

The drive must be connected to the system ground of the AC supply. The ground wiring must conform to local regulations and codes of practice.

4.6.1 Main AC supply contactor

The recommended AC supply contactor type for sizes 1 to 6 is AC1.

4.7 Output circuit and motor protection

The output circuit has fast-acting electronic short-circuit protection which limits the fault current to typically no more than five times the rated output current, and interrupts the current in approximately 20µs. No additional short-circuit protection devices are required.

The drive provides overload protection for the motor and its cable. For this to be effective, Pr **0.46** *Motor rated current* must be set to suit the motor.

WARNING

Pr **0.46** *Motor rated current* must be set correctly to avoid a risk of fire in the event of motor overload.

There is also provision for the use of a motor thermistor to prevent over-heating of the motor, e.g. due to loss of cooling.

4.7.1 Cable types and lengths

Since capacitance in the motor cable causes loading on the output of the drive, ensure the cable length does not exceed the values given in Table 4-6, Table 4-7 and Table 4-8.

Use 105°C (221°F) (UL 60/75°C temp rise) PVC-insulated cable with copper conductors having a suitable voltage rating, for the following power connections:

- AC supply to external EMC filter (when used)
- AC supply (or external EMC filter) to drive
- Drive to motor
- Drive to braking resistor

Table 4-6 Maximum motor cable lengths (200V drives)

200V Nominal AC supply voltage						
Model	**Maximum permissible motor cable length for each of the following frequencies**					
	3kHz	**4kHz**	**6kHz**	**8kHz**	**12kHz**	**16kHz**
BA1201	65m (210ft)				50m (165ft)	37m (120ft)
BA1202	100m (330ft)			75m (245ft)		
BA1203	130m (425ft)		100m (330ft)			
BA1204	200m (660ft)	150m (490ft)				
BA2201						
BA2202						
BA2203						
BA3201						
BA3202						
BA4201	250m (820ft)	185m (607ft)	125m (410ft)	90m (295ft)		
BA4202						
BA4203						

Table 4-7 Maximum motor cable lengths (400V drives)

400V Nominal AC supply voltage						
Model	**Maximum permissible motor cable length for each of the following frequencies**					
	3kHz	**4kHz**	**6kHz**	**8kHz**	**12kHz**	**16kHz**
BA1401	65m (210ft)				50m (165ft)	37m (120ft)
BA1402	100m (330ft)			75m (245ft)		
BA1403	130m (425ft)		100m (330ft)			
BA1404	200m (660ft)	150m (490ft)				
BA1405						
BA1406						
BA2401						
BA2402						
BA2403						
BA3401						
BA3402						
BA3403						
BA4401	250m (820ft)	185m (607ft)	125m (410ft)	90m (295ft)		
BA4402						
BA4403						
BA5401						
BA5402						
BA6401						
BA6402						

Table 4-8 Maximum motor cable lengths (575V drives)

575V Nominal AC supply voltage						
Model	**Maximum permissible motor cable length for each of the following frequencies**					
	3kHz	**4kHz**	**6kHz**	**8kHz**	**12kHz**	**16kHz**
BA3501	200m (660ft)	150m (490ft)	100m (330ft)	75m (245ft)		
BA3502						
BA3503						
BA3504						
BA3505						
BA3506						
BA3507						

Table 4-9 Maximum motor cable lengths (690V drives)

690V Nominal AC supply voltage						
Model	**Maximum permissible motor cable length for each of the following frequencies**					
	3kHz	**4kHz**	**6kHz**	**8kHz**	**12kHz**	**16kHz**
BA4601	250m (820ft)	185m (607ft)	125m (410ft)	90m (295ft)		
BA4602						
BA4603						
BA4604						
BA4605						
BA4606						
BA5601						
BA5602						
BA6601						
BA6602						

- Cable lengths in excess of the specified values may be used only when special techniques are adopted; refer to the supplier of the drive.
- The default switching frequency is 3kHz.

High-capacitance cables

The maximum cable length is reduced from that shown in Table 4-6, Table 4-7, Table 4-8 and Table 4-9 if high capacitance motor cables are used.

Most cables have an insulating jacket between the cores and the armor or shield; these cables have a low capacitance and are recommended. Cables that do not have an insulating jacket tend to have high capacitance; if a cable of this type is used, the maximum cable length is half that quoted in the tables. (Figure 4-10 shows how to identify the two types.)

Figure 4-10 Cable construction influencing the capacitance

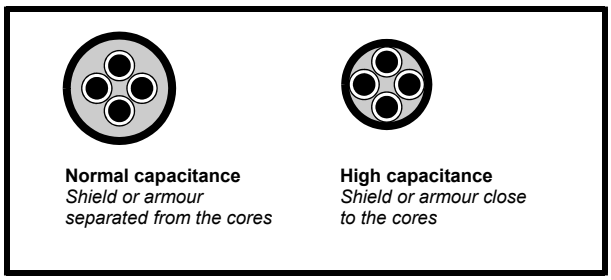

The cable used for Table 4-6, Table 4-7, Table 4-8 and Table 4-9 is shielded and contains four cores. Typical capacitance for this type of cable is 130pF/m (i.e. from one core to all others and the shield connected together).

4.7.2 Motor winding voltage

The PWM output voltage can adversely affect the inter-turn insulation in the motor. This is because of the high rate of change of voltage, in conjunction with the impedance of the motor cable and the distributed nature of the motor winding.

For normal operation with AC supplies up to 500Vac and a standard motor with a good quality insulation system, there is no need for any special precautions. In case of doubt the motor supplier should be consulted.

Special precautions are recommended under the following conditions, but only if the motor cable length exceeds 10m:

- AC supply voltage exceeds 500V
- DC supply voltage exceeds 670V
- Operation of 400V drive with continuous or very frequent sustained braking
- Multiple motors connected to a single drive

For multiple motors, the precautions given in section 4.7.3 *Multiple motors* should be followed.

For the other cases listed, it is recommended that an inverter-rated motor be used. This has a reinforced insulation system intended by the manufacturer for repetitive fast-rising pulsed voltage operation.

Users of 575V NEMA rated motors should note that the specification for inverter-rated motors given in NEMA MG1 section 31 is sufficient for motoring operation but not where the motor spends significant periods braking. In that case an insulation peak voltage rating of 2.2kV is recommended.

If it is not practical to use an inverter-rated motor, an output choke (inductor) should be used. The recommended type is a simple iron-cored component with a reactance of about 2%. The exact value is not critical. This operates in conjunction with the capacitance of the motor cable to increase the rise-time of the motor terminal voltage and prevent excessive electrical stress.

4.7.3 Multiple motors

Open-loop only (not RFC mode)

If the drive is to control more than one motor, one of the fixed V/F modes should be selected (Pr **5.14** = Fd or SrE). Make the motor connections as shown in Figure 4-11 and Figure 4-12. The maximum cable lengths in Table 4-6, Table 4-7, Table 4-8 and Table 4-9 apply to the sum of the total cable lengths from the drive to each motor.

It is recommended that each motor is connected through a protection relay since the drive cannot protect each motor individually. For ⅄ connection, a sinusoidal filter or an output inductor must be connected as shown in Figure 4-12, even when the cable lengths are less than the maximum permissible. For details of inductor sizes refer to the supplier of the drive.

Figure 4-11 Preferred chain connection for multiple motors

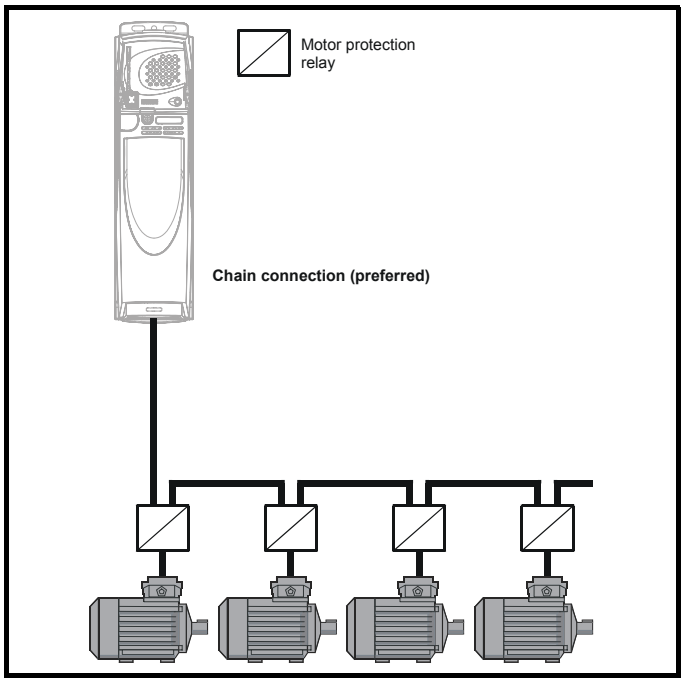

Figure 4-12 Alternative connection for multiple motors

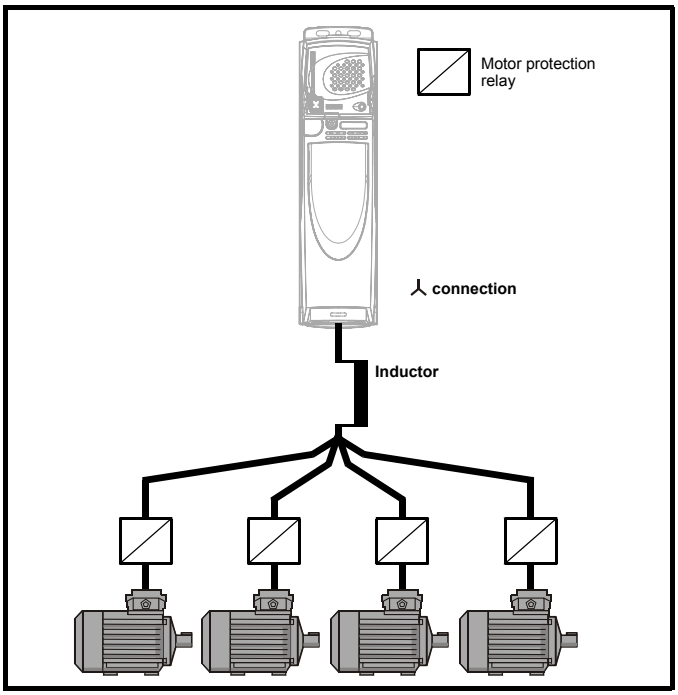

4.7.4 ⅄ / Δ motor operation

The voltage rating for ⅄ and Δ connections of the motor should always be checked before attempting to run the motor.

The default setting of the motor rated voltage parameter is the same as the drive rated voltage, i.e.

400V drive 400V rated voltage
200V drive 200V rated voltage

A typical 3 phase motor would be connected in ⅄ for 400V operation or Δ for 200V operation, however, variations on this are common e.g. ⅄ 690V Δ 400V

Incorrect connection of the windings will cause severe under or over fluxing of the motor, leading to a very poor output torque or motor saturation and overheating respectively.

4.7.5 Output contactor

WARNING

If the cable between the drive and the motor is to be interrupted by a contactor or circuit breaker, ensure that the drive is disabled before the contactor or circuit breaker is opened or closed. Severe arcing may occur if this circuit is interrupted with the motor running at high current and low speed.

A contactor is sometimes required to be installed between the drive and motor for safety purposes.

The recommended motor contactor is the AC3 type.

Switching of an output contactor should only occur when the output of the drive is disabled.

Opening or closing of the contactor with the drive enabled will lead to:

1. OI.AC trips (which cannot be reset for 10 seconds)
2. High levels of radio frequency noise emission
3. Increased contactor wear and tear

4.8 Braking

Braking occurs when the drive is decelerating the motor, or is preventing the motor from gaining speed due to mechanical influences. During braking, energy is returned to the drive from the motor.

When the motor is being braked by the drive, the maximum regenerated power that the drive can absorb is equal to the power dissipation (losses) of the drive.

When the regenerated power is likely to exceed these losses, the DC bus voltage of the drive increases. Under default conditions, the drive brakes the motor under PI control, which extends the deceleration time as necessary in order to prevent the DC bus voltage from rising above a user defined set-point.

If the drive is expected to rapidly decelerate a load, or to hold back an overhauling load, a braking resistor must be installed.

Table 4-10 shows the DC voltage level at which the drive turns on the braking transistor.

Table 4-10 Braking transistor turn on voltage

Drive voltage rating	DC bus voltage level
200V	390V
400V	780V
575V	930V
690V	1120V

NOTE

When a braking resistor is used, Pr **0.15** should be set to FASt ramp mode.

WARNING

High temperatures

Braking resistors can reach high temperatures. Locate braking resistors so that damage cannot result. Use cable having insulation capable of withstanding high temperatures.

4.8.1 Heatsink mounted braking resistor

A resistor has been especially designed to be mounted within the heatsink of the drive (sizes 1 and 2). See the Installation Sheet provided with the heatsink mounted braking resistor. The design of the resistor is such that no thermal protection circuit is required, as the device will fail safely under fault conditions. On sizes 1 and 2, the in built software overload protection is set up at default for the designated heatsink mounted resistor. Table 4-11 provides the resistor data for each drive rating.

NOTE

The heatsink mounted resistor is suitable for applications with a low level of regen energy only. See power rating below.

CAUTION

Braking resistor overload protection parameter settings

Failure to observe the following information may damage the resistor.

The drive's software contains an overload protection function for a braking resistor. On size 1 and 2 this function is enabled at default to protect the heatsink mounted resistor. Below are the parameter settings.

Parameter		200V drive	400V drive
Full power braking time	Pr **10.30**	0.04	0.02
Full power braking period	Pr **10.31**	2.0	

For more information on the braking resistor software overload protection, see Pr **10.30** and Pr **10.31** full descriptions in the *Advanced User Guide*.

If the heatsink mounted braking resistor is to be used at more than half of its average power rating then the drive's cooling fan must be at full speed controlled by setting Pr **6.45** to On (1).

Table 4-11 Heatsink mounted braking resistor data

Parameter	Size 1	Size 2
Part number	1220-2756-01	1220-2758-01
DC resistance at 25°C	75Ω	37.5Ω
Peak instantaneous power over 1ms at nominal resistance	8kW	16kW
Average power over 60s *	50W	100W
Ingress Protection (IP) rating	IP54	
Maximum altitude	2000m	

* To keep the temperature of the resistor below 70°C (158°F) in a 30°C (86°F) ambient, the average power rating is 50W for size 1 and 100W for size 2. The above parameter settings ensure this is the case.

Size 3 and larger do not have heatsink mounted braking resistors, hence the default values of Pr **10.30** and Pr **10.31** are 0 (i.e. software braking resistor overload protection disabled).

4.8.2 External braking resistor

WARNING

Overload protection

When an external braking resistor is used, it is essential that an overload protection device is incorporated in the braking resistor circuit; this is described in Figure 4-13 on page 62.

When a braking resistor is to be mounted outside the enclosure, ensure that it is mounted in a ventilated metal housing that will perform the following functions:

- Prevent inadvertent contact with the resistor
- Allow adequate ventilation for the resistor

When compliance with EMC emission standards is required, external connection requires the cable to be armored or shielded, since it is not fully contained in a metal enclosure. See section 4.10.5 *Compliance with generic emission standards* on page 68 for further details.

Internal connection does not require the cable to be armored or shielded.

Minimum resistances and power ratings

Table 4-12 Minimum resistance values and peak power rating for the braking resistor at 40°C (104°F)

Model	Minimum resistance* Ω	Instantaneous power rating kW	Average power for 60s kW
BA1201	43	3.5	1.5
BA1202			2.2
BA1203			3.0
BA1204	29	5.3	4.4
BA2201	18	8.9	6.0
BA2202			8.0
BA2203			8.9
BA3201	5.0	30.3	13.1
BA3202			19.3
BA4201**	5.0	30.3	22.5
BA4202**			27.8
BA4203**			30.3
BA1401	74	8.3	1.5
BA1402			2.2
BA1403			3.0
BA1404			4.4
BA1405	58	10.6	6.0
BA1406			8.0
BA2401	19	33.1	9.6
BA2402			13.1
BA2403			19.3
BA3401	18	35.5	22.5
BA3402			27.8
BA3403			33.0
BA4401**	11	55.3	45.0
BA4402**			53.0
BA4403**	9	67.6	67.5
BA5401**	7	86.9	82.5
BA5402**			86.9
BA6401	5	121.7	90
BA6402			110
BA3501	18	50.7	4.4
BA3502			6.0
BA3503			8.0
BA3504			9.6
BA3505			13.1
BA3506			19.3
BA3507			22.5
BA4601**	13	95.0	19.3
BA4602**			22.5
BA4603**			27.8
BA4604**			33.0
BA4605**			45.0
BA4606**			55.5
BA5601**	10	125.4	67.5
BA5602**			82.5
BA6601	10	125.4	112.5
BA6602			125.4

* Resistor tolerance: ±10%

** The minimum resistance value specified is for a stand-alone drive only. If the drive is part of a common DC bus system a different value must be used. Contact the supplier of the drive for more information.

For high-inertia loads or under continuous braking, the *continuous power* dissipated in the braking resistor may be as high as the power rating of the drive. The total *energy* dissipated in the braking resistor is dependent on the amount of energy to be extracted from the load.

The instantaneous power rating refers to the short-term maximum power dissipated during the *on* intervals of the pulse width modulated braking control cycle. The braking resistor must be able to withstand this dissipation for short intervals (milliseconds). Higher resistance values require proportionately lower instantaneous power ratings.

In most applications, braking occurs only occasionally. This allows the continuous power rating of the braking resistor to be much lower than the power rating of the drive. It is essential, though, that the instantaneous power rating and energy rating of the braking resistor are sufficient for the most extreme braking duty that is likely to be encountered.

Optimisation of the braking resistor requires a careful consideration of the braking duty.

Select a value of resistance for the braking resistor that is not less than the specified minimum resistance. Larger resistance values may give a cost saving, as well as a safety benefit in the event of a fault in the braking system. Braking capability will then be reduced, which could cause the drive to trip during braking if the value chosen is too large.

Thermal protection circuit for the braking resistor

The thermal protection circuit must disconnect the AC supply from the drive if the resistor becomes overloaded due to a fault. Figure 4-13 shows a typical circuit arrangement.

Figure 4-13 Typical protection circuit for a braking resistor

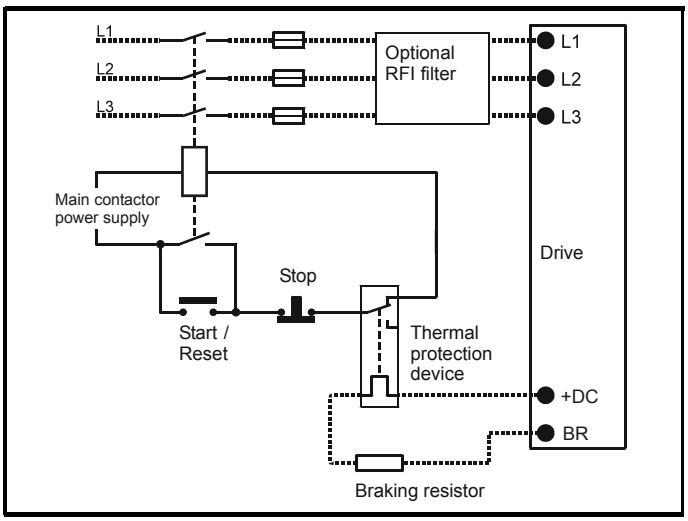

See Figure 4-1 on page 51, Figure 4-2 and Figure 4-3 on page 52, and Figure 4-4 on page 53 for the location of the +DC and braking resistor connections.

4.8.3 Braking resistor software overload protection

The drive software contains an overload protection function for a braking resistor. In order to enable and set-up this function, it is necessary to enter two values into the drive:

- Resistor short-time overload time (Pr **10.30**)
- Resistor minimum time between repeated short-time overloads (Pr **10.31**)

This data should be obtained from the manufacturer of the braking resistors.

Pr **10.39** gives an indication of braking resistor temperature based on a simple thermal model. Zero indicates the resistor is close to ambient and 100% is the maximum temperature the resistor can withstand. A br.rS alarm is given if this parameter is above 75% and the braking IGBT is active. An It.br trip will occur if Pr **10.39** reaches 100%, when Pr **10.37** is set to 0 (default value) or 1.

If Pr **10.37** is equal to 2 or 3 an It.br trip will not occur when Pr **10.39** reaches 100%, but instead the braking IGBT will be disabled until Pr **10.39** falls below 95%. This option is intended for applications with

parallel connected DC buses where there are several braking resistors, each of which cannot withstand full DC bus voltage continuously. With this type of application it is unlikely the braking energy will be shared equally between the resistors because of voltage measurement tolerances within the individual drives. Therefore with Pr **10.37** set to 2 or 3, then as soon as a resistor has reached its maximum temperature the drive will disable the braking IGBT, and another resistor on another drive will take up the braking energy. Once Pr **10.39** has fallen below 95% the drive will allow the braking IGBT to operate again.

See the *Advanced User Guide* for more information on Pr **10.30**, Pr **10.31**, Pr **10.37** and Pr **10.39**.

This software overload protection should be used in addition to an external overload protection device.

WARNING

Fire Mode - important warning.
When Fire Mode is active the motor overload and thermal protection are disabled, as well as a number of drive protection functions. Fire Mode is provided for use only in emergency situations where the safety risk from disabling protection is less than the risk from the drive tripping - typically in smoke extraction operation to permit evacuation of a building. The use of Fire Mode itself causes a risk of fire from overloading of the motor or drive, so it must only be used after careful consideration of the balance of risks.

Care must be taken to prevent inadvertent activation or de-activation of Fire Mode. Fire Mode is indicated by a flashing display text warning "Fire mode active".

Care must be taken to ensure that parameters Pr **1.53** or Pr **1.54** are not inadvertently re-allocated to different inputs or variables. It should be noted that, by default, Pr **1.54** is controlled from digital input 4 and changing Pr **6.04** or Pr **8.24** can re-allocate this digital input to another parameter. These parameters are at access level 2 in order to minimise the risk of inadvertent or unauthorized changes. It is recommended that User Security be applied to further reduce the risk (see section 5.10 *Parameter access level and security* on page 81). These parameters may also be changed via serial communications so adequate precautions should be taken if this functionality is utilised.

4.9 Ground leakage

The ground leakage current depends upon whether the internal EMC filter is installed. The drive is supplied with the filter installed. Instructions for removing the internal filter are given in Figure 4-19 *Removal of internal EMC filter (size 1 to 3)* and Figure 4-20 *Removal of internal EMC filter (sizes 4 to 6)* on page 65.

With internal filter installed:
Size 1 to 3: 28mA* AC at 400V 50Hz

30µA DC with a 600V DC bus (10MΩ)

Size 4 to 6: 56mA* AC at 400V 50Hz

18µA DC with a 600V DC bus (33MΩ)

* Proportional to the supply voltage and frequency.

With internal filter removed:
<1mA

Note that in both cases there is an internal voltage surge protection device connected to ground. Under normal circumstances this carries negligible current.

WARNING

When the internal filter is installed the leakage current is high. In this case a permanent fixed ground connection must be provided, or other suitable measures taken to prevent a safety hazard occurring if the connection is lost.

4.9.1 Use of residual current device (RCD)

There are three common types of ELCB / RCD:

1. AC - detects AC fault currents
2. A - detects AC and pulsating DC fault currents (provided the DC current reaches zero at least once every half cycle)
3. B - detects AC, pulsating DC and smooth DC fault currents
   - Type AC should never be used with drives.
   - Type A can only be used with single phase drives
   - Type B must be used with three phase drives

WARNING

Only type B ELCB / RCD are suitable for use with 3 phase inverter drives.

If an external EMC filter is used, a delay of at least 50ms should be incorporated to ensure spurious trips are not seen. The leakage current is likely to exceed the trip level if all of the phases are not energized simultaneously.

4.10 EMC (Electromagnetic compatibility)

The requirements for EMC are divided into three levels in the following three sections:

Section 4.10.3, General requirements for all applications, to ensure reliable operation of the drive and minimise the risk of disturbing nearby equipment. The immunity standards specified in section 11 will be met, but no specific emission standards. Note also the special requirements given in *Surge immunity of control circuits - long cables and connections outside a building* on page 70 for increased surge immunity of control circuits where control wiring is extended.

Section 4.10.4, Requirements for meeting the EMC standard for power drive systems, IEC61800-3 (EN61800-3).

Section 4.10.5, Requirements for meeting the generic emission standards for the industrial environment, IEC61000-6-4, EN61000-6-4, EN50081-2.

The recommendations of section 4.10.3 will usually be sufficient to avoid causing disturbance to adjacent equipment of industrial quality. If particularly sensitive equipment is to be used nearby, or in a non-industrial environment, then the recommendations of section 4.10.4 or section 4.10.5 should be followed to give reduced radio-frequency emission.

In order to ensure the installation meets the various emission standards described in:

- The EMC data sheet available from the supplier of the drive
- The Declaration of Conformity at the front of this manual
- Chapter 13 *Technical Data* on page 219

...the correct external EMC filter must be used and all of the guidelines in section 4.10.3 *General requirements for EMC* and section 4.10.5 *Compliance with generic emission standards* must be followed.

Table 4-13 Affinity and EMC filter cross reference

Drive	Schaffner	Epcos
	CT part no.	CT part no.
BA1201 to BA1202	4200-6118	4200-6121
BA1203 to BA1204	4200-6119	4200-6120
BA2201 to BA2203	4200-6210	4200-6211
BA3201 to BA3202	4200-6307	4200-6306
BA4201 to BA4203	4200-6406	4200-6405
BA1401 to BA1404	4200-6118	4200-6121
BA1405 to BA1406	4200-6119	4200-6120
BA2401 to BA2403	4200-6210	4200-6211
BA3401 to BA3403	4200-6305	4200-6306
BA4401 to BA4403	4200-6406	4200-6405
BA5401 to BA5402	4200-6503	4200-6501
BA6401 to BA6402	4200-6603	4200-6601
BA3501 to BA3507	4200-6309	4200-6308
BA4601 to BA4606	4200-6408	4200-6407
BA5601 to BA5602	4200-6504	4200-6502
BA6601 to BA6602	4200-6604	4200-6602

WARNING

High ground leakage current
When an EMC filter is used, a permanent fixed ground connection must be provided which does not pass through a connector or flexible power cord. This includes the internal EMC filter.

NOTE

The installer of the drive is responsible for ensuring compliance with the EMC regulations that apply where the drive is to be used.

4.10.1 Grounding hardware

The drive is supplied with a grounding bracket, and sizes 1 to 3 with a grounding clamp, to facilitate EMC compliance. They provide a convenient method for direct grounding of cable shields without the use of "pig-tails". Cable shields can be bared and clamped to the grounding bracket using metal clips or clamps[1] (not supplied) or cable ties. Note that the shield must in all cases be continued through the clamp to the intended terminal on the drive, in accordance with the connection details for the specific signal.

[1] A suitable clamp is the Phoenix DIN rail mounted SK14 cable clamp (for cables with a maximum outer diameter of 14mm).

See Figure 4-14 and Figure 4-15 for details on installing the grounding clamp.

See Figure 4-16 for details on installing the grounding bracket.

Figure 4-14 Installation of grounding clamp (size 1 and 2)

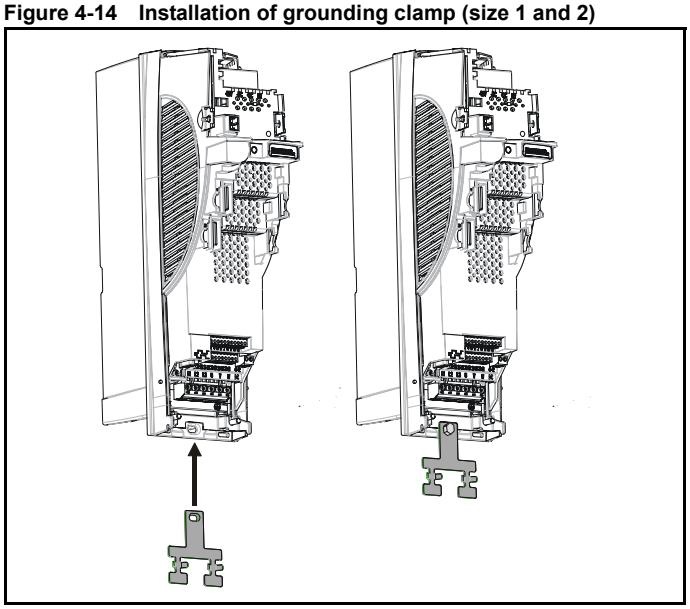

Figure 4-15 Installation of grounding clamp (size 3)

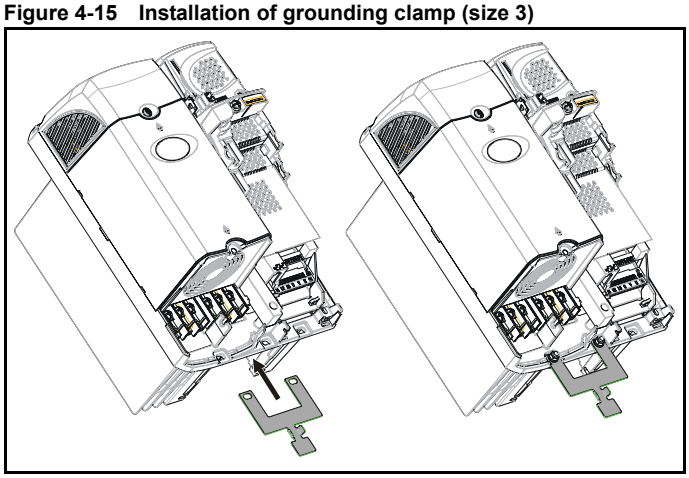

Figure 4-16 Installation of grounding bracket (sizes 1 to 6)

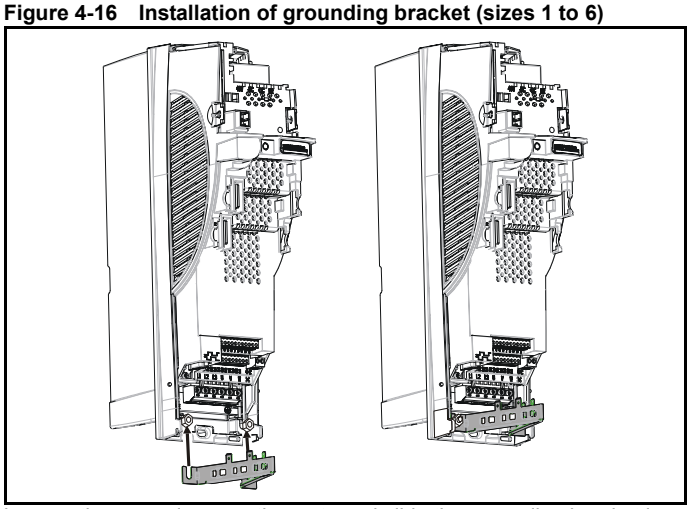

Loosen the ground connection nuts and slide the grounding bracket in the direction shown. Once in place, re-tighten the ground connection nuts.

WARNING

On size 1 and 2, the grounding bracket is secured using the power ground terminal of the drive. Ensure that the supply ground connection is secure after installing / removing the grounding bracket. Failure to do so will result in the drive not being grounded.

A faston tab is located on the grounding bracket for the purpose of connecting the drive 0V to ground should the user require to do so.

When a size 4 or 5 is through-panel mounted, the grounding link bracket must be folded upwards. A screw can be used to secure the bracket or it can be located under the mounting bracket to ensure that a ground connection is made. This is required to provide a grounding point for the grounding bracket as shown in Figure 4-17.

Figure 4-17 Size 4 and 5 grounding link bracket in its surface mount position (as supplied)

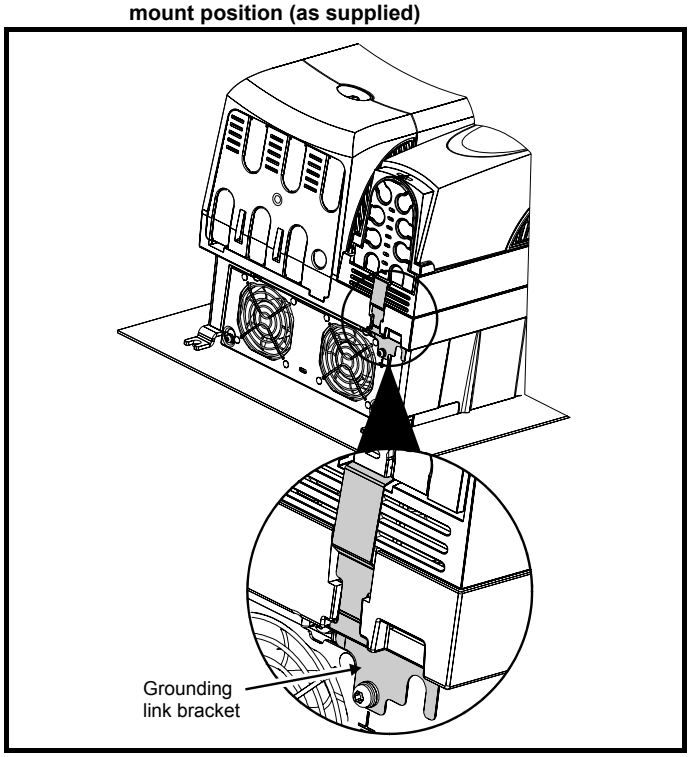

Figure 4-18 Size 4 and 5 grounding link bracket folded up into its through- panel mount position

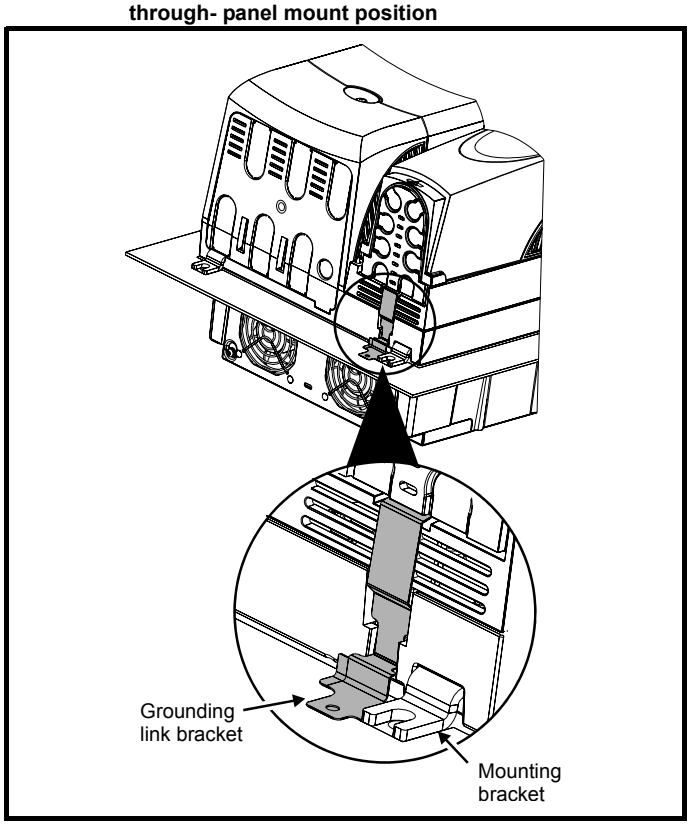

4.10.2 Internal EMC filter

It is recommended that the internal EMC filter be kept in place unless there is a specific reason for removing it.

WARNING

For frame sizes 3 and above, when the drive is used with ungrounded (IT) supplies the internal EMC filter must be removed unless additional motor ground fault protection is installed or, in the case of size 3 only, the external filter is also used.
For instructions on removal, refer to Figure 4-19 and Figure 4-20.
For details of ground fault protection contact the supplier of the drive.

If the drive is used as a motoring drive as part of a Unidrive SP regen system, then the internal EMC filter must be removed.

The internal EMC filter reduces radio-frequency emission into the line power supply. Where the motor cable is short, it permits the requirements of EN61800-3 to be met for the second environment - see section 4.10.4 *Compliance with EN 61800-3 (standard for Power Drive Systems)* on page 67 and section 13.1.23 *Electromagnetic compatibility (EMC)* on page 231. For longer motor cables the filter continues to provide a useful reduction in emission level, and when used with any length of shielded motor cable up to the limit for the drive, it is unlikely that nearby industrial equipment will be disturbed. It is recommended that the filter be used in all applications unless the instructions given above require it to be removed or the ground leakage current of 28mA for size 1 to 3 or 56mA for size 4 to 6 is unacceptable. See Figure 4-19 and Figure 4-20 for details of removing and installing the internal EMC filter.

Figure 4-19 Removal of internal EMC filter (size 1 to 3)

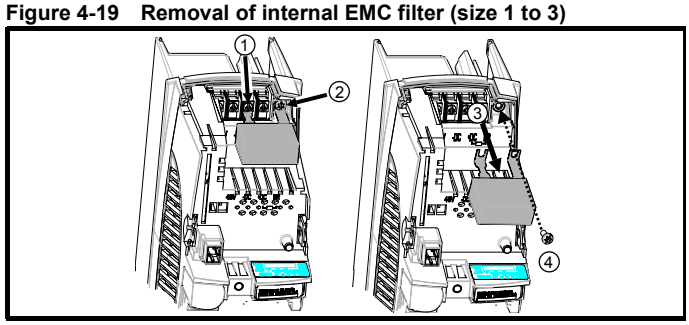

Loosen / remove screws as shown (1) and (2).

Remove filter (3), and ensure the screws are replaced and re-tightened (4).

Figure 4-20 Removal of internal EMC filter (sizes 4 to 6)

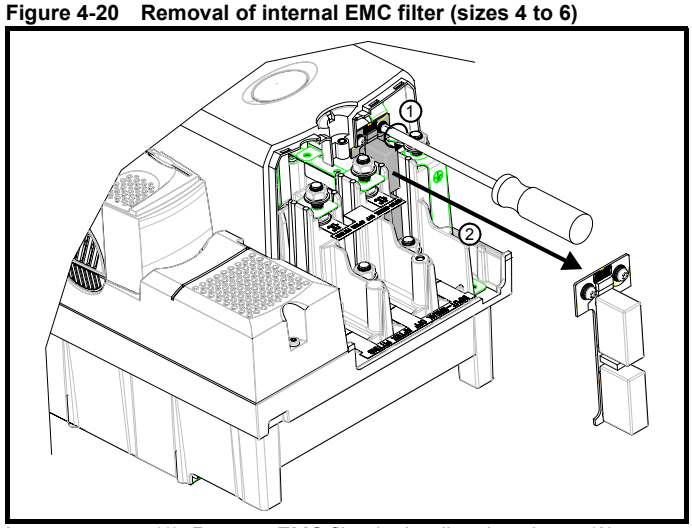

Loosen screws (1). Remove EMC filter in the direction shown (2).

4.10.3 General requirements for EMC

Ground (earth) connections

The grounding arrangements should be in accordance with Figure 4-21, which shows a single drive on a back-plate with or without an additional enclosure.

Figure 4-21 shows how to manage EMC when using an unshielded motor cable. However a shielded cable is preferable, in which case it should be installed as shown in section 4.10.5 *Compliance with generic emission standards* on page 68.

Figure 4-21 General EMC enclosure layout showing ground connections

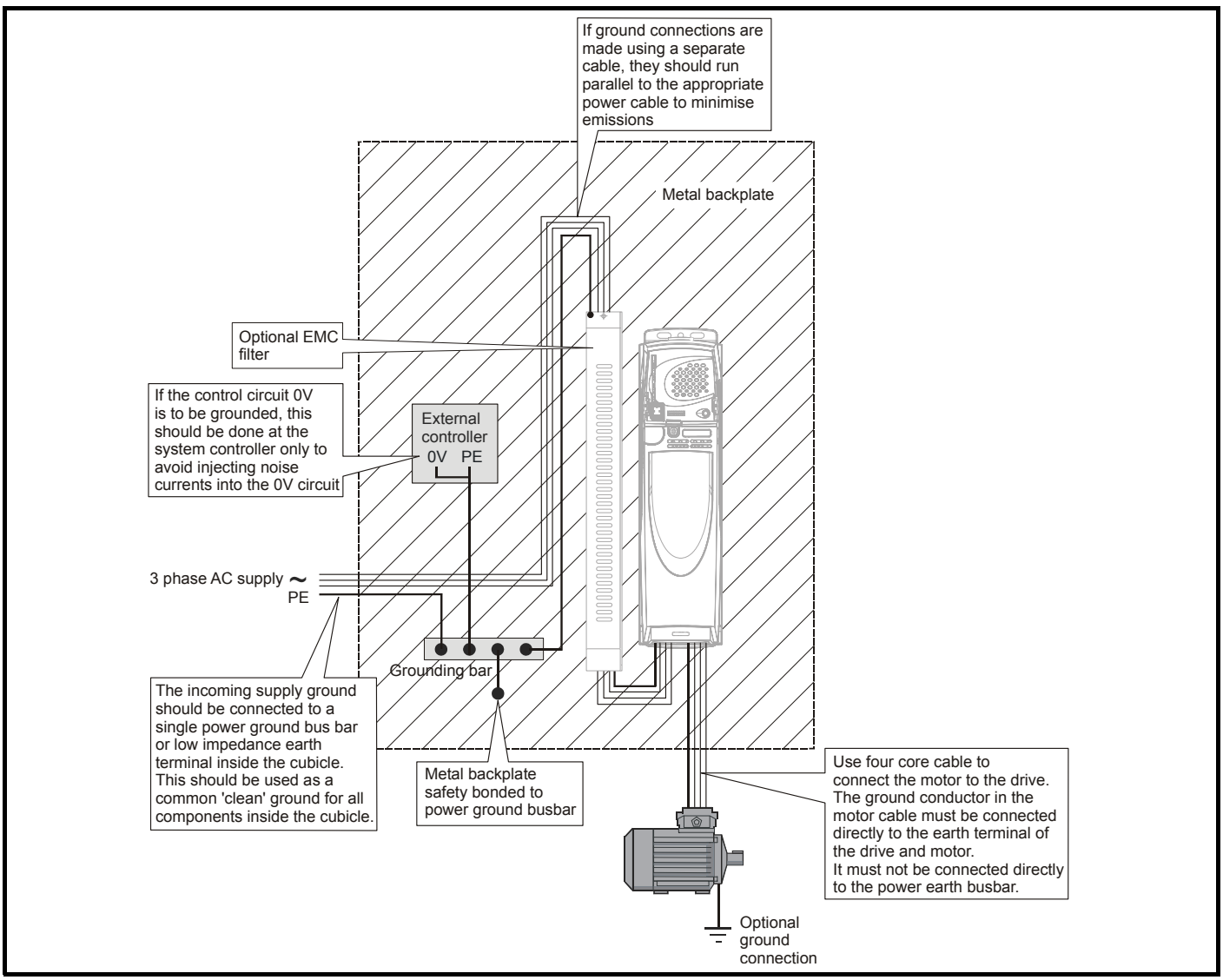

Cable layout

Figure 4-22 indicates the clearances which should be observed around the drive and related 'noisy' power cables by all sensitive control signals / equipment.

Figure 4-22 Drive cable clearances

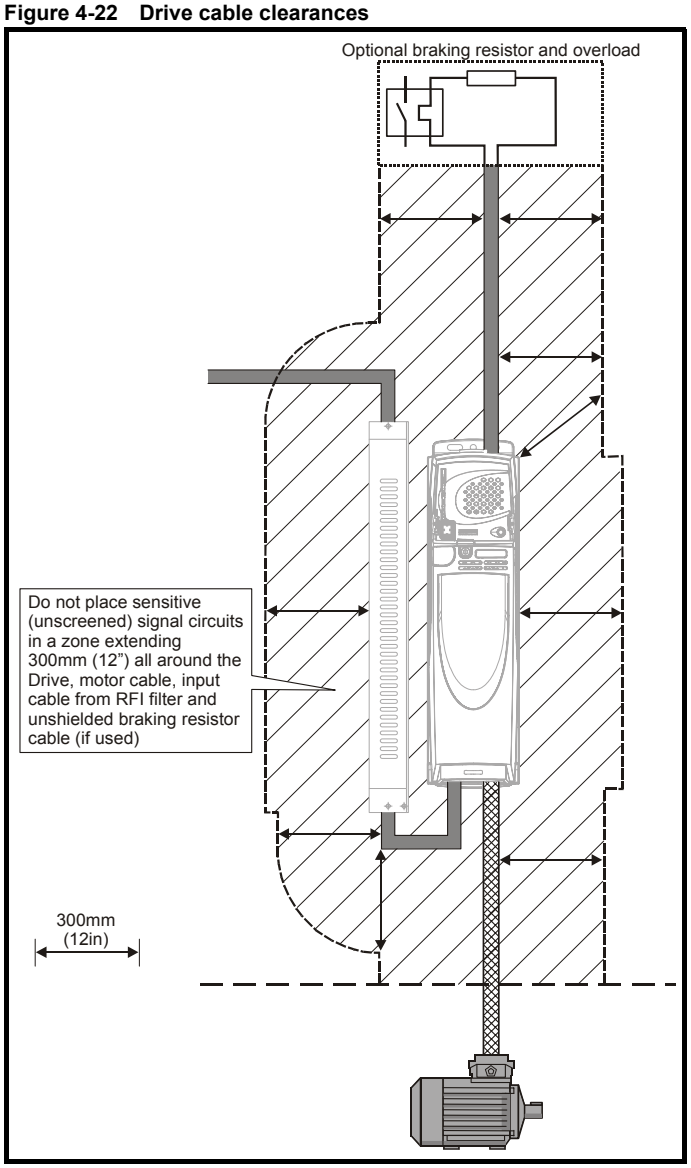

NOTE

Any signal cables which are carried inside the motor cable (i.e. motor thermistor, motor brake) will pick up large pulse currents via the cable capacitance. The shield of these signal cables must be connected to ground close to the motor cable, to avoid this noise current spreading through the control system.

4.10.4 Compliance with EN 61800-3 (standard for Power Drive Systems)

Meeting the requirements of this standard depends on the environment that the drive is intended to operate in, as follows:

Operation in the first environment

Observe the guidelines given in section 4.10.5 *Compliance with generic emission standards* on page 68. An external EMC filter will always be required.

CAUTION

This is a product of the restricted distribution class according to IEC 61800-3

In a residential environment this product may cause radio interference in which case the user may be required to take adequate measures.

Operation in the second environment

In all cases a shielded motor cable must be used, and an EMC filter is required for all Affinity drives with a rated input current of less than 100A.

The drive contains an in-built filter for basic emission control. In some cases feeding the motor cables (U, V and W) once through a ferrite ring can maintain compliance for longer cable lengths. The requirements of operating in the second environment are met, depending on the motor cable length for 3kHz switching frequency as stated in Table 4-14.

Table 4-14 Second environment emission compliance

Drive size	Filter	Voltage	Motor cable length (m)		
			0 to 4	4 to 10	10 to 100
1	In-built	Any	Unrestricted	Restricted	
	In-built and ferrite ring	Any	Unrestricted		Restricted
2	In-built	Any	Restricted		
	In-built and ferrite ring	Any	Unrestricted		Restricted
3	In-built	Any	Restricted		
4	In-built	Any	Restricted		
5	In-built	200 & 400	Unrestricted		
		690	Restricted		
6	In-built	Any	Unrestricted		

Key:

Restricted: EN 61800-3 second environment, restricted distribution (Additional measures may be required to prevent interference)

Unrestricted: EN 61800-3 second environment, unrestricted distribution

For longer motor cables, an external filter is required. Where a filter is required, follow the guidelines in section 4.10.5 *Compliance with generic emission standards* .

Where a filter is not required, follow the guidelines given in section 4.10.3 *General requirements for EMC* on page 66.

CAUTION

The second environment typically includes an industrial low-voltage power supply network which does not supply buildings used for residential purposes. Operating the drive in this environment without an external EMC filter may cause interference to nearby electronic equipment whose sensitivity has not been appreciated. The user must take remedial measures if this situation arises. If the consequences of unexpected disturbances are severe, it is recommended that the guidelines in section 4.10.5 *Compliance with generic emission standards* be adhered to.

Refer to section 13.1.23 *Electromagnetic compatibility (EMC)* on page 231 for further information on compliance with EMC standards and definitions of environments.

Detailed instructions and EMC information are given in the *EMC Data Sheet* which is available from the supplier of the drive.

4.10.5 Compliance with generic emission standards

The following information applies to frame sizes 1 to 5.

Size 6 upwards does not comply with the requirements of the generic standards for radiated emission.

Size 6 complies with the requirements for conducted emission.

Use the recommended filter and shielded motor cable. Observe the layout rules given in Figure 4-23. Ensure the AC supply and ground cables are at least 100mm from the power module and motor cable.

Figure 4-23 Supply and ground cable clearance (size 1 to 3)

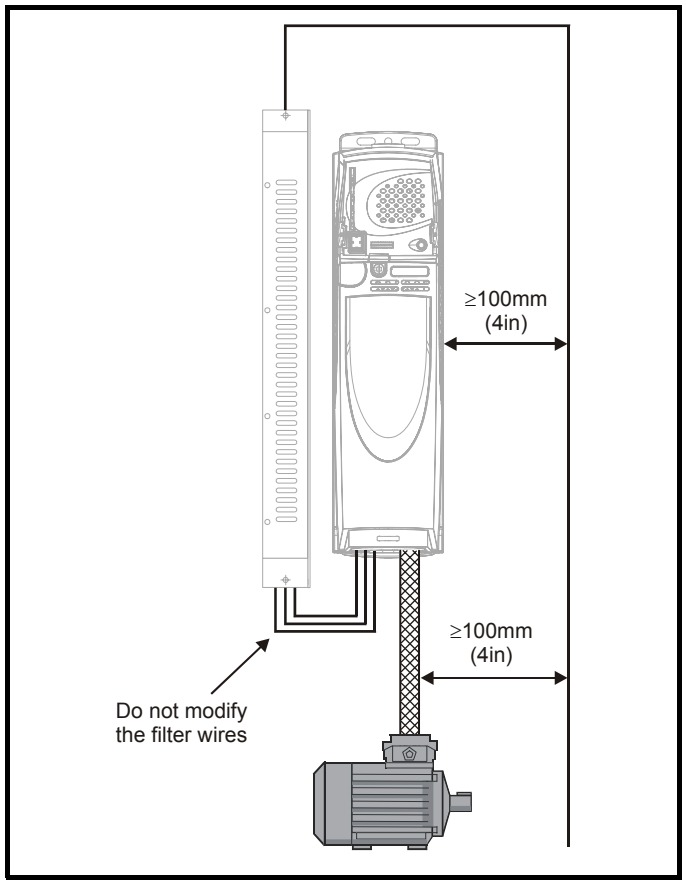

Figure 4-24 Supply and ground cable clearance (size 4 to 6)

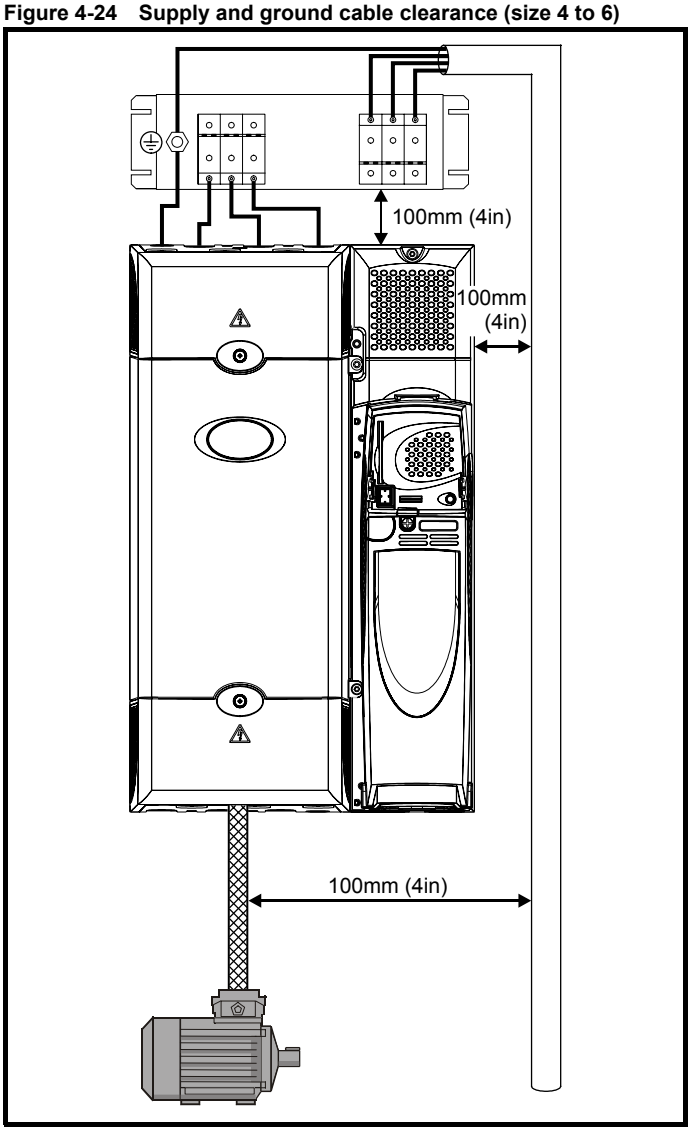

Avoid placing sensitive signal circuits in a zone 300mm (12in) all around the power module.

Figure 4-25 Sensitive signal circuit clearance

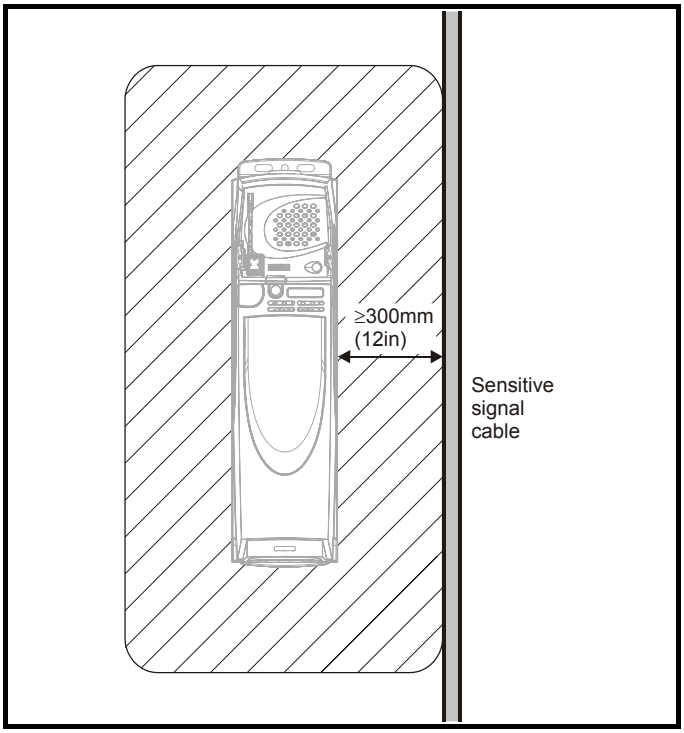

Ensure good EMC grounding.

Figure 4-26 Grounding the drive, motor cable shield and filter

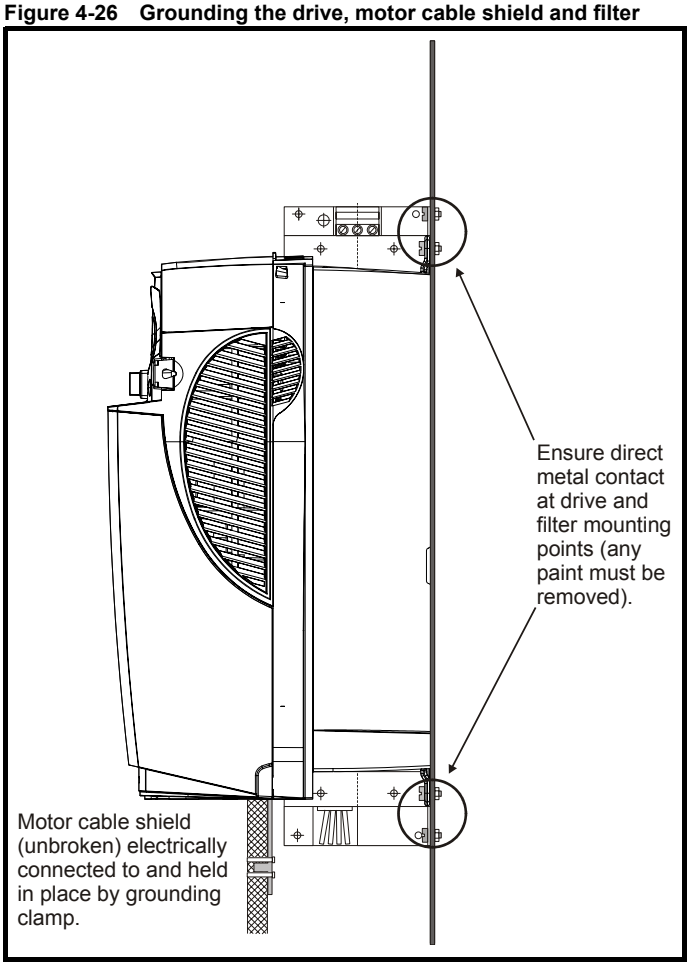

Connect the shield of the motor cable to the ground terminal of the motor frame using a link that is as short as possible and not exceeding 50mm (2in) long. A full 360° termination of the shield to the terminal housing of the motor is beneficial.

It is unimportant for EMC purposes whether the motor cable contains an internal (safety) ground core, or there is a separate external ground conductor, or grounding is through the shield alone. An internal ground core will carry a high noise current and therefore it must be terminated as close as possible to the shield termination.

Figure 4-27 Grounding the motor cable shield

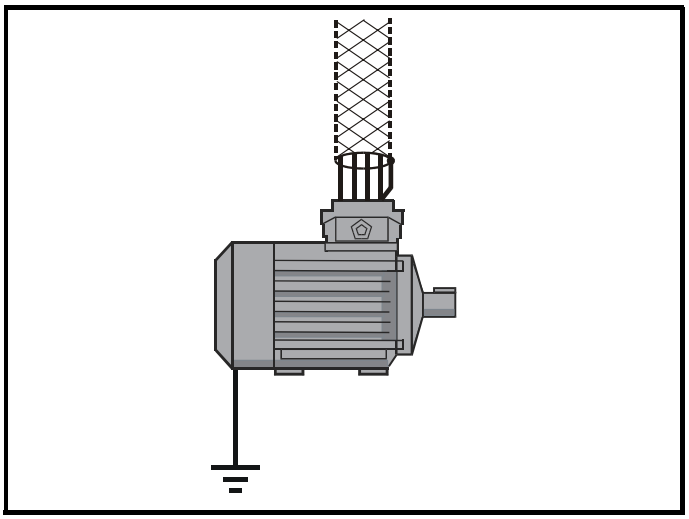

Unshielded wiring to the optional braking resistor(s) may be used, provided the wiring does not run external to the enclosure. Ensure a minimum spacing of 300mm (12in) from signal wiring and the AC supply wiring to the external EMC filter. Otherwise this wiring must be shielded.

Figure 4-28 Shielding requirements of optional external braking resistor

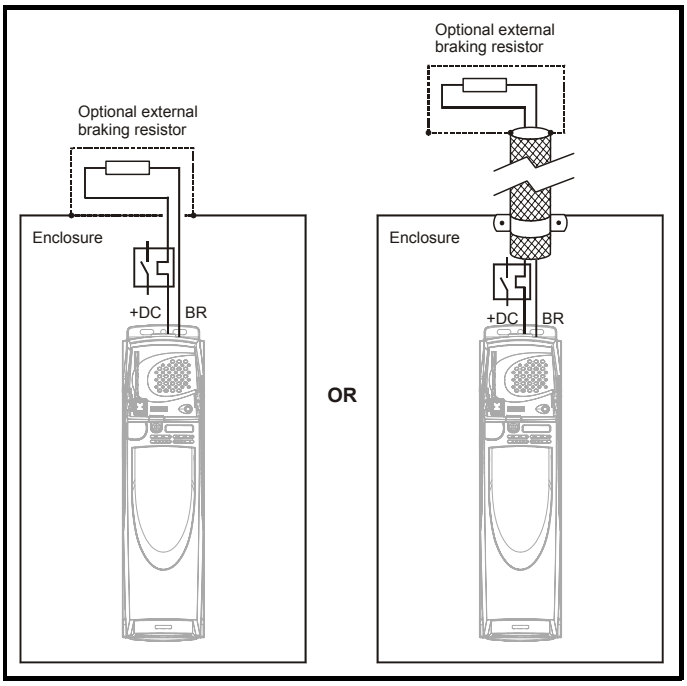

If the control wiring is to leave the enclosure, it must be shielded and the shield(s) clamped to the drive using the grounding bracket as shown in Figure 4-29. Remove the outer insulating cover of the cable to ensure the shield(s) make contact with the bracket, but keep the shield(s) intact until as close as possible to the terminals

Alternatively, wiring may be passed through a ferrite ring, part no. 3225-1004.

Figure 4-29 Grounding of signal cable shields using the grounding bracket

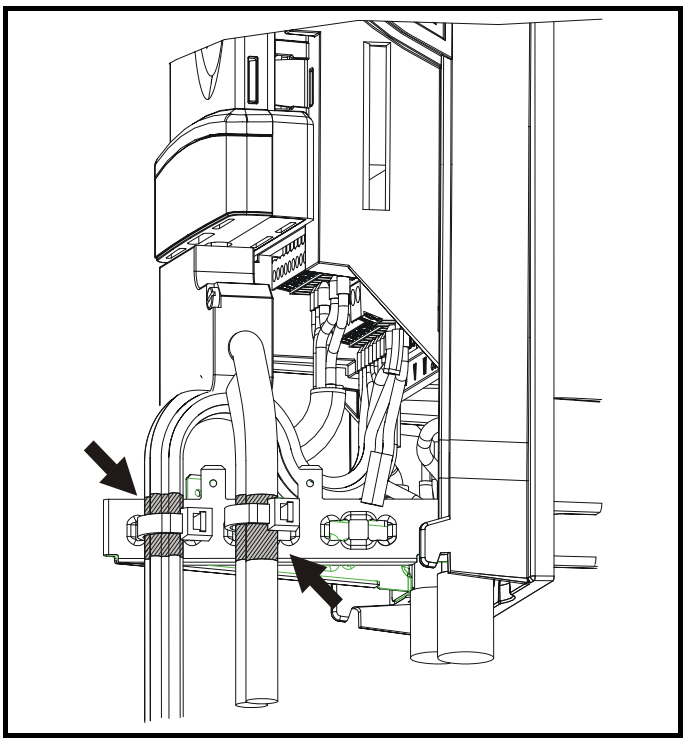

4.10.6 Variations in the EMC wiring

Interruptions to the motor cable

The motor cable should ideally be a single length of shielded or armored cable having no interruptions. In some situations it may be necessary to interrupt the cable, as in the following examples:

- Connecting the motor cable to a terminal block in the drive enclosure
- Installing a motor isolator / disconnect switch for safety when work is done on the motor

In these cases the following guidelines should be followed.

Terminal block in the enclosure

The motor cable shields should be bonded to the back-plate using uninsulated metal cable-clamps which should be positioned as close as possible to the terminal block. Keep the length of power conductors to a minimum and ensure that all sensitive equipment and circuits are at least 0.3m (12 in) away from the terminal block.

Figure 4-30 Connecting the motor cable to a terminal block in the enclosure

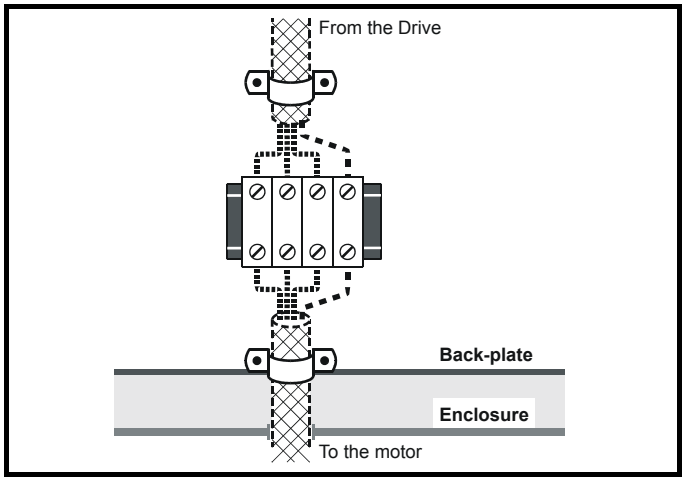

Using a motor isolator / disconnect-switch

The motor cable shields should be connected by a very short conductor having a low inductance. The use of a flat metal coupling-bar is recommended; conventional wire is not suitable.

The shields should be bonded directly to the coupling-bar using uninsulated metal cable-clamps. Keep the length of the exposed power conductors to a minimum and ensure that all sensitive equipment and circuits are at least 0.3m (12 in) away.

The coupling-bar may be grounded to a known low-impedance ground nearby, for example a large metallic structure which is connected closely to the drive ground.

Figure 4-31 Connecting the motor cable to an isolator / disconnect switch

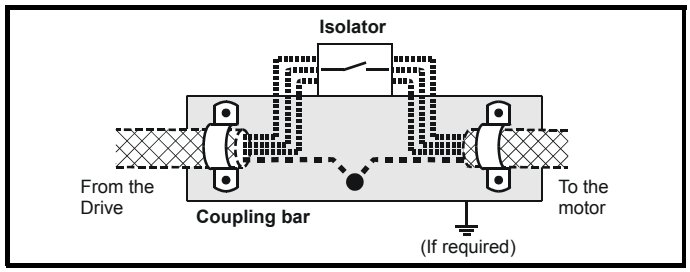

Surge immunity of control circuits - long cables and connections outside a building

The input/output ports for the control circuits are designed for general use within machines and small systems without any special precautions.

These circuits meet the requirements of EN61000-6-2 (1kV surge) provided the 0V connection is not grounded.

In applications where they may be exposed to high-energy voltage surges, some special measures may be required to prevent malfunction or damage. Surges may be caused by lightning or severe power faults in association with grounding arrangements which permit high transient voltages between nominally grounded points. This is a particular risk where the circuits extend outside the protection of a building.

As a general rule, if the circuits are to pass outside the building where the drive is located, or if cable runs within a building exceed 30m, some additional precautions are advisable. One of the following techniques should be used:

1. Galvanic isolation, i.e. do not connect the control 0V terminal to ground. Avoid loops in the control wiring, i.e. ensure every control wire is accompanied by its return (0V) wire.
2. Shielded cable with additional power ground bonding. The cable shield may be connected to ground at both ends, but in addition the ground conductors at both ends of the cable must be bonded together by a power ground cable (equipotential bonding cable) with

cross-sectional area of at least 10mm^2, or 10 times the area of the signal cable shield, or to suit the electrical safety requirements of the plant. This ensures that fault or surge current passes mainly through the ground cable and not in the signal cable shield. If the building or plant has a well-designed common bonded network this precaution is not necessary.

3. Additional over-voltage suppression - for the analog and digital inputs and outputs, a zener diode network or a commercially available surge suppressor may be connected in parallel with the input circuit as shown in Figure 4-32 and Figure 4-33.

If a digital port experiences a severe surge its protective trip may operate (O.Ld1 trip code 26). For continued operation after such an event, the trip can be reset automatically by setting Pr **10.34** to 5.

Figure 4-32 Surge suppression for digital and unipolar inputs and outputs

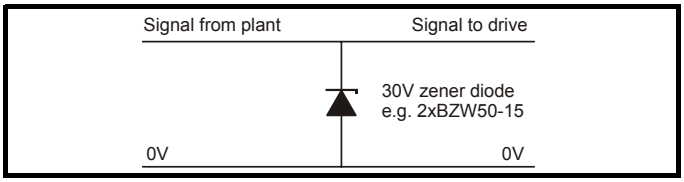

Figure 4-33 Surge suppression for analog and bipolar inputs and outputs

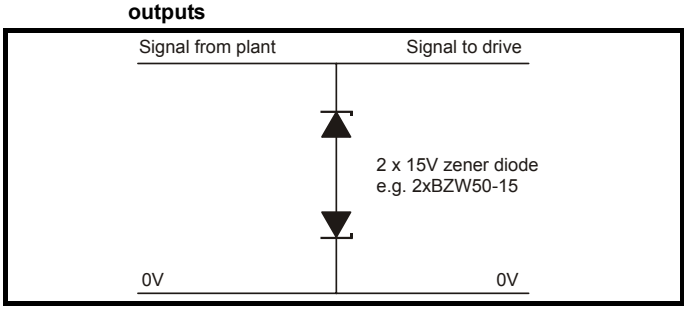

Surge suppression devices are available as rail-mounting modules, e.g. from Phoenix Contact:

Unipolar TT-UKK5-D/24 DC
Bipolar TT-UKK5-D/24 AC

These devices are not suitable for encoder signals or fast digital data networks because the capacitance of the diodes adversely affects the signal. Most encoders have galvanic isolation of the signal circuit from the motor frame, in which case no precautions are required. For data networks, follow the specific recommendations for the particular network.

4.11 PC communications connections

4.11.1 Communications port

The drive has a serial communications port (serial port) as standard supporting 2 wire EIA485 communications. Please see Table 4-15 for the connection details for the RJ45 connector.

Figure 4-34 Location of the RJ45 serial comms connector

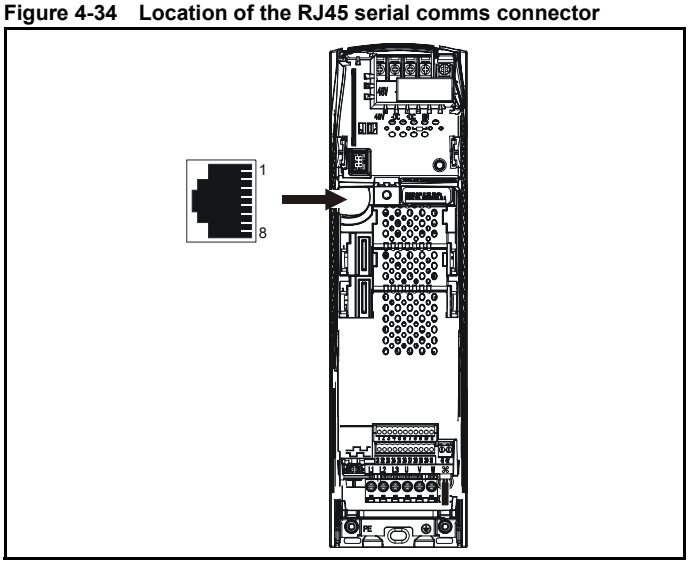

Table 4-15 Connection details for RJ45 connector

Pin	Function
1	120Ω Termination resistor
2	RX TX
3	Isolated 0V
4	+24V (100mA)
5	Isolated 0V
6	TX enable
7	RX\ TX\
8	RX\ TX\ (if termination resistors are required, link to pin 1)
Shell	Isolated 0V

The communications port applies a 2 unit load to the communications network.

Minimum number of connections are 2, 3, 7 and shield. Shielded cable must be used at all times.

4.11.2 Isolation of the communications port

The PC communications port is double insulated and meets the requirements for SELV in EN50178.

WARNING

In order to meet the requirements for SELV in IEC60950 (IT equipment) it is necessary for the control computer to be grounded. Alternatively, when a lap-top or similar device is used which has no provision for grounding, an isolation device must be incorporated in the communications lead.

An isolated serial communications lead has been designed to connect the drive to IT equipment (such as lap-top computers), and is available from the supplier of the drive. See below for details:

Table 4-16 Isolated serial comms lead details

Part number	Description
4500-0087	CT EIA232 Comms cable
4500-0096	CT USB Comms cable

The “isolated serial communications” lead has reinforced insulation as defined in IEC60950 for altitudes up to 3,000m.

NOTE

When using the CT EIA232 Comms cable the available baud rate is limited to 19.2k baud.

4.12 Terminal connections

4.12.1 General

Table 4-17 The terminal connections consist of:

Function	Qty	Control parameters available	Terminal number
Differential analog input	1	Destination, offset, offset trim, invert, scaling	5,6
Single ended analog input	2	Mode, offset, scaling, invert, destination	7,8
Analog output	2	Source, mode, scaling,	9,10
Digital input	3	Destination, invert, logic select	27, 28, 29
Digital input / output	3	Input / output mode select, destination / source, invert, logic select	24, 25, 26
Building automation network	5		35 to 39
Relay	1	Source, invert	41,42
Drive enable	1		31
+10V User output	1		4
+24V User output	1	Source, invert	22
0V common	6		1, 3, 11, 21, 23, 30
+24V External input	1		2

Key:

Destination parameter: indicates the parameter which is being controlled by the terminal / function

Source parameter: indicates the parameter being output by the terminal

Mode parameter: analog - indicates the mode of operation of the terminal, i.e. voltage 0-10V, current 4-20mA etc.

digital - indicates the mode of operation of the terminal, i.e. positive / negative logic (the Drive Enable terminal is fixed in positive logic), open collector.

All analog terminal functions can be programmed in menu 7.

All digital terminal functions (including the relay) can be programmed in menu 8.

The setting of Pr **1.14** and Pr **6.04** can cause the function of digital inputs T25 to T29 to change. For more information, please refer to section 12.21.1 *Reference modes* on page 207.

WARNING

The control circuits are isolated from the power circuits in the drive by basic insulation (single insulation) only. The installer must ensure that the external control circuits are insulated from human contact by at least one layer of insulation (supplementary insulation) rated for use at the AC supply voltage.

WARNING

If the control circuits are to be connected to other circuits classified as Safety Extra Low Voltage (SELV) (e.g. to a personal computer), an additional isolating barrier must be included in order to maintain the SELV classification.

CAUTION

If any of the digital inputs or outputs (including the drive enable input) are connected in parallel with an inductive load (i.e. contactor or motor brake) then suitable suppression (i.e. diode or varistor) should be used on the coil of the load. If no suppression is used then over voltage spikes can cause damage to the digital inputs and outputs on the drive.

CAUTION

Ensure the logic sense is correct for the control circuit to be used. Incorrect logic sense could cause the motor to be started unexpectedly.
Positive logic is the default state for Affinity drive.

NOTE

Any signal cables which are carried inside the motor cable (i.e. motor thermistor, motor brake) will pick up large pulse currents via the cable capacitance. The shield of these signal cables must be connected to ground close to the point of exit of the motor cable, to avoid this noise current spreading through the control system.

NOTE

The drive enable terminal is a positive logic input only. It is not affected by the setting of Pr **8.29** *Positive logic select*.

NOTE

The common 0V from analog signals should, wherever possible, not be connected to the same 0V terminal as the common 0V from digital signals. Terminals 3 and 11 should be used for connecting the 0V common of analog signals and terminals 21, 23 and 30 for digital signals. This is to prevent small voltage drops in the terminal connections causing inaccuracies in the analog signals.

Figure 4-35 Default terminal functions

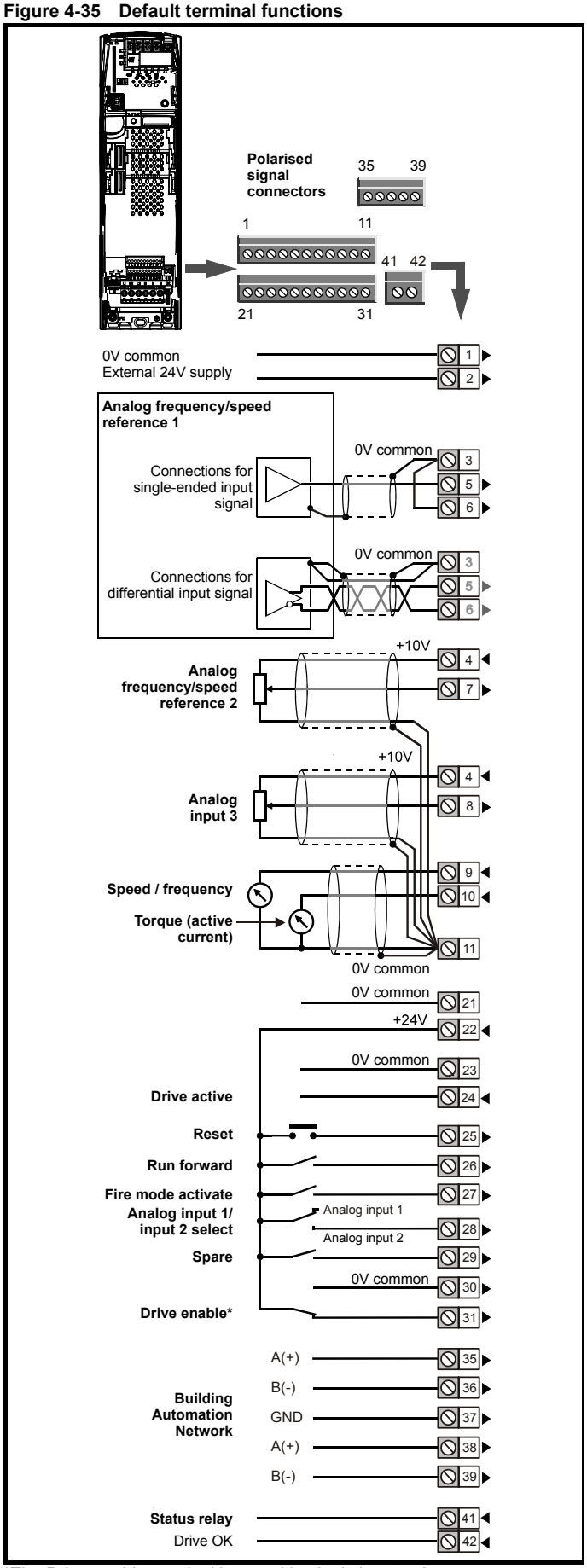

*The Drive enable terminal is a positive logic input only.

4.12.2 Control terminal specification

1	0V common
Function	**Common connection for all external devices**

2	+24V external input
Function	**To supply the control circuit without providing a supply to the power stage**
Nominal voltage	+24.0Vdc
Minimum continuous operating voltage	+19.2Vdc
Maximum continuous operating voltage	+30.0Vdc
Minimum start-up voltage	21.6Vdc
Recommended power supply	60W 24Vdc nominal
Recommended fuse	3A, 50Vdc

3	0V common
Function	**Common connection for all external devices**

4	+10V user output
Function	**Supply for external analog devices**
Voltage tolerance	±1%
Nominal output current	10mA
Protection	Current limit and trip @ 30mA

	Precision reference Analog input 1
5	Non-inverting input
6	Inverting input
Default function	**Frequency/speed reference**
Type of input	Bipolar differential analog (For single-ended use, connect terminal 6 to terminal 3)
Full scale voltage range	±9.8V ±1%
Absolute maximum voltage range	±36V relative to 0V
Working common mode voltage range	±13V relative to 0V
Input resistance	100kΩ ±1%
Resolution	16-bit plus sign (as speed reference)
Monotonic	Yes (including 0V)
Dead band	None (including 0V)
Jumps	None (including 0V)
Maximum offset	700µV
Maximum non linearity	0.3% of input
Maximum gain asymmetry	0.5%
Input filter bandwidth single pole	~1kHz
Sampling period	250µs with destinations as Pr **1.36**, Pr **1.37** or Pr **3.22** in RFC mode. 4ms for open loop mode and all other destinations in RFC mode.

7	Analog input 2
Default function	**Frequency/speed reference**
Type of input	Bipolar single-ended analog voltage or unipolar current
Mode controlled by...	Pr **7.11**
Operating in Voltage mode	
Full scale voltage range	±9.8V ±3%
Maximum offset	±30mV
Absolute maximum voltage range	±36V relative to 0V
Input resistance	>100kΩ
Operating in current mode	
Current ranges	0 to 20mA ±5%, 20 to 0mA ±5%, 4 to 20mA ±5%, 20 to 4mA ±5%
Maximum offset	250µA
Absolute maximum voltage (reverse bias)	−36V max
Absolute maximum current	+70mA
Equivalent input resistance	≤200Ω at 20mA
Common to all modes	
Resolution	10 bit + sign
Sample period	250µs when configured as voltage input with destinations as Pr **1.36**, Pr **1.37**, Pr **3.22** or Pr **4.08** in RFC mode. 4ms for open loop mode, all other destinations in RFC mode or any destination when configured as a current input.

8	Analog input 3
Default function	**Not configured**
Type of input	Bipolar single-ended analog voltage, unipolar current or motor thermistor input
Mode controlled by...	Pr **7.15**
Operating in Voltage mode (default)	
Voltage range	±9.8V ±3%
Maximum offset	±30mV
Absolute maximum voltage range	±36V relative to 0V
Input resistance	>100kΩ
Operating in current mode	
Current ranges	0 to 20mA ±5%, 20 to 0mA ±5%, 4 to 20mA ±5%, 20 to 4mA ±5%
Maximum offset	250µA
Absolute maximum voltage (reverse bias)	−36V max
Absolute maximum current	+70mA
Equivalent input resistance	≤200Ω at 20mA
Operating in thermistor input mode	
Internal pull-up voltage	<5V
Trip threshold resistance	3.3kΩ ±10%
Reset resistance	1.8kΩ ±10%
Short-circuit detection resistance	50Ω ±30%
Common to all modes	
Resolution	10 bit + sign
Sample period	250µs when configured as voltage input with destinations as Pr **1.36**, Pr **1.37**, Pr **3.22** or Pr **4.08** in RFC mode. 4ms for open loop mode, all other destinations in RFC mode or any destination when configured as a current input.

9	Analog output 1
10	Analog output 2
Terminal 9 default function	**OL> Motor FREQUENCY output signal CL> SPEED output signal**
Terminal 10 default function	**Motor active current**
Type of output	Bipolar single-ended analog voltage or unipolar single ended current
Mode controlled by...	Pr **7.21** and Pr **7.24**
Operating in Voltage mode (default)	
Voltage range	±9.6V ±5%
Maximum offset	100mV
Maximum output current	±10mA
Load resistance	1kΩ min
Protection	35mA max. Short circuit protection
Operating in current mode	
Current ranges	0 to 20mA ±10% 4 to 20mA ±10%
Maximum offset	600µA
Maximum open circuit voltage	+15V
Maximum load resistance	500Ω
Common to all modes	
Resolution	10-bit (plus sign in voltage mode)
Update period	250µs when configured as a high speed output with sources as Pr **4.02**, Pr **4.17** in all modes or Pr **3.02**, Pr **5.03** in RFC mode. 4ms when configured as any other type of output or with all other sources.

11	0V common
Function	**Common connection for all external devices**

21	0V common
Function	**Common connection for all external devices**

22	+24V user output (selectable)
Terminal 22 default function	**+24V user output**
Programmability	Can be switched on or off to act as a fourth digital output (positive logic only) by setting the source Pr **8.28** and source invert Pr **8.18**
Nominal output current	200mA (including all digital I/O)
Maximum output current	240mA (including all digital I/O)
Protection	Current limit and trip

23	0V common
Function	**Common connection for all external devices**

24	**Digital I/O 1**
25	**Digital I/O 2**
26	**Digital I/O 3**

Terminal 24 default function	**DRIVE ACTIVE output**
Terminal 25 default function	**DRIVE RESET input**
Terminal 26 default function	**RUN FORWARD input**
Type	Positive or negative logic digital inputs, positive or negative logic push-pull outputs or open collector outputs
Input / output mode controlled by...	Pr **8.31**, Pr **8.32** and Pr **8.33**
Operating as an input	
Logic mode controlled by...	Pr **8.29**
Absolute maximum applied voltage range	±30V
Impedance	6kΩ
Input thresholds	10.0V ±0.8V
Operating as an output	
Open collector outputs selected	Pr **8.30**
Nominal maximum output current	200mA (total including terminal 22)
Maximum output current	240mA (total including terminal 22)
Common to all modes	
Voltage range	0V to +24V
Sample / Update period	250µs when configured as an input with destinations as Pr **6.35** or Pr **6.36**. 600µs when configured as an input with destination as Pr **6.29**. 4ms in all other cases.

27	**Digital Input 4**
28	**Digital Input 5**
29	**Digital Input 6**

Terminal 27 default function	**FIRE MODE ACTIVATE input**
Terminal 28 default function	**Analog INPUT 1 / INPUT 2 select**
Terminal 29 default function	**Unassigned input**
Type	Negative or positive logic digital inputs
Logic mode controlled by...	Pr **8.29**
Voltage range	0V to +24V
Absolute maximum applied voltage range	±30V
Impedance	6kΩ
Input thresholds	10.0V ±0.8V
Sample / Update period	250µs with destinations as Pr **6.35** or Pr **6.36**. 600µs with destination as Pr **6.29**. 4ms in all other cases.

30	**0V common**
Function	**Common connection for all external devices**

31	**Drive enable**
Type	Positive logic only digital input
Voltage range	0V to +24V
Absolute maximum applied voltage	±30V
Thresholds	15.5V ±2.5V
Response time	Nominal: 8ms Maximum: 20ms

41 **42**	**Relay contacts**
Default function	**Drive OK indicator**
Contact voltage rating	240Vac, Installation over-voltage category II
Contact maximum current rating	2A AC 240V 4A DC 30V resistive load 0.5A DC 30V inductive load (L/R = 40ms)
Contact minimum recommended rating	12V 100mA
Contact type	Normally open
Default contact condition	Closed when power applied and drive OK
Update period	4ms

WARNING

A fuse or other over-current protection should be installed to the relay circuit.

4.13 Building automation network connections

35	**Previous node A(+)**
36	**Previous node B (-)**
37	**Isolated ground**
38	**Next node A(+)**
39	**Next node B(-)**
Cable specification	Shielded twisted pair
	Characteristic impedance: 100 to 130Ω
	Capacitance between conductors: <100 pF
	Maximum length: 1200m with AWG 18 cable
Termination resistor	120Ω

Figure 4-36 Multi-drop connection

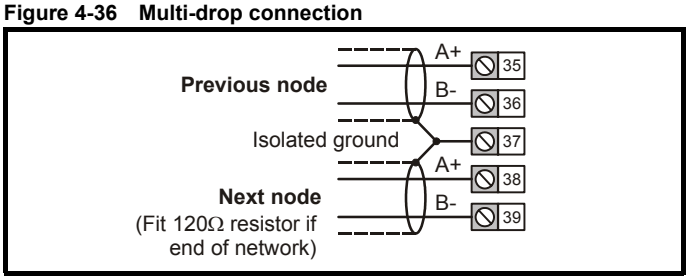

4.14 Heatsink fan supply connections (size 4 to 6)

52 **53** **54** **55**	**Heatsink fan connections**
No user connections	

4.14.1 Heatsink fan supply connections (size 6 only)

60 **61** **62** **63**	**No connection**
No user connections	

64	**0V**
65	**24V heatsink fan supply**

Function	**To provide the power supply to the heatsink mounted fan**
Nominal voltage	24Vdc
Minimum continuous operating voltage	23.5V
Maximum continuous operating voltage	27V
Current consumption	3.3A
Recommended power supply	24V, 100W, 4.5A
Recommended fuse	4A fast blow (I^2t less than $20A^2s$)

5 Getting Started

This chapter introduces the user interfaces, menu structure and security level of the drive.

5.1 Understanding the display

There is one keypad available for the Affinity. The BA-Keypad has an LCD display and is installed on the drive as standard.

5.1.1 BA-Keypad (LCD)

The display consists of three lines of text.

The top line shows the drive status or the current menu and parameter number being viewed on the left, and the parameter value or the specific trip type on the right.

The lower two lines show the parameter name or the help text.

Figure 5-1 BA-Keypad

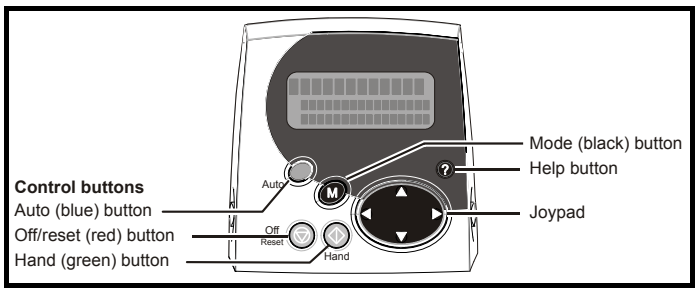

NOTE The red off button is also used to reset the drive.

The Keypad can indicate when a SMARTCARD access is taking place or when the second motor map is active (menu 21). These are indicated on the displays as follows.

	Keypad
SMARTCARD access taking place	The symbol 'CC' will appear in the lower left hand corner of the display
Second motor map active	The symbol 'Mot2' will appear in the lower left hand corner of the display

5.2 Keypad operation

5.2.1 Control buttons

The keypad consists of:

1. Joypad - used to navigate the parameter structure and change parameter values.
2. Mode button - used to change between the display modes – parameter view, parameter edit, status.
3. Three control buttons - used to select Hand / Off / Auto modes
4. Help button - displays text briefly describing the selected parameter.

The Help button toggles between other display modes and parameter help mode. The up and down functions on the joypad scroll the help text to allow the whole string to be viewed. The right and left functions on the joypad have no function when help text is being viewed.

Figure 5-2 Display modes

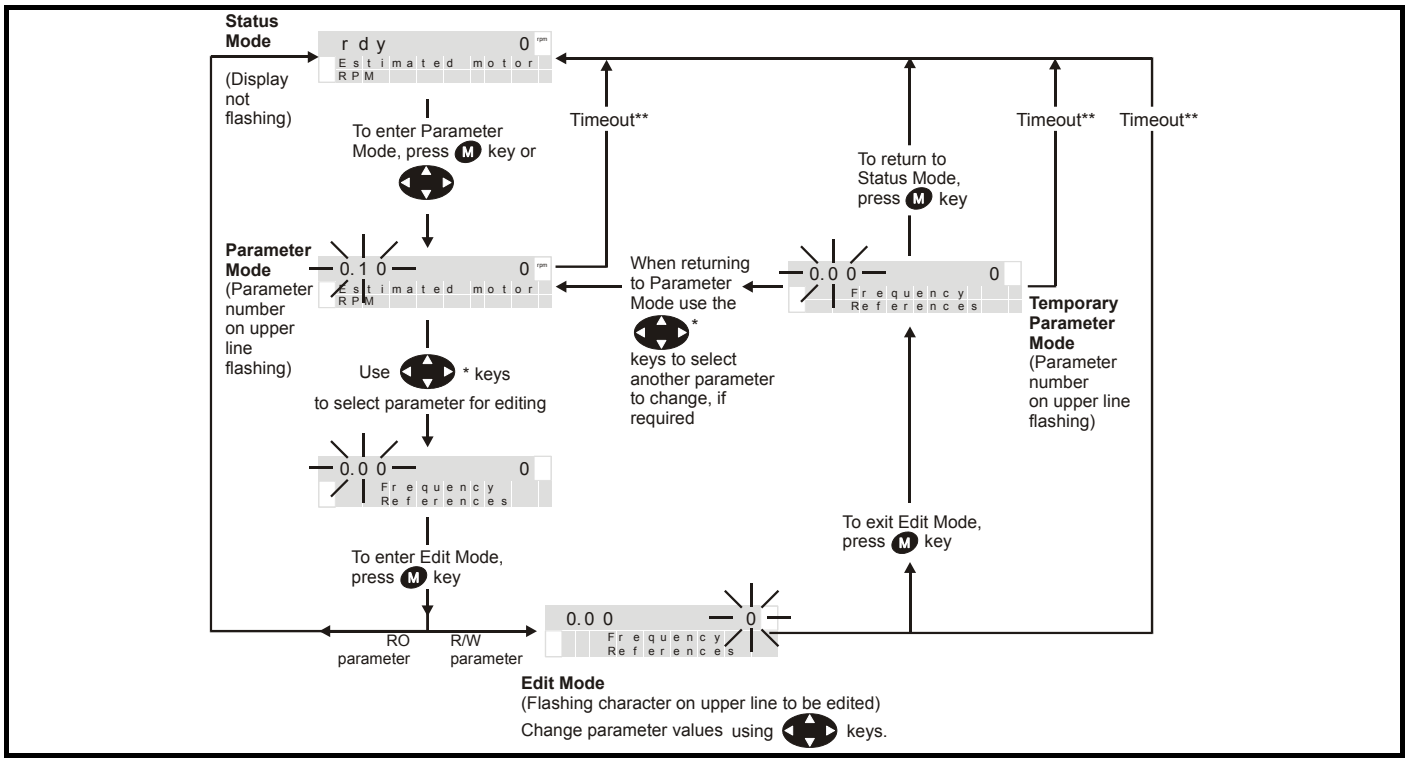

* can only be used to move between menus if L2 access has been enabled (Pr **0.49**). Refer to section 5.10 on page 81.
Timeout defined by Pr **11.41 (default value = 240s).

Figure 5-3 Mode examples

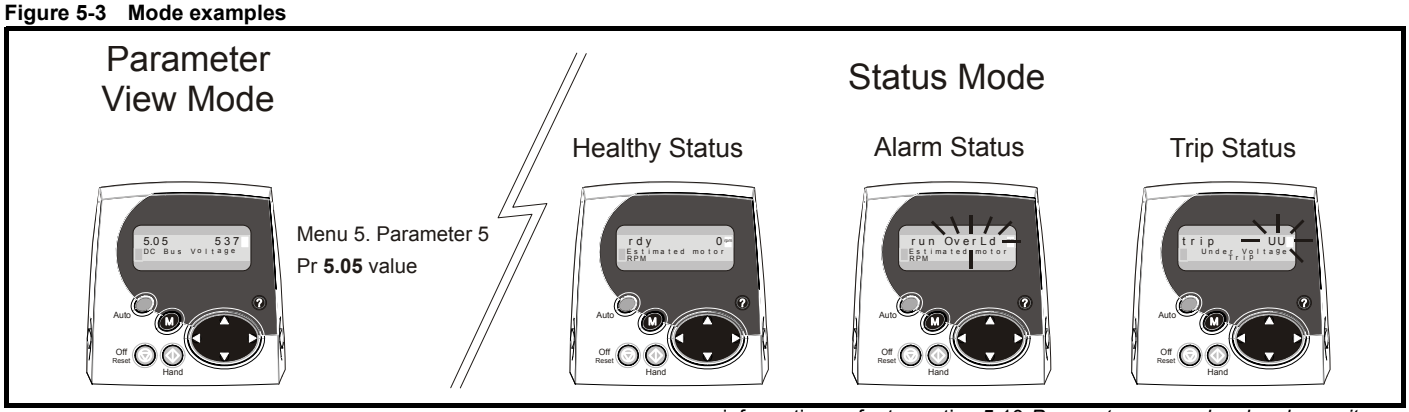

WARNING Do not change parameter values without careful consideration; incorrect values may cause damage or a safety hazard.

NOTE
When changing the values of parameters, make a note of the new values in case they need to be entered again.

NOTE
For new parameter-values to apply after the AC supply to the drive is interrupted, new values must be saved. Refer to section 5.8 *Saving parameters* on page 81.

5.3 Menu structure

The drive parameter structure consists of menus and parameters.

The drive initially powers up so that only menu 0 can be viewed. The up and down arrow buttons are used to navigate between parameters and once level 2 access (L2) has been enabled (see Pr **0.49**) the left and right buttons are used to navigate between menus. For further information, refer to section 5.10 *Parameter access level and security* on page 81.

Figure 5-4 Parameter navigation

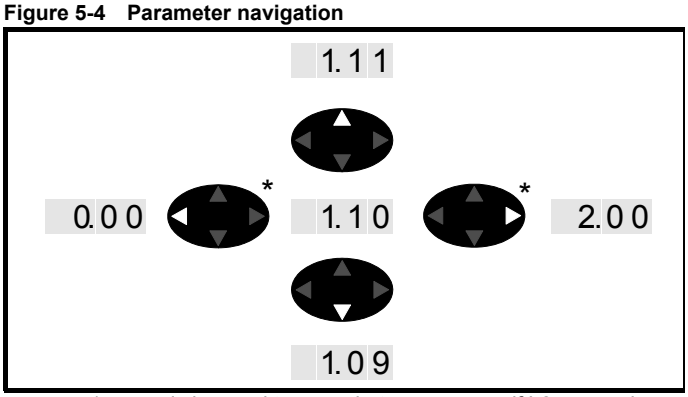

* can only be used to move between menus if L2 access has been enabled (Pr **0.49**). Refer to section 5.10 *Parameter access level and security* on page 81.

The menus and parameters roll over in both directions.

i.e. if the last parameter is displayed, a further press will cause the display to rollover and show the first parameter.

When changing between menus the drive remembers which parameter was last viewed in a particular menu and thus displays that parameter.

Figure 5-5 Menu structure

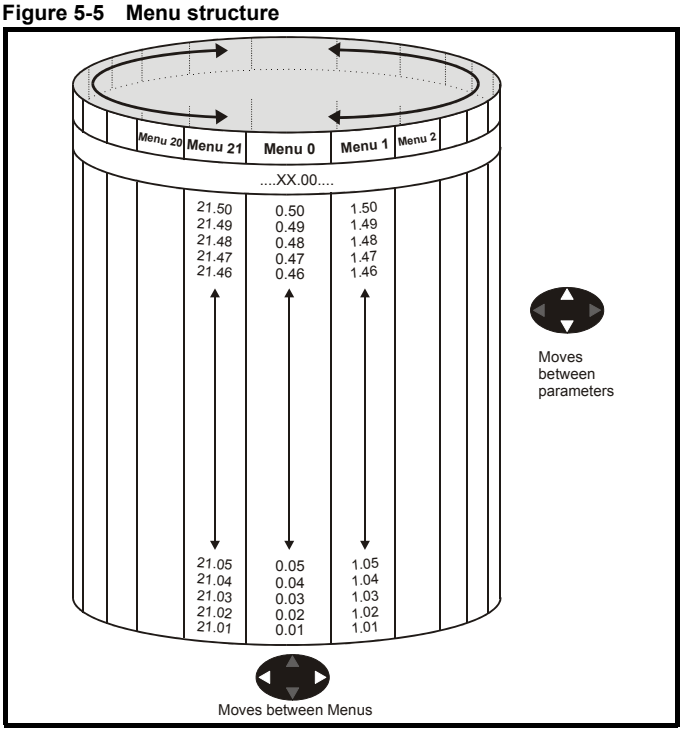

5.4 Menu 0

Menu 0 is used to bring together various commonly used parameters for basic easy set up of the drive.
Appropriate parameters are copied from the advanced menus into menu 0 and thus exist in both locations.

For further information, refer to Chapter 6 *Basic parameters* on page 85.

Figure 5-6 Menu 0 copying

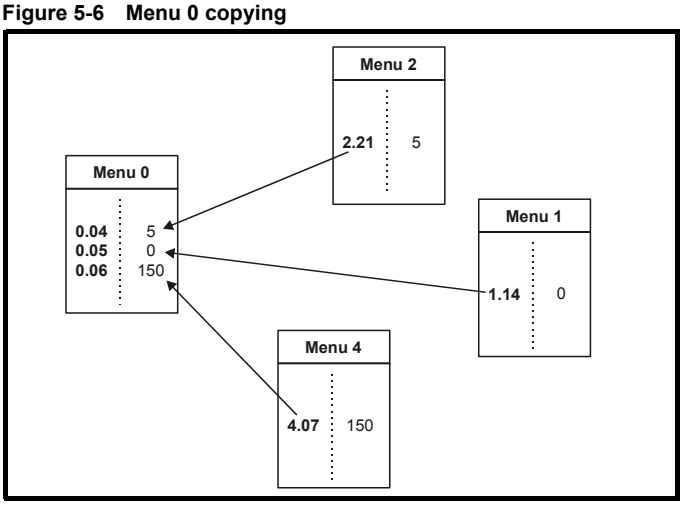

5.5 Advanced menus

The advanced menus consist of groups or parameters appropriate to a specific function or feature of the drive.

Table 5-1 Advanced menu descriptions

Menu	Description
0	Commonly used basic set up parameters for quick / easy programming
1	Frequency / speed reference
2	Ramps
3	Slave frequency, speed feedback and speed control
4	Torque and current control
5	Motor control
6	Sequencer and clock
7	Analog I/O
8	Digital I/O
9	Programmable logic, motorized pot and binary sum
10	Status and trips
11	General drive set-up
12	Threshold detectors and variable selectors
14	User PID controller
15, 16	Solutions Module set-up
17	Building automation network
18	Application menu 1
19	Application menu 2
20	Application menu 3
21	Second motor parameters
22	Additional Menu 0 set-up
40	Keypad configuration menu
41	User filter menu

5.5.1 Keypad set-up menus

Table 5-2 Menu 40 parameter descriptions

Parameter		Range(⇳)
40.00	Parameter 0	0 to 32767
40.01	Language selection	English (0), Custom (1), French (2), German (3), Spanish (4), Italian (5)
40.02	Software version	999999
40.03	Save to flash	Idle (0), Save (1), Restore (2), Default (3)
40.04	LCD contrast	0 to 31
40.05	Drive and attribute database upload was bypassed	Updated (0), Bypass (1)
40.06	Browsing favourites control	Normal (0), Filter (1)
40.07	Keypad security code	0 to 999
40.08	Communication channel selection	Disable (0), Slot1 (1), Slot2 (2), Slot3 (3), Slave (4), Direct (5)
40.09	Hardware key code	0 to 999
40.10	Drive node ID (Address)	0 to 255
40.11	Flash ROM memory size	4Mbit (0), 8Mbit (1)
40.18	Assistance on action threshold parameter	0 to 499.99
40.19	String database version number	0 to 999999
40.20	Screen saver strings and enable	None (0), Default (1), User (2)
40.21	Screen saver interval	0 to 600
40.22	Turbo browse time interval	0 to 200ms

Table 5-3 Menu 41 parameter descriptions

Parameter		Range(⇳)
41.00	Parameter 0	0 to 32767
41.01 to 41.50	Browsing filter source F01 to F50	Pr **0.00** to Pr **391.51**
41.51	Browsing favourites control	Normal (0), Filter (1)

5.5.2 Display messages

The following tables indicate the various possible mnemonics which can be displayed by the drive and their meaning.

Trip types are not listed here but can be found in Chapter 6 *Basic parameters* on page 85 if required.

Table 5-4 Alarm indications

Lower display	Description
br.rS	Braking resistor overload
Braking resistor I^2t accumulator (Pr **10.37**) in the drive has reached 75.0% of the value at which the drive will trip and the braking IGBT is active.	
Hot	Heatsink or control board or inverter IGBT over temperature alarms are active
• The drive heatsink temperature has reached a threshold and the drive will trip 'Oh2' if the temperature continues to rise (see the 'Oh2' trip). or • The ambient temperature around the control PCB is approaching the over temperature threshold (see the 'O.CtL' trip).	
OVLd	Motor overload
The motor I^2t accumulator in the drive has reached 75% of the value at which the drive will be tripped and the load on the drive is >100%	
Auto tune	Autotune in progress
The autotune procedure has been initialised. 'Auto' and 'tunE' will flash alternatively on the display.	
Lt	Limit switch is active
Indicates that a limit switch is active and that it is causing the motor to be stopped (i.e. forward limit switch with forward reference etc.)	
PLC	Onboard PLC program is running
An Onboard PLC program is installed and running. The display will flash 'PLC' once every 10s.	

Table 5-5 Status indications

Upper display	Description	Drive output stage
ACUU	AC Supply loss	Enabled
The drive has detected that the AC supply has been lost and is attempting to maintain the DC bus voltage by decelerating the motor.		
Auto	Auto mode	Enabled
The drive is running in Auto mode		
dc	DC applied to the motor	Enabled
The drive is applying DC injection braking.		
dEC	Decelerating	Enabled
The drive is decelerating the motor.		
Hand	Hand mode	Enabled
The drive is running in Hand mode		
Heat	Motor pre-heat	Enabled
Motor pre-heat active		
inh	Inhibit	Disabled
The drive is inhibited and cannot be run. The drive enable signal is not applied to terminal 31 or Pr **6.15** is set to 0.		
Off	Drive is stopped	Disabled
Drive is stopped		
run	Drive running	Enabled
Drive is running with Hand / Off / Auto functions disabled		
rdY	Ready	Disabled
The drive is ready to be run.		
StoP	Stop or holding zero speed	Enabled
The drive is holding zero speed.		
triP	Trip condition	Disabled
The drive has tripped and is no longer controlling the motor. The trip code appears on the right hand side of the top row of the display.		

Table 5-6 Solutions Module and SMARTCARD status indications on power-up

Lower display	Description
boot	
A parameter set is being transferred from the SMARTCARD to the drive during power-up. For further information, please refer to section 10.2.4 *Booting up from the SMARTCARD on every power up (Pr 11.42 = boot (4))* on page 127.	
cArd	
The drive is writing a parameter set to the SMARTCARD during power-up. For further information, please refer to section 10.2.3 *Auto saving parameter changes (Pr 11.42 = Auto (3))* on page 126.	
loAding	
The drive is writing information to a Solutions Module.	

5.6 Changing the operating mode

Changing the operating mode returns all parameters to their default value, including the motor parameters. (Pr **0.49** *Security status* and Pr **0.34** *User security code* are not affected by this procedure.)

Procedure

Use the following procedure only if a different operating mode is required:

1. Ensure the drive is not enabled, i.e. terminal 31 is open or Pr **6.15** is Off (0)
2. Enter either of the following values in Pr **xx.00**, as appropriate:
   1253 (EUR, 50Hz AC supply frequency)
   1254 (USA, 60Hz AC supply frequency)
3. Change the setting of Pr **0.48** as follows:

The figures in the second column apply when serial communications are used.

4. Either:

- Press the red reset button
- Toggle the reset digital input
- Carry out a drive reset through serial communications by setting Pr **10.38** to 100 (ensure that Pr. **xx.00** returns to 0).

NOTE

Entering 1253 or 1254 in Pr **xx.00** will only load defaults if the setting of Pr **0.48** has been changed.

5.7 Changing the keypad mode

The keypad mode can be selected for Hand, Off or Auto by using the keypad buttons

- Blue - Auto
- Red - Off
- Green - Hand

In Hand mode, the motor speed is adjusted by pressing the keypad up/down arrow buttons. If Hand mode is selected from Auto mode then the transition is bumpless, so the motor speed will not change.

In Auto mode, the motor speed control reference is determined by the value set in the speed/frequency reference selector Pr **0.05**.

In Off mode, the motor will be stopped but pressing the keypad up/down arrow buttons will allow the keypad control reference Pr **1.17** to be adjusted. Selecting Hand mode will then ramp the motor up to the selected speed.

5.8 Saving parameters

When changing a parameter in Menu 0, the new value is saved when pressing the M Mode button to return to parameter view mode from parameter edit mode.

If parameters have been changed in the advanced menus, then the change will not be saved automatically. A save function must be carried out.

Procedure

Enter 1000* in Pr. **xx.00**

Either:

- Press the red reset button
- Toggle the reset digital input
- Carry out a drive reset through serial communications by setting Pr **10.38** to 100 (ensure that Pr. **xx.00** returns to 0).

*If the drive is in the under voltage trip state or is being supplied from a low voltage DC supply, a value of 1001 must be entered into Pr **xx.00** to perform a save function.

5.9 Restoring parameter defaults

Restoring parameter defaults by this method saves the default values in the drive's memory. (Pr **0.49** and Pr **0.34** are not affected by this procedure.)

Procedure

1. Ensure the drive is not enabled, i.e. terminal 31 is open or Pr **6.15** is Off (0)
2. Enter 1233 (EUR 50Hz settings) or 1244 (USA 60Hz settings) in Pr **xx.00**.
3. Either:

- Press the red reset button
- Toggle the reset digital input
- Carry out a drive reset through serial communications by setting Pr **10.38** to 100 (ensure that Pr. **xx.00** returns to 0).

5.10 Parameter access level and security

The parameter access level determines whether the user has access to menu 0 only or to all the advanced menus (menus 1 to 22) in addition to menu 0.

The User Security determines whether the access to the user is read only or read write.

Both the User Security and Parameter Access Level can operate independently of each other as shown in the table below:

Parameter Access Level	User Security	Menu 0 status	Advanced menus status
L1	Open	RW	Not visible
L1	Closed	RO	Not visible
L2	Open	RW	RW
L2	Closed	RO	RO

RW = Read / write access RO = Read only access

The default settings of the drive are Parameter Access Level L1 and user Security Open, i.e. read / write access to Menu 0 with the advanced menus not visible.

5.10.1 Access Level

The access level is set in Pr **0.49** and allows or prevents access to the advanced menu parameters.

L1 access selected - Menu 0 only visible

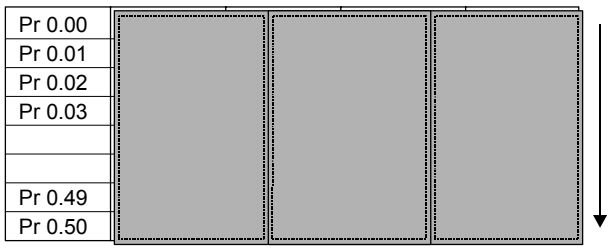

L2 access selected - All parameters visible

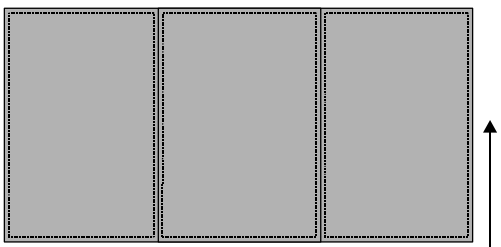

Pr 0.00	Pr 1.00	.....	Pr 21.00	Pr 22.00
Pr 0.01	Pr 1.01	.....	Pr 21.01	Pr 22.01
Pr 0.02	Pr 1.02	.....	Pr 21.02	Pr 22.02
Pr 0.03	Pr 1.03	.....	Pr 21.03	Pr 22.03
		.....		
		.....		
Pr 0.49	Pr 1.49	.....	Pr 21.30	Pr 22.28
Pr 0.50	Pr 1.50	.....	Pr 21.31	Pr 22.29

5.10.2 Changing the Access Level

The Access Level is determined by the setting of Pr **0.49** as follows:

String	Value	Effect
L1	0	Access to menu 0 only
L2	1	Access to all menus (menu 0 to menu 22)

The Access Level can be changed through the keypad even if the User Security has been set.

5.10.3 User Security

The User Security, when set, prevents write access to any of the parameters (other than Pr. **0.49** and Pr **11.44** *Access Level*) in any menu.

User security open - All parameters: Read / Write access

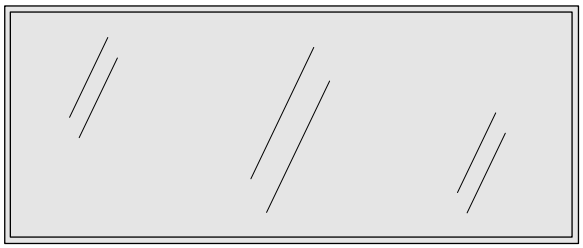

Pr 0.00	Pr 1.00	.....	Pr 21.00	Pr 22.00
Pr 0.01	Pr 1.01	.....	Pr 21.01	Pr 22.01
Pr 0.02	Pr 1.02	.....	Pr 21.02	Pr 22.02
Pr 0.03	Pr 1.03	.....	Pr 21.03	Pr 22.03
		.....		
		.....		
Pr 0.49	Pr 1.49	.....	Pr 21.30	Pr 22.28
Pr 0.50	Pr 1.50	.....	Pr 21.31	Pr 22.29

User security closed - All parameters: Read Only access (except Pr **0.49** and Pr **11.44**)

Pr 0.00	Pr 1.00	.....	Pr 21.00	Pr 22.00
Pr 0.01	Pr 1.01	.....	Pr 21.01	Pr 22.01
Pr 0.02	Pr 1.02	.....	Pr 21.02	Pr 22.02
Pr 0.03	Pr 1.03	.....	Pr 21.03	Pr 22.03
		.....		
		.....		
Pr 0.49	Pr 1.49	.....	Pr 21.30	Pr 22.28
Pr 0.50	Pr 1.50	.....	Pr 21.31	Pr 22.29

Setting User Security

Enter a value between 1 and 999 in Pr **0.34** and press the M button; the security code has now been set to this value. In order to activate the security, the Access level must be set to Loc in Pr **0.49**. When the drive is reset, the security code will have been activated and the drive returns to Access Level L1. The value of Pr **0.34** will return to 0 in order to hide the security code. At this point, the only parameter that can be changed by the user is the Access Level Pr **0.49**.

Unlocking User Security

Select a read write parameter to be edited and press the M button, the display will now show CodE. Use the arrow buttons to set the security code and press the M button.

With the correct security code entered, the display will revert to the parameter selected in edit mode.

If an incorrect security code is entered the display will revert to parameter view mode.

To lock the User Security again, set Pr **0.49** to Loc and press the reset button.

Disabling User Security

Unlock the previously set security code as detailed above. Set Pr **0.34** to 0 and press the M button. The User Security has now been disabled, and will not have to be unlocked each time the drive is powered up to allow read / write access to the parameters.

5.11 Displaying parameters with non-default values only

By entering 12000 in Pr **xx.00**, the only parameters that will be visible to the user will be those containing a non-default value. This function does not require a drive reset to become active. In order to deactivate this function, return to Pr **xx.00** and enter a value of 0.

Please note that this function can be affected by the access level enabled, refer to section 5.10 *Parameter access level and security* for further information regarding access level.

5.12 Displaying destination parameters only

By entering 12001 in Pr **xx.00**, the only parameters that will be visible to the user will be destination parameters. This function does not require a drive reset to become active. In order to deactivate this function, return to Pr **xx.00** and enter a value of 0.

Please note that this function can be affected by the access level enabled, refer to section 5.10 *Parameter access level and security* for further information regarding access level.

5.13 Communications

5.13.1 Introduction

The Affinity has a PC communications interface and a Building Automation Network interface. The PC communications interface enables all drive set-up, operation and monitoring to be carried out with a PC or controller if required. Therefore, it is possible to control the drive entirely by serial communications without the need for a BA-keypad or other control cabling. The PC communications interface supports two protocols selected by parameter configuration:

- Modbus RTU
- CT ANSI

Modbus RTU has been set as the default protocol, as it is used with the PC-tools commissioning/start-up software as provided on the CD ROM.

The PC communications port of the drive is a RJ45 socket, which is isolated from the power stage and the other control terminals (see section 4.11 *PC communications connections* on page 71 for connection and isolation details).

The communications port applies a 2 unit load to the communications network.

USB/EIA232 to EIA485 Communications

An external USB/EIA232 hardware interface such as a PC cannot be used directly with the 2-wire PC communications interface of the drive. Therefore a suitable converter is required.

Suitable USB to EIA485 and EIA232 to EIA485 isolated converters are available from Control Techniques as follows:

- CT USB Comms cable (CT Part No. 4500-0096)
- CT EIA232 Comms cable (CT Part No. 4500-0087)

When using one of the above converters or any other suitable converter with the Affinity, it is recommended that no terminating resistors be connected on the network. It may be necessary to 'link out' the terminating resistor within the converter depending on which type is used. The information on how to link out the terminating resistor will normally be contained in the user information supplied with the converter.

The Building Automation Network enables connection to a building automation system using the following protocols:

- Modbus RTU slave
- BACnet master and slave

5.13.2 Building automation network communications set-up parameters

17.03	MAC/Node Address								
RW	Uni							US	
⇳	0 to 65535				⇨	1			

		Allowable MAC Address Values		
Protocol	**Master/ Slave**	**Minimum**	**Maximum**	**Broadcast**
Modbus RTU	Slave	1	247	0
BACnet*	Master	0	127	255

If a MAC address is selected that is greater than that allowed by the currently selected protocol then the actual address used will be the maximum valid address value.

*The Affinity drive is a BACnet master device and as such will instigate I-Am messages onto the BACnet network. These messages allow other BACnet master devices to determine the capabilities of the Affinity drive.

17.04	Baud rate								
RW	Uni							US	
⇳	0 to 127				⇨	0			

This selects the baud rate used for network communication.

Pr 17.04 value	Baud rate (bps)
0	Protocol default value (see table below)
1	1200
2	2400
3	4800
4	9600
5	19200
6	38400
7	57600
8	76800
>8	Protocol default value (see table below)

The default value when Pr **17.04** is set to 0 or >8 is as follows:

Protocol	Default baud rate (bps)
Modbus RTU	19200
BACnet	9600

17.05	Building Automation Network protocol								
RW	Uni							US	
⇳	0 to 65535				⇨	0			

This selects the protocol used for the Building Automation Network as follows:

17.05	Protocol
0	Disabled
1	Modbus RTU
2	BACnet

If a value greater than 2 is entered for Pr **17.05** then the Building Automation Network is disabled.

17.10	Device Object Identifier								
RW	Bi							US	
⇳	-32767 to 32767				⇨	0			

BACnet

If this parameter is zero then the MAC/Node address selected in Pr **xx.03** will be used as the object identifier for the BACnet device; otherwise the device object identifier will be the value specified here.

If the node address is also set to zero then the Device Object Identifier value will be set to 1.

17.38	Data format								
RW	Uni							US	
⇳	0 to 255				⇨	0			

This selects the data transmission format used for the selected protocol.

17.38	Description			
	Start bits	**Data bits**	**Parity**	**Stop bits**
0	Protocol default value (see table below)			
1	1	8	None	1
2	1	8	None	2
3	1	8	Even	1
4	1	8	Odd	1
>4	Protocol default value (see table below)			

The default value when Pr **17.38** is set to 0 or >4 is as follows::

Protocol	Description			
	Start bits	**Data bits**	**Parity**	**Stop bits**
Modbus RTU	1	8	None	2
BACnet	1	8	None	2

5.13.3 PC communications set-up parameters

The following parameters need to be set according to the system requirements.

0.35 {11.24}	PC comms mode								
RW	Txt							US	
⇳	AnSI (0) rtU (1)				⇨	rtU (1)			

This parameter defines the communications protocol used by the 485 comms port on the drive. This parameter can be changed via the drive keypad, via a Solutions Module or via the comms interface itself. If it is changed via the comms interface, the response to the command uses the original protocol. The master should wait at least 20ms before send a new message using the new protocol. (Note: ANSI uses 7 data bits, 1 stop bit and even parity; Modbus RTU uses 8 data bits, 2 stops bits and no parity.)

Comms value	String	Communications mode
0	AnSI	ANSI
1	rtU	Modbus RTU protocol
2	Lcd	Modbus RTU protocol, but with an Keypad only

ANSIx3.28 protocol
Full details of the CT ANSI communications protocol are the *Advanced User Guide*.

Modbus RTU protocol
Full details of the CT implementation of Modbus RTU are given in the *Advanced User Guide*.

Modbus RTU protocol, but with an Keypad only
This setting is used for disabling communications access when the BA-Keypad is used as a hardware key. See the *Advanced User Guide* for more details.

0.36 {11.25}	**PC comms baud rate**								
RW	Txt							US	
⇳	300 (0), 600 (1), 1200 (2), 2400 (3), 4800 (4), 9600 (5), 19200 (6), 38400 (7), 57600 (8)*, 115200 (9)*				⇨	19200 (6)			

* only applicable to Modbus RTU mode

This parameter can be changed via the drive keypad, via a Solutions Module or via the comms interface itself. If it is changed via the comms interface, the response to the command uses the original baud rate. The master should wait at least 20ms before sending a new message using the new baud rate.

NOTE
When using the CT EIA232 Comms cable the available baud rate is limited to 19.2k baud.

0.37 {11.23}	**PC comms address**								
RW	Txt							US	
⇳	0 to 247				⇨	1			

Used to define the unique address for the drive for the serial interface. The drive is always a slave.

Modbus RTU
When the Modbus RTU protocol is used addresses between 0 and 247 are permitted. Address 0 is used to globally address all slaves, and so this address should not be set in this parameter

ANSI
When the ANSI protocol is used the first digit is the group and the second digit is the address within a group. The maximum permitted group number is 9 and the maximum permitted address within a group is 9. Therefore, Pr **0.37** is limited to 99 in this mode. The value 00 is used to globally address all slaves on the system, and x0 is used to address all slaves of group x, therefore these addresses should not be set in this parameter.

6 Basic parameters

Menu 0 is used to bring together various commonly used parameters for basic easy set up of the drive. All the parameters in menu 0 appear in other menus in the drive (denoted by {…}).

Menus 11 and 22 can be used to change most of the parameters in menu 0. Menu 0 can also contain up to 59 parameters by setting up menu 22.

6.1 Single line descriptions

Parameter			Range(⇳)		Default(⇨)	
			OL	RFC	OL	RFC
0.00	**xx.00**	{**x.00**}	0 to 32,767		0	
0.01	Minimum reference clamp	{**1.07**}	±3,000.0Hz	±SPEED_LIMIT_ MAX Hz/rpm	0.0	
0.02	Maximum reference clamp	{**1.06**}	0 to 3,000.0Hz	SPEED_LIMIT_ MAX Hz/rpm	EUR> 50.0 USA> 60.0	EUR> 1,500.0 USA> 1800.0
0.03	Acceleration rate	{**2.11**}	0.0 to 3,200.0 s/100Hz	0.000 to 3,200.000 s/1,000rpm	EUR> 40.0 USA> 33.3	EUR> 13.333 USA> 11.111
0.04	Deceleration rate	{**2.21**}	0.0 to 3,200.0 s/100Hz	0.000 to 3,200.000 s/1,000rpm	EUR> 40.0 USA> 33.3	EUR> 13.333 USA> 11.111
0.05	Reference select	{**1.14**}	A1.A2 (0), A1.Pr (1), A2.Pr (2), Pr (3), PAd (4), Prc (5)		A1.A2 (0)	
0.06	Current limit	{**4.07**}	0 to CURRENT_LIMIT_MAX %		113	114
0.07	OL> Voltage mode select	{**5.14**}	Ur_S (0), Ur (1), Fd (2), Ur_Auto (3), Ur_I (4), SrE (5)		Ur_I (4)	
	CL> Speed controller P gain	{**3.10**}		0.0000 to 6.5535 1/rad s^{-1}		0.0300
0.08	OL> Voltage boost	{**5.15**}	0.0 to 25.0% of motor rated voltage		Size 1 to 3: 3.0 Size 4 & 5: 2.0 Size 6: 1.0	
	CL> Speed controller I gain	{**3.11**}		0.00 to 655.35 1/rad		0.10
0.09	OL> Dynamic V/F	{**5.13**}	OFF (0) or On (1)		OFF (0)	
	CL> Speed controller D gain	{**3.12**}		0.00000 to 0.65535 (s)		0.00000
0.10	OL> Estimated motor speed	{**5.04**}	±180,000 rpm			
	CL> Motor speed	{**3.02**}		±SPEED_MAX rpm		
0.11	Drive output frequency	{**5.01**}	±SPEED_FREQ_MAX Hz	±1250 Hz		
0.12	Total motor current	{**4.01**}	0 to DRIVE_CURRENT_MAX A			
0.13	Percentage load	{**4.20**}	±USER_CURRENT_MAX %			
0.14	Ramp mode select	{**2.04**}	FASt (0) Std (1) Std.hV (2)	FASt (0) Std (1)	Std (1)	
0.15	Sleep/wake threshold	{**6.53**}	±SPEED_FREQ_MAX Hz/rpm			
0.16	Sleep/wake delay time	{**6.54**}	0.0 to 250.0 s		10.0	
0.17	CL> Current demand filter 1	{**4.12**}		0.0 to 25.0 ms		0.0
0.18	Spin start boost	{**5.40**}	0.0 to 10.0		1.0	
0.19	Analog input 2 mode	{**7.11**}	0-20 (0), 20-0 (1), 4-20tr (2), 20-4tr (3), 4-20 (4), 20-4 (5), VOLt (6)		4-20 (4)	
0.20	Analog input 2 destination	{**7.14**}	Pr **0.00** to Pr **21.51**		Pr **1.37**	
0.21	Analog input 3 mode	{**7.15**}	0-20 (0), 20-0 (1), 4-20tr (2), 20-4tr (3), 4-20 (4), 20-4 (5), VOLt (6), th.SC (7), th (8), th.diSp (9)		VOLt (6)	
0.22	Date	{**6.16**}	0 to 311299			
0.23	Time	{**6.17**}	0.00 to 23.59			
0.24	Date/Time selector	{**6.19**}	0 to 5		3	
0.25	Date format	{**6.20**}	Std (0), Std.ds (1), US (2), US.ds (3)		EUR> 0 (Std), USA> US (2)	
0.26	Low load detection level	{**4.27**}	0.0 to 100.0 %		0.0	
0.27	Low load detection speed / frequency threshold	{**4.28**}	0.0 to +SPEED_FREQ_MAX Hz/rpm		0.0	
0.28	Trip on abnormal load detection	{**4.29**}	OFF (0) or On (1)		OFF (0)	
0.29	SMARTCARD parameter data	{**11.36**}	0 to 999		0	
0.30	Parameter cloning	{**11.42**}	nonE (0), rEAd (1), Prog (2), AutO (3), boot (4)		nonE (0)	
0.31	Drive rated voltage	{**11.33**}	200 (0), 400 (1), 575 (2), 690 (3) V			
0.32	Drive current scaling	{**11.32**}	0.00 to 9999.99A			
0.33	Catch a spinning motor	{**6.09**}	0 to 3	0 to 1	0	1
0.34	User security code	{**11.30**}	0 to 999		0	
0.35	PC comms mode	{**11.24**}	AnSI (0), rtU (1), Lcd (2)		rtU (1)	
0.36	PC comms baud rate	{**11.25**}	300 (0), 600 (1), 1200 (2), 2400 (3), 4800 (4), 9600 (5), 19200 (6), 38400 (7), 57600 (8) Modbus RTU only, 115200 (9) Modbus RTU only		19200 (6)	
0.37	PC comms address	{**11.23**}	0 to 247		1	
0.38	Hold zero speed / Motor pre-heat enable	{**6.08**}	OFF (0) or On (1)		OFF (0)	
0.39	Motor pre-heat current magnitude	{**6.52**}	0 to 100 %		0	
0.40	Autotune	{**5.12**}	0 to 2	0 to 4	0	

Parameter			Range(⇳)		Default(⇨)	
			OL	RFC	OL	RFC
0.41	Maximum switching frequency	{**5.18**}	3 (0), 4 (1), 6 (2), 8 (3), 12 (4), 16 (5) kHz		3 (0)	
0.42	No. of motor poles	{**5.11**}	0 to 60 (Auto to 120 pole)		0 (Auto)	
0.43	Motor rated power factor	{**5.10**}	0.000 to 1.000		0.850	
0.44	Motor rated voltage	{**5.09**}	0 to AC_VOLTAGE_SET_MAX V		200V drive: 230 400V drive: EUR> 400, USA> 460 575V drive: 575 690V drive: 690	
0.45	Motor rated full load speed (rpm)	{**5.08**}	0 to 180,000 rpm	0.00 to 40,000.00 rpm	EUR> 1,500 USA> 1,800	EUR> 1,450.00 USA> 1,770.00
0.46	Motor rated current	{**5.07**}	0 to RATED_CURRENT_MAX A		Drive rated current [**11.32**]	
0.47	Rated frequency	{**5.06**}	0 to 3,000.0 Hz	0 to 1,250.0 Hz	EUR> 50.0 USA> 60.0	
0.48	Operating mode selector	{**11.31**}	OPEn LP (1), RFC (2),		OPEn LP (1)	RFC (2)
0.49	Security status	{**11.44**}	L1 (0), L2 (1), Loc (2)			
0.50	Software version	{**11.29**}	1.00 to 99.99			
0.51	Positive logic select	{**8.29**}	OFF (0) or On (1)		On (1)	
0.52	Timer 1 start date	{**9.35**}	0 to 311299		0	
0.53	Timer 1 start time	{**9.36**}	0.00 to 23.59		0.00	
0.54	Timer 1 stop date	{**9.37**}	0 to 311299		0	
0.55	Timer 1 stop time	{**9.38**}	0.00 to 23.59		0.00	
0.56	Timer 1 repeat function	{**9.39**}	0 to 6		0	
0.57	Timer 1 enable	{**9.40**}	OFF (0) or On (1)		OFF (0)	
0.58	Timer 1 destination	{**9.43**}	0.00 to 50.99		0.00	

* Modes 1 and 2 are not user saved, Modes 0, 3 and 4 are user saved

Key:

Coding	Attribute
OL	Open loop
RFC	RFC mode

Figure 6-1 Menu 0 logic diagram

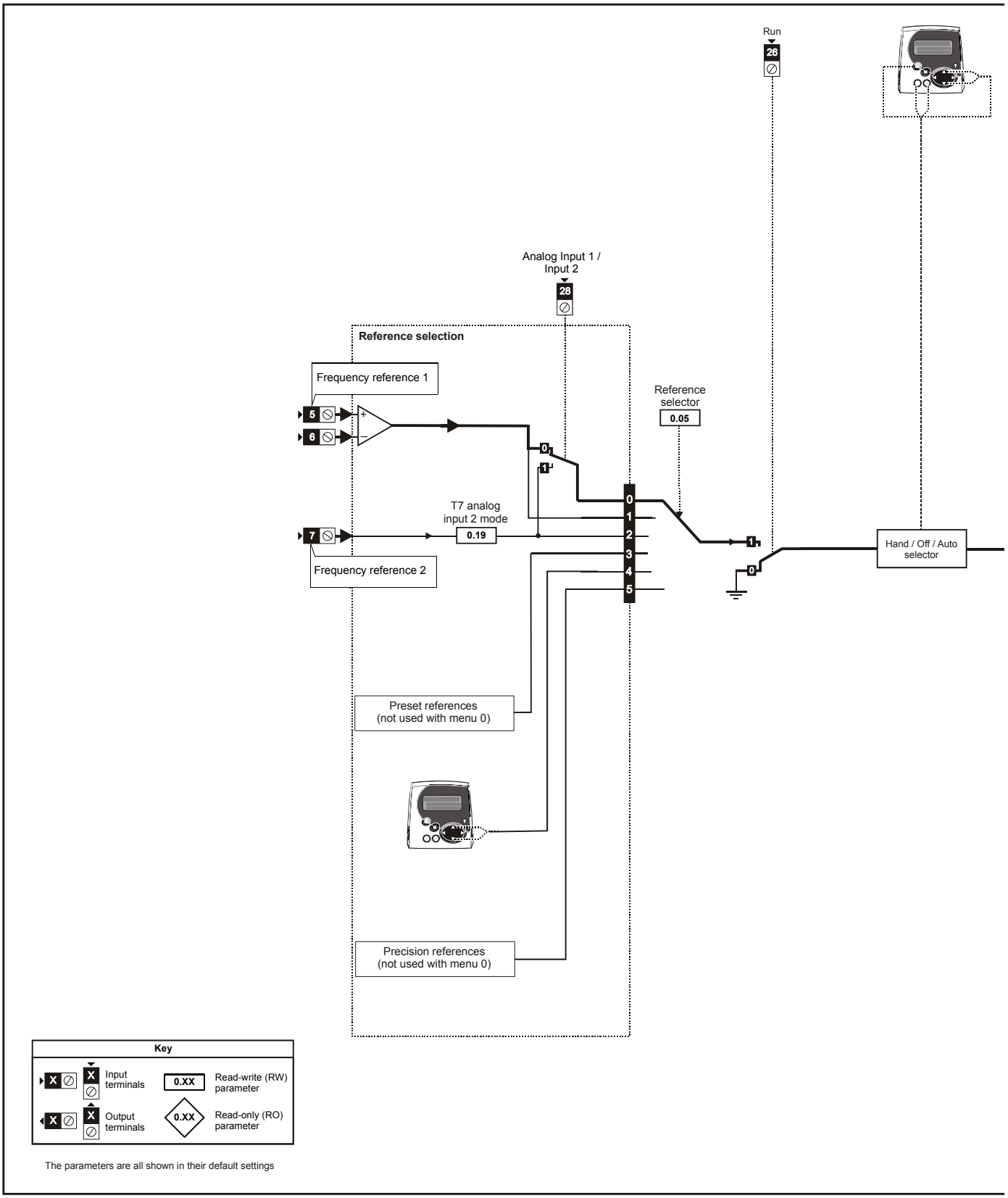

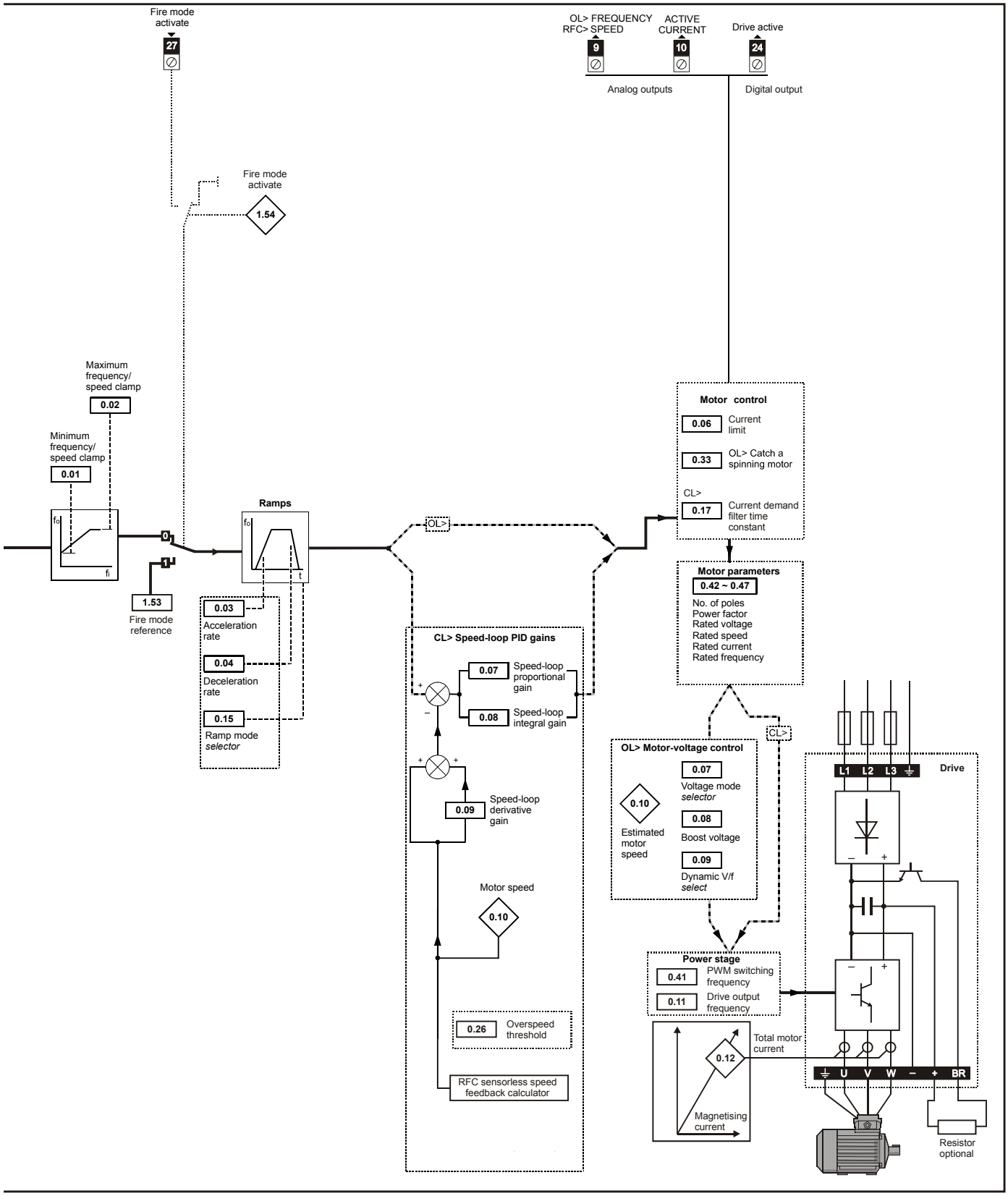
Fire mode activate
27
OL> FREQUENCY
RFC> SPEED
9
ACTIVE CURRENT
10
Drive active
24
Analog outputs
Digital output
Fire mode activate
1.54
Maximum frequency/ speed clamp
0.02
Minimum frequency/ speed clamp
0.01
Ramps
1.53
Fire mode reference
0.03
Acceleration rate
0.04
Deceleration rate
0.15
Ramp mode selector
OL>
CL>
Motor control
0.06
Current limit
0.33
OL> Catch a spinning motor
0.17
Current demand filter time constant
Motor parameters
0.42 ~ 0.47
No. of poles
Power factor
Rated voltage
Rated speed
Rated current
Rated frequency
CL> Speed-loop PID gains
0.07
Speed-loop proportional gain
0.08
Speed-loop integral gain
0.09
Speed-loop derivative gain
Motor speed
0.10
0.26
Overspeed threshold
RFC sensorless speed feedback calculator
OL> Motor-voltage control
0.10
Estimated motor speed
0.07
Voltage mode selector
0.08
Boost voltage
0.09
Dynamic V/f select
Power stage
0.41
PWM switching frequency
0.11
Drive output frequency
0.12
Total motor current
Magnetising current
Drive
L1 L2 L3
U V W – + BR
Resistor optional

6.2 Full descriptions

6.2.1 Parameter x.00

0.00 {x.00}	Parameter zero									
RW	Uni									
⇳	0 to 32,767					⇨	0			

Pr **x.00** is available in all menus and has the following functions.

Value	Action
1000	Save parameters when under voltage is not active (Pr **10.16** = 0) and low voltage DC supply is not active (Pr **6.44** = 0).
1001	Save parameters under all conditions
1070	Reset all option modules
1233	Load standard defaults
1244	Load US defaults
1253	Change drive mode with standard defaults
1254	Change drive mode with US defaults
1255	Change drive mode with standard defaults (excluding menus 15 to 20)
1256	Change drive mode with US defaults (excluding menus 15 to 20)
2001*	Transfer drive parameters as difference from default to a bootable SMARTCARD block in data block number 001
3yyy*	Transfer drive EEPROM data to a SMART Card block number yyy
4yyy*	Transfer drive data as difference from defaults to SMART Card block number yyy
5yyy*	Transfer drive ladder program to SMART Card block number yyy
6yyy*	Transfer SMART Card data block number yyy to the drive
7yyy*	Erase SMART Card data block number yyy
8yyy*	Compare drive parameters with SMART Card data block number yyy
9555*	Clear SMARTCARD warning suppression flag
9666*	Set SMARTCARD warning suppression card
9777*	Clear SMARTCARD read-only flag
9888*	Set SMARTCARD read-only flag
9999*	Erase SMARTCARD data block 1 to 499
12000**	Display non-default values only
12001**	Display destination parameters only

* See Chapter 10 *SMARTCARD operation* on page 125 for more information of these functions.

** These functions do not require a drive reset to become active. All other functions require a drive reset to initiate the function.

6.2.2 Speed limits

0.01 {1.07}	Minimum reference clamp									
RW	Bi							PT	US	
OL	⇳	±3,000.0Hz				⇨	0.0			
RFC	⇳	±SPEED_LIMIT_MAX Hz/rpm				⇨	0.0			

(When the drive is jogging, [**0.01**] has no effect.)

Open-loop

Set Pr **0.01** at the required minimum output frequency of the drive for both directions of rotation. The drive speed reference is scaled between Pr **0.01** and Pr **0.02**. [**0.01**] is a nominal value; slip compensation may cause the actual frequency to be higher.

RFC

Set Pr **0.01** at the required minimum motor speed for both directions of rotation. The drive speed reference is scaled between Pr **0.01** and Pr **0.02**.

0.02 {1.06}	Maximum reference clamp									
RW	Uni								US	
OL	⇳	0 to 3,000.0Hz				⇨	EUR> 50.0 USA> 60.0			
RFC	⇳	SPEED_LIMIT_MAX Hz/rpm				⇨	EUR> 1,500.0 USA> 1,800.0			

(The drive has additional over-speed protection.)

Open-loop

Set Pr **0.02** at the required maximum output frequency for both directions of rotation. The drive speed reference is scaled between Pr **0.01** and Pr **0.02**. [**0.02**] is a nominal value; slip compensation may cause the actual frequency to be higher.

RFC

Set Pr **0.02** at the required maximum motor speed for both directions of rotation. The drive speed reference is scaled between Pr **0.01** and Pr **0.02**.

For operating at high speeds see section 9.5 *High speed operation* on page 124.

6.2.3 Ramps, speed reference selection, current limit

0.03 {2.11}	Acceleration rate									
RW	Uni								US	
OL	⇳	0.0 to 3,200.0 s/100Hz				⇨	EUR> 40.0 USA> 33.3			
RFC	⇳	0.000 to 3,200.000 s/1,000rpm				⇨	EUR> 13.333 USA> 11.111			

Set Pr **0.03** at the required rate of acceleration.

Note that larger values produce lower acceleration. The rate applies in both directions of rotation.

0.04 {2.21}	Deceleration rate									
RW	Uni								US	
OL	⇳	0.0 to 3,200.0 s/100Hz				⇨	EUR> 40.0 USA> 33.3			
RFC	⇳	0.000 to 3,200.000 s/1,000rpm				⇨	EUR> 13.333 USA> 11.111			

Set Pr **0.04** at the required rate of deceleration.

Note that larger values produce lower deceleration. The rate applies in both directions of rotation.

0.05 {1.14}	Reference selector									
RW	Txt						NC		US	
⇳	0 to 5					⇨	A1.A2 (0)			

Use Pr **0.05** to select the required frequency/speed reference as follows:

Setting		
A1.A2	0	Analog input 1 OR analog input 2 selectable by digital input, terminal 28
A1.Pr	1	Analog input 1 OR preset frequency/speed selectable by digital input, terminal 28 and 29
A2.Pr	2	Analog input 2 OR preset frequency/speed selectable by digital input, terminal 28 and 29
Pr	3	Pre-set frequency/speed
PAd	4	Keypad reference
Prc	5	Precision reference

Setting Pr **0.05** to 1, 2 or 3 will re-configure T28 and T29. Refer to Pr **8.39** to disable this function.

0.06 {4.07}	Current Limit									
RW	Uni				RA			US		
⇳	0 to Current_limit_max %			⇨	OL	113				
					RFC	114				

Pr **0.06** limits the maximum output current of the drive (and hence maximum motor torque) to protect the drive and motor from overload.

Set Pr **0.06** at the required maximum torque as a percentage of the rated torque of the motor, as follows:

$$[\mathbf{0.06}] = \frac{T_R}{T_{RATED}} \times \mathbf{100\ (\%)}$$

Where:

T_R Required maximum torque

T_{RATED} Motor rated torque

Alternatively, set 0.06 at the required maximum active (torque-producing) current as a percentage of the rated active current of the motor, as follows:

$$[\mathbf{0.06}] = \frac{I_R}{I_{RATED}} \times \mathbf{100\ (\%)}$$

Where:

I_R Required maximum active current

I_{RATED} Motor rated active current

6.2.4 Voltage boost, (open-loop), Speed-loop PID gains (RFC)

0.07 {5.14}	Voltage mode selector									
RW	Txt							US		
OL	⇳	Ur_S (0), Ur (1), Fd (2), Ur_Auto (3), Ur_I (4), SrE (5)			⇨	Ur_I (4)				

Open-loop

There are six voltage modes available, which fall into two categories, vector control and fixed boost. For further details, refer to section *Pr 0.07 {5.14} Voltage mode* on page 119.

0.07 {3.10}	Speed controller proportional gain									
RW	Uni							US		
RFC	⇳	0.0000 to 6.5535 1/rad s^{-1}			⇨	0.0300				

RFC

Pr **0.07** (**3.10**) operates in the feed-forward path of the speed-control loop in the drive. See Figure 12-4 on page 150 for a schematic of the speed controller. For information on setting up the speed controller gains, refer to Chapter 9 *Optimisation* on page 118.

0.08 {5.15}	Low frequency voltage boost									
RW	Uni							US		
OL	⇳	0.0 to 25.0% of motor rated voltage			⇨	Size 1 to 3: 3.0 Size 4 & 5: 2.0, Size 6: 1.0				

Open-loop

When **0.07** *Voltage mode selector* is set at **Fd** or **SrE**, set Pr **0.08** (**5.15**) at the required value for the motor to run reliably at low speeds.

Excessive values of Pr **0.08** can cause the motor to be overheated.

0.08 {3.11}	Speed controller integral gain									
RW	Uni							US		
RFC	⇳	0.00 to 655.35 1/rad			⇨	0.10				

RFC

Pr **0.08** (**3.11**) operates in the feed-forward path of the speed-control loop in the drive. See Figure 12-4 on page 150 for a schematic of the speed controller. For information on setting up the speed controller gains, refer to Chapter 9 *Optimisation* on page 118.

0.09 {5.13}	Dynamic V/F / flux optimise select									
RW	Bit							US		
OL	⇳	OFF (0) or On (1)			⇨	OFF (0)				

Open-loop

Set Pr **0.09** (**5.13**) at 0 when the V/f characteristic applied to the motor is to be fixed. It is then based on the rated voltage and frequency of the motor.

Set Pr **0.09** at 1 when reduced power dissipation is required in the motor when it is lightly loaded. The V/f characteristic is then variable resulting in the motor voltage being proportionally reduced for lower motor currents. Figure 6-2 shows the change in V/f slope when the motor current is reduced.

Figure 6-2 Fixed and variable V/f characteristics

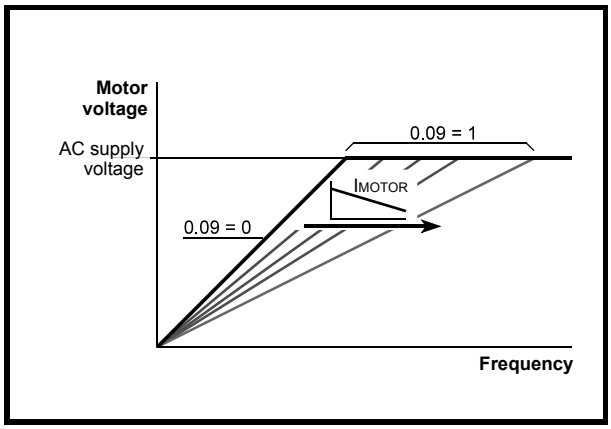

0.09 {3.12}	Speed controller differential feedback gain									
RW	Uni							US		
RFC	⇳	0.00000 to 0.65535(s)			⇨	0.00000				

RFC

Pr **0.09** (**3.12**) operates in the feedback path of the speed-control loop in the drive. See Figure 12-4 on page 150 for a schematic of the speed controller. For information on setting up the speed controller gains, refer to Chapter 9 *Optimisation* on page 118.

6.2.5 Monitoring

0.10 {5.04}	Estimated motor speed									
RO	Bit	FI					NC	PT		
OL	⇳	±180,000 rpm			⇨					

Open-loop

Pr **0.10** (**5.04**) indicates the value of motor speed that is estimated from the following:

0.12 *Post-ramp frequency reference*
0.42 *Motor - no. of poles*

0.10 {3.02}	Motor speed								
RO	Bi	FI				NC	PT		
RFC	⇳	±Speed_max rpm	⇨						

RFC

Pr **0.10** (**3.02**) indicates the value of motor speed that is obtained from the speed estimator.

0.11 {5.01}	Drive output frequency								
RO	Bi	FI				NC	PT		
OL	⇳	±SPEED_FREQ_MAX Hz	⇨						
RFC	⇳	±1250.0 Hz	⇨						

Pr **0.11** displays the frequency at the drive output.

0.12 {4.01}	Total motor current								
RO	Uni	FI				NC	PT		
⇳	0 to Drive_current_max A	⇨							

Pr **0.12** displays the rms value of the output current of the drive in each of the three phases. The phase currents consist of an active component and a reactive component, which can form a resultant current vector as shown in the following diagram.

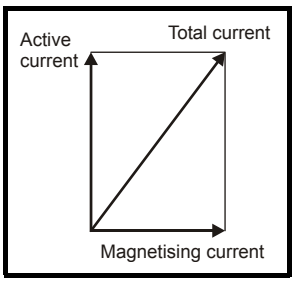

The active current is the torque producing current and the reactive current is the magnetising or flux-producing current.

0.13 {4.20}	Percentage load								
RO	Uni	FI				NC	PT		
⇳	±USER_CURRENT_MAX %	⇨							

6.2.6 Ramp mode and Stop mode selectors

0.14 {2.04}	Ramp mode select								
RW	Txt							US	
OL	⇳	FASt (0) Std (1) Std.hV (2)	⇨	Std (1)					
RFC	⇳	FASt (0) Std (1)	⇨						

Pr **0.15** sets the ramp mode of the drive as shown below:

0: Fast ramp

Fast ramp is used where the deceleration follows the programmed deceleration rate subject to current limits. This mode must be used if a braking resistor is connected to the drive.

1: Standard ramp

Standard ramp is used. During deceleration, if the voltage rises to the standard ramp level (Pr **2.08**) it causes a controller to operate, the output of which changes the demanded load current in the motor. As the controller regulates the link voltage, the motor deceleration increases as the speed approaches zero speed. When the motor deceleration rate reaches the programmed deceleration rate the controller ceases to operate and the drive continues to decelerate at the programmed rate. If the standard ramp voltage (Pr **2.08**) is set lower than the nominal DC bus level the drive will not decelerate the motor, but it will coast to rest. The output of the ramp controller (when active) is a current demand that is fed to the frequency changing current controller (Open-loop modes) or the torque producing current controller (RFC mode). The gain of these controllers can be modified with Pr **4.13** and Pr **4.14**.

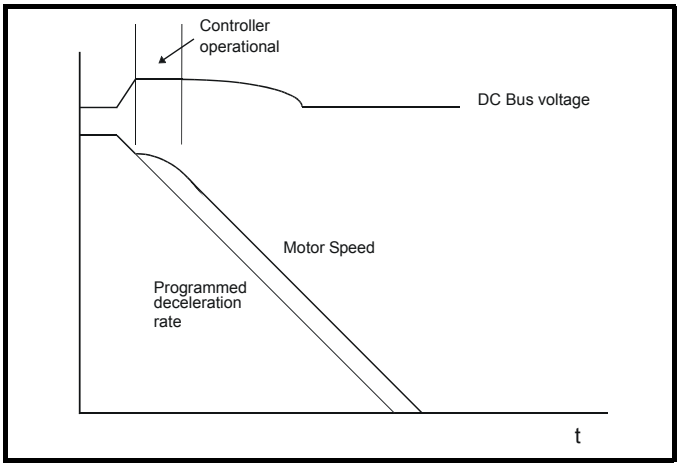

2: Standard ramp with motor voltage boost

This mode is the same as normal standard ramp mode except that the motor voltage is boosted by 20%. This increases the losses in the motor, dissipating some of the mechanical energy as heat giving faster deceleration.

6.2.7 Sleep/wake mode

0.15 {6.53}	Sleep/wake threshold								
RW	Uni							US	
⇳	±SPEED_FREQ_MAX Hz/rpm	⇨	10.0						

0.16 {6.54}	Sleep/wake delay time								
RW	Uni							US	
⇳	0.0 to 250.0 s	⇨	10.0						

Sleep/wake mode automatically stops the motor if it is running at a low and inefficient speed. It is enabled when Pr **0.15** is set to a non zero value and activated when the absolute value of the frequency/speed reference Pr **1.01** remains below the sleep threshold Pr **0.15** for the time period set in Pr **0.16**.

When sleep/wake mode is activated, the internal drive run command is removed and the motor stops. The motor restarts when Pr **1.01** remains above the sleep threshold Pr **0.15** for the time period set in Pr **0.16**.

If the PID functions are being used then sleep mode can be delayed by setting the PID pre-boost level (Pr **14.28**) and maximum boost time (Pr **14.29**) to non-zero values.

Sleep/wake mode cannot be activated when the keypad reference mode is selected (i.e. Pr **1.49** = 4).

If bipolar mode is disabled (i.e. Pr **1.10** = 0), then negative values of the reference selected (Pr **1.01**) are treated as zero when compared to the sleep threshold.

6.2.8 Current demand filter

0.17 {4.12}	Current demand filter time constant								
RW	Uni							US	
RFC	⇳	0.0 to 25.0 ms			⇨	0.0			

RFC

A first order filter, with a time constant defined by Pr **0.17**, is provided on the current demand to reduce acoustic noise and vibration produced as a result of position feedback quantisation noise. The filter introduces a lag in the speed loop, and so the speed loop gains may need to be reduced to maintain stability as the filter time constant is increased.

6.2.9 Spin start boost

0.18 {5.40}	Spin start boost								
RW	Uni							US	
⇳	0.0 to 10.0				⇨	1.0			

If Pr **0.33** is set to a non zero value, then Pr **0.18** defines a scaling function used by the algorithm that detects the speed of the motor. It is likely that for smaller motors the default value of 1.0 is suitable, but for larger motors this parameter may need to be increased. If the value of Pr **0.18** is too large then the motor may accelerate from standstill when the drive is enabled. If the value of Pr **0.18** is too small then the drive will detect the motor speed as zero even if the motor is spinning.

6.2.10 Analog input

0.19 {7.11}	Analog input 2 mode								
RW	Txt							US	
⇳	0 to 6				⇨	4-20 (4)			

In modes 2 & 3 a current loop loss trip is generated if the current falls below 3mA.

In modes 2 & 4 the analog input level goes to 0.0% if the input current falls below 4mA.

Pr value	Pr string	Mode	Comments
0	0-20	0 - 20mA	
1	20-0	20 - 0mA	
2	4-20.tr	4 - 20mA with trip on loss	Trip if I < 3mA
3	20-4.tr	20 - 4mA with trip on loss	Trip if I < 3mA
4	4-20	4 - 20mA with no trip on loss	0.0% if I ≤ 4mA
5	20-4	20 – 4mA with no trip on loss	100% if I ≤ 4mA
6	VOLt	Voltage mode	

0.20 {7.14}	Analog input 2 destination								
RW	Uni		DE				PT	US	
⇳	Pr **0.00** to Pr **21.51**				⇨	Pr **1.37**			

Pr **0.20** sets the destination of analog input 2.

0.21 {7.15}	Analog input 3 mode								
RW	Txt						PT	US	
⇳	0 to 9				⇨	VoLt (6)			

In modes 2 & 3 a current loop loss trip is generated if the current falls below 3mA.

In modes 2 & 4 the analog input level goes to 0.0% if the input current falls below 4mA.

Pr value	Pr string	Mode	Comments
0	0-20	0 - 20mA	
1	20-0	20 - 0mA	
2	4-20.tr	4 - 20mA with trip on loss	Trip if I < 3mA
3	20-4.tr	20 - 4mA with trip on loss	Trip if I < 3mA
4	4-20	4 - 20mA with no trip on loss	0.0% if I ≤ 4mA
5	20-4	20 - 4mA with no trip on loss	100% if I ≤ 4mA
6	VOLt	Voltage mode	
7	th.SC	Thermistor mode with short-circuit detection	Th trip if R > 3K3 Th reset if R < 1K8 ThS trip if R < 50R
8	th	Thermistor mode with no short-circuit detection	Th trip if R > 3K3 Th reset if R < 1K8
9	th.diSp	Thermistor mode with display only and no trip	

6.2.11 Real time clock

0.22 {6.16}	Date								
RW	Uni					NC	PT	US	
⇳	0 to 311299				⇨				

0.23 {6.17}	Time								
RW	Uni					NC	PT	US	
⇳	0.00 to 23.59				⇨				

0.24 {6.19}	Date / time selector								
RW	Uni							US	
⇳	0 to 5				⇨	3			

0.25 {6.20}	Date format								
RW	Txt							US	
⇳	Std (0), Std.ds (1), US (2), US.ds (3)				⇨	EUR> Std (0) USA> US (2)			

The value of Pr **0.24** determines the data displayed in Pr **0.22** and Pr **0.23** as shown in the table below:

Pr 0.24	Data displayed in Pr 0.22 and Pr 0.23
0	Drive powered-up time: Date and time starts from zero at each power-up
1	Date and time from real time clock in slot 1 Solutions Module. If the module does not support this feature or no module is installed in slot 1, then the date and time will be zero
2	Date and time from real time clock in slot 2 Solutions Module. If the module does not support this feature or no module is installed in slot 2, then the date and time will be zero
3	Date and time from internal real time clock
4	Drive running time: Time that the drive inverter has been active since it was manufactured
5	Set date and time: Date and time can be adjusted and written to all Solutions Modules installed which support real time clock

Pr **0.22** shows the date in the format ddmmyy (Pr **0.25** = 0 or 1) or mmddyy (Pr **0.25** = 2 or 3). Pr **0.23** shows the time in hh.mm format.

If Pr **0.24** is set to 0 or 4 then the date and time start from zero, the days roll over after 30, and the months roll over after 11.

The day of the week displayed in Pr **6.18** is zero unless Pr **0.24** is set to 1, 2 or 3.

To adjust the date/time, set Pr **0.24** to 5. Enter date/time in Pr **0.22** and Pr **0.23**. The date/time will be written to the internal real time clock and any Solutions Module installed that supports real time clock functions.

The drive date and time (Pr **0.22** and Pr **0.23**) are used for the date/times associated with the trip log (Pr **10.41** to Pr **10.60**) and timer functions (Pr **0.52** to Pr **0.58**).

If Pr **0.24** is changed, then a reset must be initiated for the change to take place, otherwise the originally selected clock will be used for the trip log and timer functions.

If Pr **0.24** is changed and a reset is initiated then the trip log times are cleared and the repeat period for the timers (Pr **0.56**) set to zero, disabling the timers.

Daylight saving time is enabled if Pr **0.25** is set to 1 (Std) or 3 (US) and has the following effect:

Pr value	Pr string	Date format
0	Std	ddmmyy
1	Std.ds	ddmmyy with an extra hour added for daylight saving
2	US	mmddyy
3	US.ds	mmddyy with an extra hour added for daylight saving

6.2.12 Low load

0.26 {4.27}	Low load detection level									
RW	Uni								US	
⇳	0.0 to 100.0 %					⇨	0.0			

0.27 {4.28}	Low load detection speed / frequency threshold									
RW	Uni								US	
⇳	0.0 to +SPEED_FREQ_MAX Hz/rpm					⇨	0.0			

0.28 {4.29}	Trip on abnormal load detection									
RW	Bit								US	
⇳	OFF (0) or On (1)					⇨	OFF (0)			

The low load detection function is enabled if Pr **0.26** is set to a non zero value. It is activated when the load (Pr **4.20**) falls below the value set in Pr **0.26**, if the frequency/speed is above the value set in Pr **0.27** and the motor is not accelerating or decelerating i.e. "At Speed" parameter (Pr **10.06**) is set to one. When activated, a 'Load' warning message is displayed if Pr **0.28** is set to zero, otherwise a 'Load' drive trip is initiated. When low load is detected, Pr **10.61** changes to On (1).

6.2.13 SMARTCARD

0.29 {11.36}	SMARTCARD parameter data								
RO	Uni					NC	PT	US	
⇳	0 to 999				⇨	0			

This parameter shows the number of the data block last transferred from a SMARTCARD to the drive.

0.30 {11.42}	Parameter cloning								
RW	Txt					NC		*	
⇳	0 to 4				⇨	nonE (0)			

* Modes 1 and 2 are not user saved, Modes 0, 3 and 4 are user saved.

NOTE

If Pr **0.30** is equal to 1 or 2 this value is not transferred to the EEPROM or the drive. If Pr **0.30** is set to a 3 or 4 the value is transferred.

Pr String	Pr value	Comment
nonE	0	Inactive
rEAd	1	Read parameter set from the SMARTCARD
Prog	2	Programming a parameter set to the SMARTCARD
Auto	3	Auto save
boot	4	Boot mode

For further information, please refer to Chapter 10 *SMARTCARD operation* on page 125.

6.2.14 Drive parameters

0.31 {11.33}	Drive rated voltage									
RO	Txt					NC	PT			
⇳	200V (0), 400V (1), 575V (2), 690V (3)				⇨					

Pr **0.31** indicates the voltage rating of the drive.

0.32 {11.32}	Drive current scaling									
RO	Uni					NC	PT			
⇳	0.00 to 9,999.99 A				⇨					

Pr **0.32** indicates the drive current scaling.

0.33 {6.09}	Catch a spinning motor									
RW	Uni								US	
OL	⇳	0 to 3				⇨	0			
RFC	⇳	0 to 3				⇨	0			

Open-loop

When the drive is enabled with Pr **0.33** = 0, the output frequency starts at zero and ramps to the required reference. When the drive is enabled when Pr **0.33** has a non-zero value, the drive performs a start-up test to determine the motor speed and then sets the initial output frequency to the synchronous frequency of the motor. Restrictions may be placed on the frequencies detected by the drive as follows:

Pr 0.33	Function
0	Disabled
1	Detect all frequencies
2	Detect positive frequencies only
3	Detect negative frequencies only

RFC

When the drive is enabled with this bit at zero, the post ramp reference (Pr **2.01**) starts at zero and ramps to the required reference. When the drive is enabled with this bit at one the post ramp reference is set to the motor speed.

If catch a spinning motor is not required, this parameter should be set to zero as this avoids unwanted movement of the motor shaft when zero speed is required. With larger motors it may be necessary to increase Pr **5.40** *Spin Start Boost* from its default value of 1.0 for the drive to successfully detect the motor speed.

6.2.15 User security

0.34 {11.30}	User security code								
RW	Uni					NC	PT		PS
⇳	0 to 999				⇨	0			

If any number other than 0 is programmed into this parameter, user security is applied so that no parameters except parameter **0.49** can be adjusted with the keypad. When this parameter is read via a keypad it appears as zero.

For further details refer to section 5.10.3 *User Security* on page 82.

6.2.16 PC communications

0.35 {11.24}	PC comms mode								
RW	Txt							US	
⇳	AnSI (0), rtu (1), Lcd (2)				⇨	rtU (1)			

This parameter defines the communications protocol used by the EIA485 comms port on the drive. This parameter can be changed via the drive keypad, via a Solutions Module or via the comms interface itself. If it is changed via the comms interface, the response to the command uses the original protocol. The master should wait at least 20ms before send a new message using the new protocol. (Note: ANSI uses 7 data bits, 1 stop bit and even parity; Modbus RTU uses 8 data bits, 2 stops bits and no parity.)

Comms value	String	Communications mode
0	AnSI	ANSI
1	rtU	Modbus RTU protocol
2	Lcd	Modbus RTU protocol, but with an Keypad only

ANSIx3.28 protocol

Full details of the CT ANSI communications protocol are the *Advanced User Guide*.

Modbus RTU protocol

Full details of the CT implementation of Modbus RTU are given in the *Advanced User Guide*.

Modbus RTU protocol, but with an Keypad only

This setting is used for disabling communications access when the - Keypad is used as a hardware key.

0.36 {11.25}	PC comms baud rate								
RW	Txt							US	
⇳	300 (0), 600 (1), 1200 (2), 2400 (3), 4800 (4), 9600 (5), 19200 (6), 38400 (7), 57600 (8)*, 115200 (9)*				⇨	19200 (6)			

* only applicable to Modbus RTU mode

This parameter can be changed via the drive keypad, via a Solutions Module or via the comms interface itself. If it is changed via the comms interface, the response to the command uses the original baud rate. The master should wait at least 20ms before send a new message using the new baud rate.

0.37 {11.23}	PC comms address								
RW	Uni							US	
⇳	0 to 247				⇨	1			

Used to define the unique address for the drive for the serial interface. The drive is always a slave.

Modbus RTU

When the Modbus RTU protocol is used addresses between 0 and 247 are permitted. Address 0 is used to globally address all slaves, and so this address should not be set in this parameter

ANSI

When the ANSI protocol is used the first digit is the group and the second digit is the address within a group. The maximum permitted group number is 9 and the maximum permitted address within a group is 9. Therefore, Pr **0.37** is limited to 99 in this mode. The value 00 is used to globally address all slaves on the system, and x0 is used to address all slaves of group x, therefore these addresses should not be set in this parameter.

6.2.17 Hold zero speed / pre-heat

0.38 {6.08}	Hold zero speed / Motor pre-heat enable								
RW	Bit							US	
⇳	OFF (0) or On (1)				⇨	OFF (0)			

0.39 {6.52}	Motor pre-heat current magnitude								
RW	Uni							US	
⇳	0 to 100 %				⇨	0			

Pre-heat mode is enabled if Pr **0.38** is set to a one and Pr **0.39** is set to a value greater than zero. When the run command is removed and the motor has reached standstill then the drive applies a percentage (determined by the value in Pr **0.39**) of the motor rated current. When pre-heat is active, then the keypad displays the status "Heat".

Hold zero speed is enabled if Pr **0.38** is set to a one and Pr **0.39** is set to zero. When the run command is removed and the motor has reached standstill, the drive continues to apply the magnetising current. The level of magnetising current cannot be modified. When hold zero speed is active, then the keypad displays the status "StoP".

The drive cannot be switched between hold zero speed and pre-heat mode if any one of these modes is active. The drive should be disabled or running to change the mode.



The value in Pr **0.39** should not be set too high because it could damage the motor or cause the motor thermal protection to operate and trip the drive.

6.2.18 Autotune

0.40 {5.12}	Autotune									
RW	Uni									
OL	⇳	0 to 2			⇨	0				
RFC	⇳	0 to 4			⇨	0				

Open-Loop

There are two autotune tests available in open loop mode, a stationary and a rotating test. A rotating autotune should be used whenever possible, so the measured value of power factor of the motor is used by the drive.

- The stationary autotune can be used when the motor is loaded and it is not possible to remove the load from the motor shaft.
- A rotating autotune first performs a stationary autotune, before rotating the motor at $^2/_3$ base speed in the forward direction for several seconds. The motor must be free from load for the rotating autotune.

To perform an autotune, set Pr **0.40** to 1 for a stationary test or 2 for a rotating test, and provide the drive with an enable signal (on terminal 31) and press the green (hand) button.

Following the completion of an autotune test the drive will go into the inhibit state. The drive must be placed into a controlled disable condition before the drive can be made to run at the required reference. The drive can be put in to a controlled disable condition by removing the Enable signal from terminal 31, setting the drive enable parameter Pr **6.15** to OFF (0) or disabling the drive via the control word (Pr **6.42** & Pr **6.43**).

For further information refer to section *Pr 0.40 {5.12} Autotune* on page 118.

RFC

There are three autotune tests available in RFC mode, a stationary test, a rotating test and an inertia measurement test. A stationary autotune will give moderate performance whereas a rotating autotune will give improved performance as it measures the actual values of the motor parameters required by the drive. An inertia measurement test should be performed separately to a stationary or rotating autotune.

- The stationary autotune can be used when the motor is loaded and it is not possible to remove the load from the motor shaft.
- A rotating autotune first performs a stationary autotune, before rotating the motor at $^{2}/_{3}$ base speed in the forward direction for approximately 30 seconds. The motor must be free from load for the rotating autotune.
- The inertia measurement test can measure the total inertia of the load and the motor. This is used to set the speed loop gains (see *Speed loop gains*, below) and to provide torque feed forwards when required during acceleration. During the inertia measurement test the motor speed changes from $^{1}/_{3}$ to $^{2}/_{3}$ rated speed in the forward direction several times. The motor can be loaded with a constant torque load and still give an accurate result, however, non-linear loads and loads that change with speed will cause measurement errors.

To perform an autotune, set Pr **0.40** to 1 for a stationary test, 2 for a rotating test, or 3 for an inertia measurement test and provide the drive with both an enable signal (on terminal 31) and a run signal.

Following the completion of an autotune test the drive will go into the inhibit state. The drive must be placed into a controlled disable condition before the drive can be made to run at the required reference. The drive can be put in to a controlled disable condition by removing the Enable signal from terminal 31, setting the drive enable parameter Pr **6.15** to OFF (0) or disabling the drive via the control word (Pr **6.42** & Pr **6.43**).

Setting Pr **0.40** to 4 will cause the drive to calculate the current loop gains based on the previously measured values of motor resistance and inductance. The drive does apply any voltage to the motor during this test. The drive will change Pr **0.40** back to 0 as soon as the calculations are complete (approximately 500ms).

For further information refer to section *Pr 0.40 {5.12} Autotune* on page 121.

0.41 {5.18}	**Maximum switching frequency**								
RW	Txt				RA			US	
⇳	3 (0), 4 (1), 6 (2), 8 (3), 12 (4), 16 (5) kHz				⇨	3 (0)			

This parameter defines the required switching frequency. The drive may automatically reduce the actual switching frequency (without changing this parameter) if the power stage becomes too hot. A thermal model of the IGBT junction temperature is used based on the heatsink temperature and an instantaneous temperature drop using the drive output current and switching frequency. The estimated IGBT junction temperature is displayed in Pr **7.34**. If the temperature exceeds 145°C the switching frequency is reduced if this is possible (i.e >3kHz). Reducing the switching frequency reduces the drive losses and the junction temperature displayed in Pr **7.34** also reduces. If the load condition persists the junction temperature may continue to rise again above 145°C and the drive cannot reduce the switching frequency further the drive will initiate an 'O.ht1' trip. Every second the drive will attempt to restore the switching frequency to the level set in Pr **0.41**.

The full range of switching frequencies is not available on all ratings of Affinity. See section 9.4 *Switching frequency* on page 123, for the maximum available switching frequency for each drive rating.

6.2.19 Motor parameters

0.42 {5.11}	**No. of motor poles**								
RW	Txt							US	
⇳	0 to 60 (Auto to 120 Pole)				⇨	Auto (0)			

Open-loop

This parameter is used in the calculation of motor speed, and in applying the correct slip compensation. When auto is selected, the number of motor poles is automatically calculated from the rated frequency (Pr **0.47**) and the rated full load rpm (Pr **0.45**). The number of poles = 120 * rated frequency / rpm rounded to the nearest even number.

RFC

This parameter must be set correctly for the vector control algorithms to operate correctly. When auto is selected, the number of motor poles is automatically calculated from the rated frequency (Pr **0.47**) and the rated full load rpm (Pr **0.45**). The number of poles = 120 * rated frequency / rpm rounded to the nearest even number.

0.43 {5.10}	**Motor rated power factor**								
RW	Uni							US	
OL	⇳	0.000 to 1.000			⇨	0.850			

The power factor is the true power factor of the motor, i.e. the angle between the motor voltage and current.

Open-loop

The power factor is used in conjunction with the motor rated current (Pr **0.46**) to calculate the rated active current and magnetising current of the motor. The rated active current is used extensively to control the drive, and the magnetising current is used in vector mode Rs compensation. It is important that this parameter is set up correctly.

This parameter is obtained by the drive during a rotational autotune. If a stationary autotune is carried out, then the nameplate value should be entered in Pr **0.43**.

RFC

If the stator inductance (Pr **5.25**) contains a non-zero value, the power factor used by the drive is continuously calculated and used in the vector control algorithms (this will not update Pr **0.43**).

If the stator inductance is set to zero (Pr **5.25**) then the power factor written in Pr **0.43** is used in conjunction with the motor rated current and other motor parameters to calculate the rated active and magnetising currents which are used in the vector control algorithm.

This parameter is obtained by the drive during a rotational autotune. If a stationary autotune is carried out, then the nameplate value should be entered in Pr **0.43**.

0.44 {5.09}	**Motor rated voltage**								
RW	Uni				RA			US	
⇳	0 to AC_VOLTAGE_SET_MAX V				⇨	200V drive: 230 400V drive: EUR> 400 USA> 460 575V drive: 575 690V drive: 690			

Enter the value from the rating plate of the motor.

0.45 {5.08}	Motor rated full load speed (rpm)								
RW	Uni							US	
OL	⇳	0 to 180,000 rpm				⇨	EUR> 1,500 USA> 1,800		
RFC	⇳	0.00 to 40,000.00 rpm				⇨	EUR> 1,450.00 USA> 1,770.00		

Open-loop

This is the speed at which the motor would rotate when supplied with its base frequency at rated voltage, under rated load conditions (= synchronous speed - slip speed). Entering the correct value into this parameter allows the drive to increase the output frequency as a function of load in order to compensate for this speed drop.

Slip compensation is disabled if Pr **0.45** is set to 0 or to synchronous speed, or if Pr **5.27** is set to 0.

If slip compensation is required this parameter should be set to the value from the rating plate of the motor, which should give the correct rpm for a hot machine. Sometimes it will be necessary to adjust this when the drive is commissioned because the nameplate value may be inaccurate. Slip compensation will operate correctly both below base speed and within the field weakening region. Slip compensation is normally used to correct for the motor speed to prevent speed variation with load. The rated load rpm can be set higher than synchronous speed to deliberately introduce speed droop. This can be useful to aid load sharing with mechanically coupled motors.

RFC

Rated load rpm is used with motor rated frequency to determine the full load slip of the motor which is used by the vector control algorithm. Incorrect setting of this parameter can result in the following:

- Reduced efficiency of motor operation
- Reduction of maximum torque available from the motor
- Failure to reach maximum speed
- Over-current trips
- Reduced transient performance
- Inaccurate control of absolute torque in torque control modes

The nameplate value is normally the value for a hot machine, however, some adjustment may be required when the drive is commissioned if the nameplate value is inaccurate.

0.46 {5.07}	Motor rated current								
RW	Uni				RA			US	
⇳	0 to Rated_current_max A					⇨	Drive rated current [**11.32**]		

Enter the name-plate value for the motor rated current.

0.47 {5.06}	Rated frequency								
RW	Uni							US	
OL	⇳	0 to 3,000.0Hz				⇨	EUR> 50.0, USA> 60.0		
RFC	⇳	0 to 1,250.0Hz				⇨	EUR> 50.0, USA> 60.0		

Open-loop & RFC

Enter the value from the rating plate of the motor.

6.2.20 Operating-mode selection

0.48 {11.31}	Operating mode selector								
RW	Txt	NC						PT	
⇳	1 to 2					⇨	OL	1	
							RFC	2	

The settings for Pr **0.48** are as follows:

Setting		Operating mode
OPEn LP	1	Open-loop
rfc	2	RFC

This parameter defines the drive operating mode. Pr **xx.00** must be set to 1253 (European defaults) or 1254 (USA defaults) before this parameter can be changed. When the drive is reset to implement any change in this parameter, the default settings of all parameters will be set according to the drive operating mode selected and saved in memory.

6.2.21 Status information

0.49 {11.44}	Security status								
RW	Txt						PT	US	
⇳	0 to 2				⇨	0			

This parameter controls access via the drive keypad as follows:

Value	String	Action
0	L1	Only menu 0 can be accessed
1	L2	All menus can be accessed
2	Loc	Lock user security when drive is reset. (This parameter is set to L1 after reset.)

The keypad can adjust this parameter even when user security is set.

0.50 {11.29}	Software version number								
RO	Uni					NC	PT		
⇳	1.00 to 99.99				⇨				

The parameter displays the software version of the drive.

0.51 {8.29}	Positive logic select								
RW	Bit						PT	US	
⇳	OFF (0) or On (1)				⇨	On (1)			

Pr **0.51** changes the logic polarity for digital inputs and digital outputs, but not the enable input, the relay output or the 24V output.

	Pr 0.51 = 0 (negative logic)	Pr 0.51 = 1 (positive logic)
Inputs	<5V = 1 >15V = 0	<5V = 0 >15V = 1
Non-relay outputs	On (1) = <5V OFF (0) = >15V	OFF (0) = <5V On (1) = >15V
Relay outputs	OFF (0) = open On (1) = closed	OFF (0) = open On (1) = closed
24V output (T22)	OFF (0) = 0V On (1) = 24V	OFF (0) = 0V On (1) = 24V

6.2.22 Timer functions

The timer functions allow a digital output to be automatically set / reset periodically. This can be a one-off event or a repeated on a hourly, daily, weekly, monthly or annual basis.

0.52 {9.35}	**Timer 1 start date**								
RW	Uni						PT	US	
⇳	0 to 311299				⇨	0			

0.53 {9.36}	**Timer 1 start time**								
RW	Uni						PT	US	
⇳	0.00 to 23.59				⇨	0.00			

0.54 {9.37}	**Timer 1 stop date**								
RW	Uni						PT	US	
⇳	0 to 311299				⇨	0			

0.55 {9.38}	**Timer 1 stop time**								
RW	Uni						PT	US	
⇳	0.00 to 23.59				⇨	0.00			

The timer output is energized when the start date/time (Pr **0.52**, Pr **0.53**) is reached and de-energized when the stop date/time is reached (Pr **0.54**, Pr **0.55**).

0.56 {9.39}	**Timer 1 repeat function**								
RW	Uni						PT	US	
⇳	0 to 6				⇨	0			

The output is energized on a periodic basis according to the value set in the repeat period (Pr **0.56**), as shown in the table below.

Pr 0.56	Repeat period	Hour	Minute	Year	Month	Day	Day of week
0	None						
1	Every hour		✓				
2	Every day	✓	✓				
3	Every week	✓	✓				✓
4	Every month	✓	✓			✓	
5	Every year	✓	✓		✓	✓	
6	One off event	✓	✓	✓	✓	✓	

0.57 {9.40}	**Timer 1 enable**								
RW	Uni						PT	US	
⇳	0.00 to 50.99				⇨	0.00			

The timer function is enabled if Pr **0.57** is set to 1.

0.58 {9.43}	**Timer 1 destination**								
RW	Uni						PT	US	
⇳	0.00 to 50.99				⇨	0.00			

The timer destination is determined by the value in Pr **0.58**.

7 Macros

7.1 Introduction

The drive is supplied with a SMARTCARD containing pre-programmed parameter sets or macros for use in specific applications. These macros minimise the number of different parameters that need to be modified during start-up. The control terminals of the drive are configured for the specific application, and parameters used in the application are cloned into menu 0.

Table 7-1 below shows the macros available on the SMARTCARD.

Table 7-1 Macro numbers

Macro Number	Description
650**1**	User Defined
650**2**	I/O Set-up
650**3**	Monitor
650**4**	Pump and Fan Control
650**5**	Pressure Control
650**6**	Compressor

Macro 1 - User Defined

The User Defined macro gives the simplest operation of the drive for basic applications. It is identical to the default condition except that menu 0 has been simplified with fewer parameters. When in Auto mode, the run/stop commands and frequency reference are given by terminal inputs. A digital input selects which analog input (input 1; -10 to +10V, input 2; 4 to 20mA) is used for the reference. When in Hand mode, they are given by the keypad.

Macro 2 - I/O Set-up

The I/O Set-up macro is for use in applications where the functionality requires the I/O set-up to be changed. It is identical to the default condition except that menu 0 is configured to show all common analog and digital set-up parameters. When in Auto mode, the run/stop commands and frequency reference are given by terminal inputs. A digital input selects which analog input (-10 to +10V) is used for the reference. When in Hand mode, they are given by the keypad.

Macro 3 - Monitor

The Monitor macro is for use in applications where it is desirable to monitor key drive parameters. It is identical to the default condition except that menu 0 is configured to show all commonly use read only monitoring parameters. When in Auto mode, the run/stop commands and frequency reference are given by terminal inputs. A digital input selects which analog input (input 1; -10 to +10V, input 2; 4 to 20mA) is used for the reference. When in Hand mode, they are given by the keypad.

Macro 4 - Pump and Fan Control

The Pump and Fan macro configures the drive for use in applications which require a quadratic voltage frequency characteristic such as pumps and fans. When in Auto mode, the run/stop commands and frequency reference are given by terminal inputs. A digital input selects which analog input (input 1; -10 to +10V, input 2; 4 to 20mA) is used for the reference. When in Hand mode, they are given by the keypad.

Macro 5 - Pressure Control

The Pressure control macro configures the drive for use in applications which require variable torque control such as pumps and fans where the drive uses the PID controller to vary the speed of the motor depending upon the pressure set point and feedback, and a quadratic voltage frequency characteristic is required. When in Auto mode, the run/stop commands are given by terminal inputs. The frequency reference can be given by either PID controller or terminal inputs. Digital inputs select if the PID controller or analog input is used as a reference and which analog input (input 1; -10 to +10V, input 2; 4 to 20mA) is used for the reference. When in Hand mode, they are given by the keypad.

.

Macro 6 - Compressor

The Compressor control macro configures the drive for use in applications which require variable speed control where the drive uses the PID controller to vary the speed of the motor depending upon the pressure set point and feedback. When in auto mode, the run/stop commands are given by terminal inputs. The frequency reference can be given by either PID controller or terminal inputs. Digital inputs select if the PID controller or analog input is used as a reference and which analog input (input 1; -10 to +10V, input 2; 4 to 20mA) is used for the reference. When in hand mode, they are given by the keypad.

A digital input selects between an analog frequency reference and the PID pressure control.

All macros configure the drive for use in open loop mode, except Macro 6 - Compressor, which configures the drive for RFC mode due to the increased starting torque required.

The functions of Pr **0.13** to Pr **0.28** are configured by each macro. The remaining Menu 0 parameters are common to each macro and take their default settings (see section 6.1 *Single line descriptions* on page 85).

7.2 How to load a macro

To load a macro, first insert the SMARTCARD into the drive as shown in Figure 7-1 below. Ensure the SMARTCARD is installed with the contacts facing the right-hand side of the drive. If the drive trips, see Chapter 14 *Diagnostics* on page 235

The SMARTCARD may be installed or removed while the drive is powered up.

Figure 7-1 Installation of the SMARTCARD

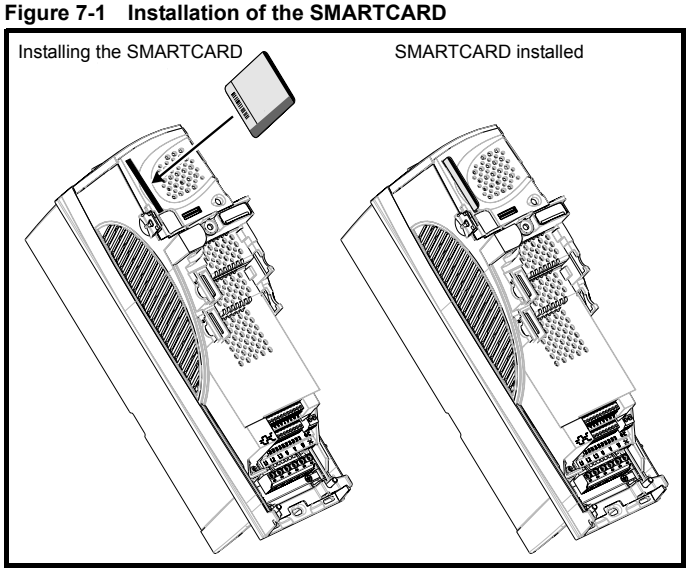

A macro is loaded from the SMARTCARD into the drive by setting Pr **xx.00** (i.e. Pr **1.00**, Pr **2.00**, Pr **3.00**, etc.) to the macro number in Table 7-1 *Macro numbers* on page 99, and performing a drive reset. The drive can be reset by:

- Pressing the red reset button.
- Toggling the reset digital input (terminal 25 - default configuration).
- Setting Pr **10.38** via communications.

A macro must be loaded before any other parameters in the drive are modified, i.e. motor map parameters. All parameters in the drive will be set to their default value when a macro is loaded from the SMARTCARD, except for those parameters set-up by loading the macro.

7.3 Macro 1 - User Defined

Macro 1	User Defined	Macro number: 6501

The User Defined macro gives the simplest operation of the drive for basic applications.

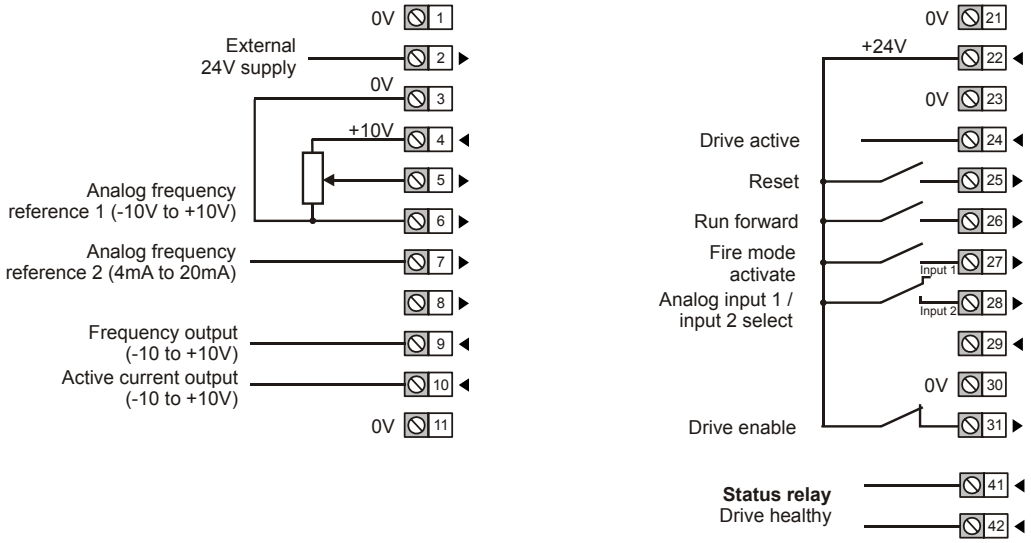

The User Defined macro does not have any additional parameters in menu 0

Figure 7-2 Macro 1 logic diagram

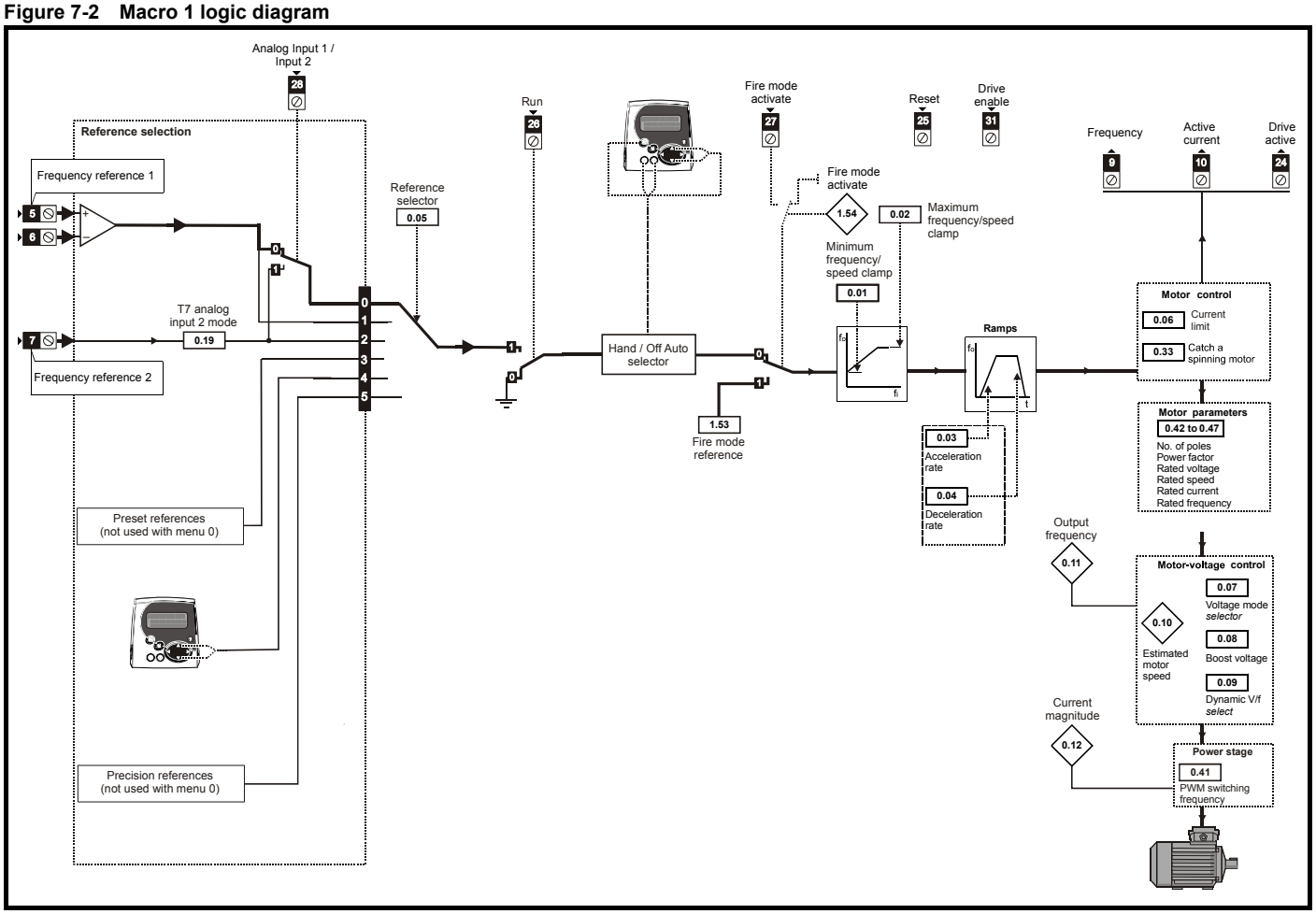

7.4 Macro 2 - I/O Set-up

Macro 2	I/O Set-up	Macro number: 6502

The I/O Set-up macro is identical to the default condition except that menu 0 is configured to show all common analog and digital set-up parameters..

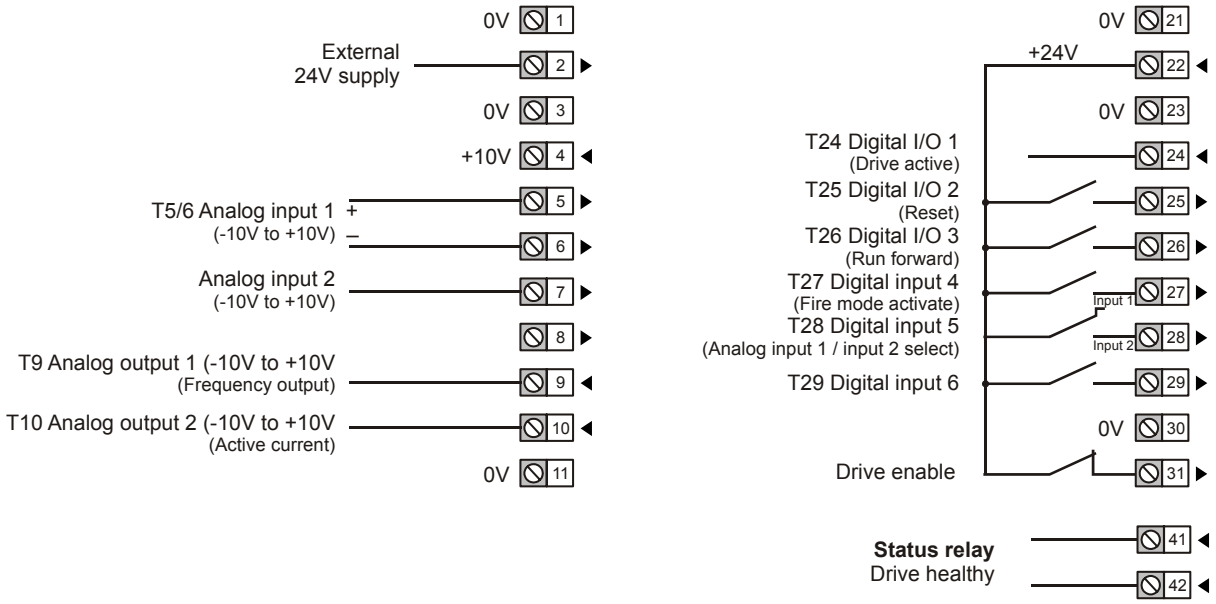

Table 7-2 Macro 2 - menu 0 parameter differences

Parameter			Range	Macro Default	Type					
0.13	Percentage load	{**4.20**}	±USER_CURRENT_MAX %		RO	Bi	FI	NC	PT	
0.14	Enable sequencer latching	{**6.40**}	OFF (0) or On (1)	OFF (1)	RW	Bit				US
0.15	T24 digital I/O 1 source/destination	{**8.21**}	Pr **0.00** to **50.99**	Pr **10.02**	RW	Uni	DE		PT	US
0.16	T25 digital I/O 2 source/destination	{**8.22**}	Pr **0.00** to **50.99**	Pr **10.33**	RW	Uni	DE		PT	US
0.17	T26 digital I/O 3 source/destination	{**8.23**}	Pr **0.00** to **50.99**	Pr **6.30**	RW	Uni	DE		PT	US
0.18	T27 digital input 4 destination	{**8.24**}	Pr **0.00** to **50.99**	Pr **1.54**	RW	Uni	DE		PT	US
0.19	T28 digital input 5 destination	{**8.25**}	Pr **0.00** to **50.99**	Pr **1.41**	RW	Uni	DE		PT	US
0.20	T29 digital input 6 destination	{**8.26**}	Pr **0.00** to **50.99**	Pr **0.00**	RW	Uni	DE		PT	US
0.21	T5/6 analog input 1 destination	{**7.10**}	Pr **0.00** to **50.99**	Pr **1.36**	RW	Uni	DE		PT	US
0.22	T7 analog input 2 mode	{**7.11**}	0-20 (0), 20-0 (1), 4-20.tr (2), 20-4.tr (3),4-20 (4), 20-4 (5), VOLt (6)	VOLt (6)	RW	Txt				US
0.23	T7 analog input 2 destination	{**7.14**}	Pr **0.00** to **50.99**	Pr **1.37**	RW	Uni	DE		PT	US
0.24	T9 analog output 1 mode	{**7.21**}	VOLt (0), 0-20 (1), 4-20 (2), H.SPd (3)	VOLt (0)	RW	Txt				US
0.25	T9 analog output 1 source	{**7.19**}	Pr **0.00** to **50.99**	Pr **5.01**	RW	Uni			PT	US
0.26	T10 analog output 2 mode	{**7.24**}	VOLt (0), 0-20 (1), 4-20 (2), H.SPd (3)	VOLt (0)	RW	Txt				US
0.27	T10 analog output 2 source	{**7.22**}	Pr **0.00** to **50.99**	Pr **4.02**	RW	Uni			PT	US

Figure 7-3 Macro 2 logic diagram

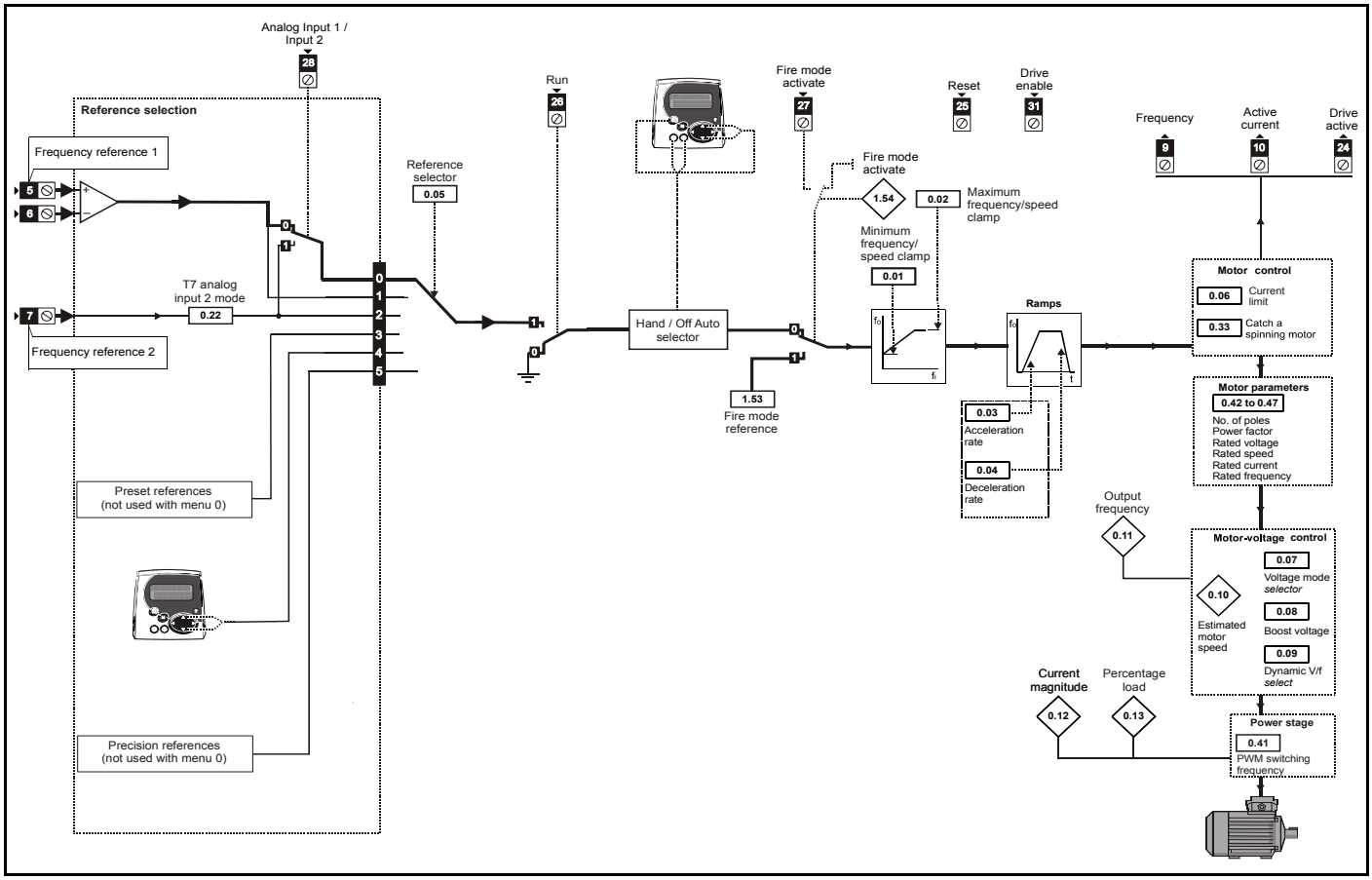

7.5 Macro 3 - Monitor

Macro 3	Monitor	Macro number: 6503

The Monitor macro is identical to the default condition except that menu 0 is configured to show all commonly used read-only monitoring parameters.

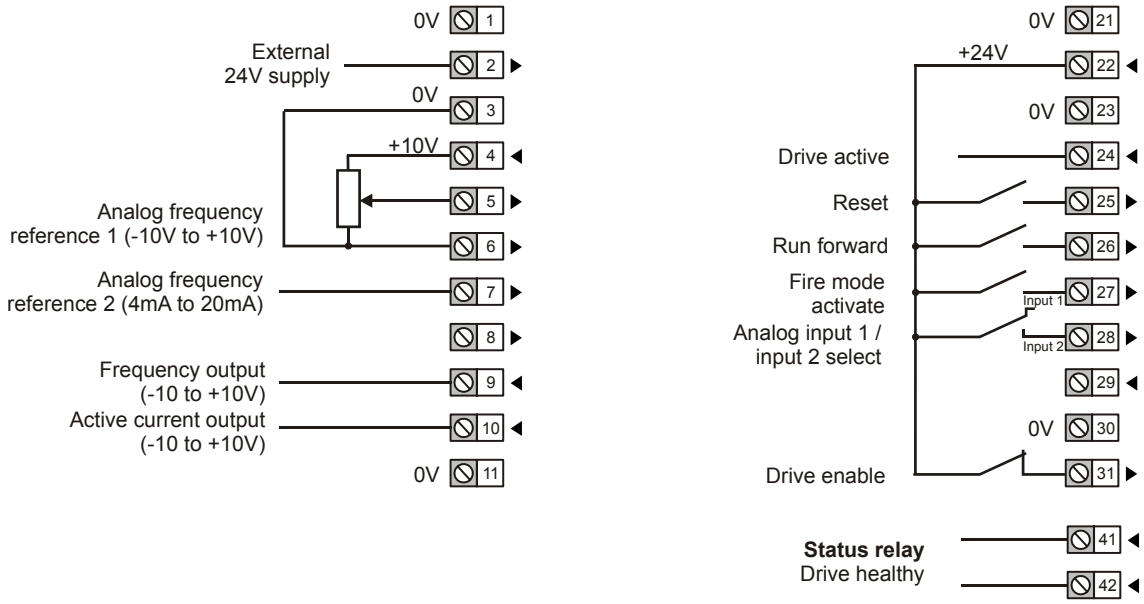

Table 7-3 Macro 3 - menu 0 parameter differences

Parameter			Range	Macro Default	Type					
0.13	Active current	{**4.02**}	±DRIVE_CURRENT_MAX A		RO	Bi	FI	NC	PT	
0.14	Frequency / speed reference selected	{**1.01**}	±SPEED_FREQ_MAX Hz/rpm		RO	Bi		NC	PT	
0.15	Pre ramp reference	{**1.03**}	±SPEED_FREQ_MAX Hz/rpm		RO	Bi		NC	PT	
0.16	Post ramp reference	{**2.01**}	±SPEED_FREQ_MAX Hz/rpm		RO	Bi		NC	PT	
0.17	At speed	{**10.06**}	OFF (0) or On (1)		RO	Bit		NC	PT	
0.18	Overload accumulator	{**4.19**}	0.0 to 100.0%		RO	Uni		NC	PT	
0.19	Drive output is at current limit	{**10.09**}	OFF (0) or On (1)		RO	Bit		NC	PT	
0.20	Overload alarm	{**10.17**}	OFF (0) or On (1)		RO	Bit		NC	PT	
0.21	IGBT junction temperature	{**7.34**}	±200°C		RO	Bi		NC	PT	
0.22	Drive thermal protection accumulator	{**7.35**}	0.0 to 100.0%		RO	Uni		NC	PT	
0.23	Drive over temperature alarm	{**10.18**}	OFF (0) or On (1)		RO	Bit		NC	PT	
0.24	Regenerating	{**10.10**}	OFF (0) or On (1)		RO	Bit		NC	PT	
0.25	Braking IGBT active	{**10.11**}	OFF (0) or On (1)		RO	Bit		NC	PT	
0.26	Braking resistor alarm	{**10.12**}	OFF (0) or On (1)		RO	Bit		NC	PT	
0.27	Braking energy overload accumulator	{**10.39**}	0.0 to 100.0%		RO	Uni		NC	PT	

Figure 7-4 Macro 3 logic diagram

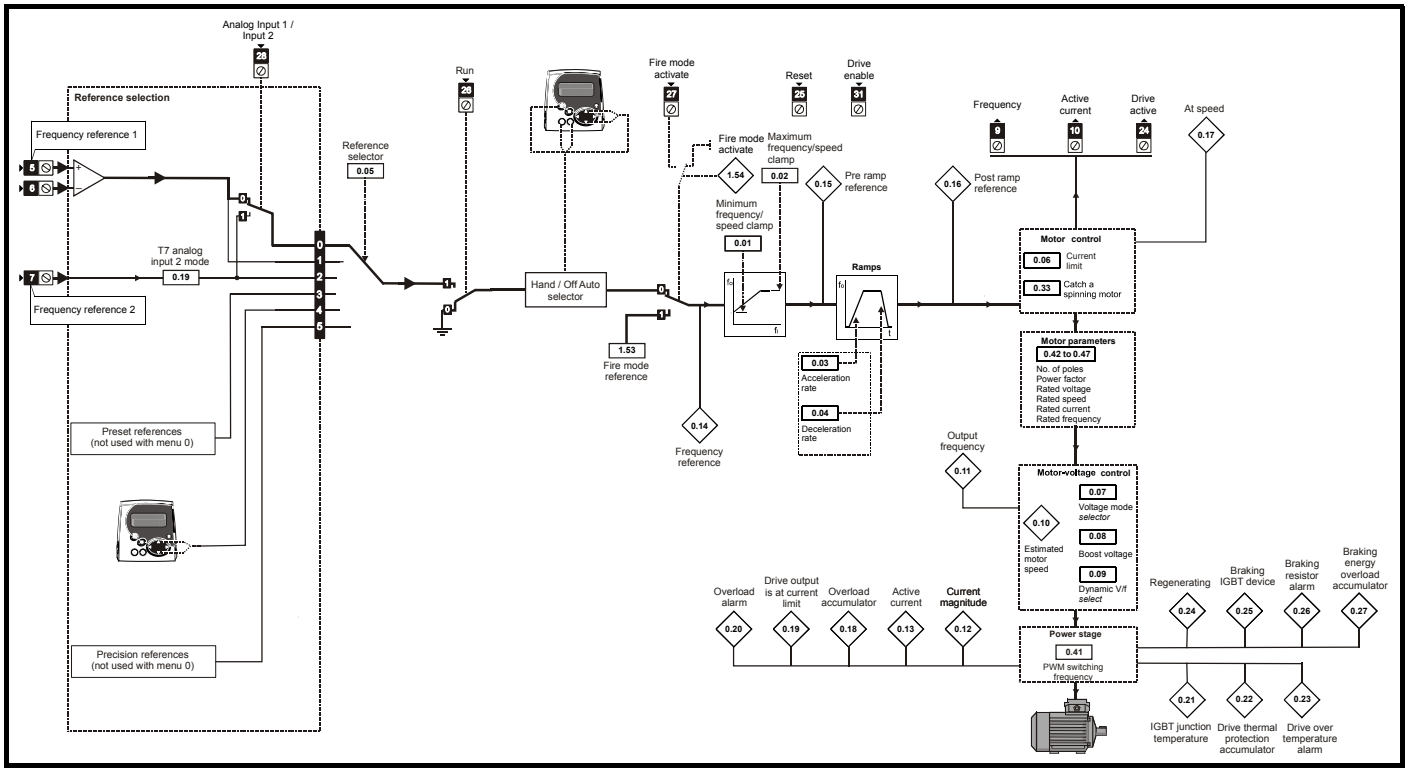

7.6 Macro 4 - Pump and Fan Control

Macro 4	Variable Torque Pump and Fan	Macro number: 6504

.The Pump and Fan Control macro configures the drive for use in applications such as pumps and fans which have a quadratic voltage frequency characteristic.

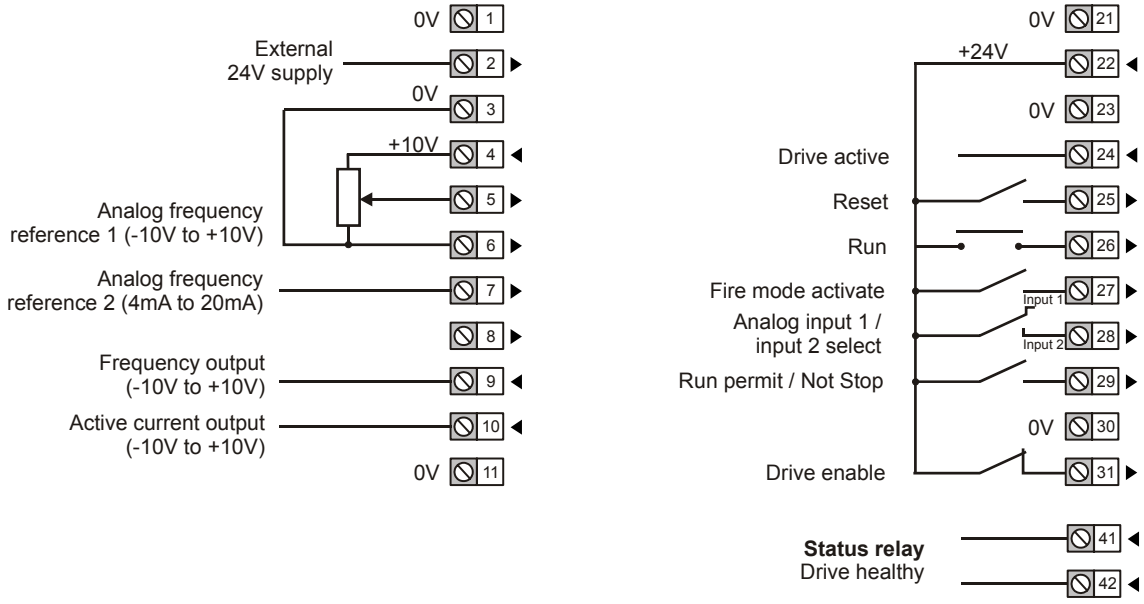

Table 7-4 Macro 4 - menu 0 parameter differences

Parameter			Range	Macro Default	Type					
0.01	Minimum reference clamp	{**1.07**}	±3000.0 Hz	30.0	RW	Bi			PT	US
0.07	Voltage mode select	{**5.14**}	Ur_S (0), Ur (1), Fd (2), Ur_Auto (3), Ur_I (4), SrE (5)	SrE (5)	RW	Txt				US
0.13	Percentage load	{**4.20**}	±USER_CURRENT_MAX %		RO	Bi	FI	NC	PT	
0.14	Enable sequencer latching	{**6.40**}	OFF (0) or On (1)	On (1)	RW	Bit				US
0.15	T24 digital I/O 1 source/destination	{**8.21**}	Pr **0.00** to **50.99**	Pr **10.02**	RW	Uni	DE		PT	US
0.16	T26 digital I/O 3 source/destination	{**8.23**}	Pr **0.00** to **50.99**	Pr **6.34**	RW	Uni	DE		PT	US
0.17	T29 digital input 6 destination	{**8.24**}	Pr **0.00** to **50.99**	Pr **6.39**	RW	Uni	DE		PT	US
0.18	Stop mode	{**6.01**}	COASt (0), rP (1), rP.dcl (2), dcl (3), td.dcl(4), diSAbLE (5)	rP (1)	RW	Txt				US
0.19	T7 analog input 2 mode	{**7.11**}	0-20 (0), 20-0 (1), 4-20.tr (2), 20-4.tr (3),4-20 (4), 20-4 (5), VOLt (6)	4-20 (4)	RW	Txt				US
0.20	Skip reference 1	{**1.29**}	0.0 to 3000.0 Hz	0.0	RW	Uni				US
0.21	Skip reference band 1	{**1.30**}	0.0 to 25.0 Hz	0.0	RW	Uni				US
0.22	Skip reference 2	{**1.31**}	0.0 to 3000.0 Hz	0.0	RW	Uni				US
0.23	Skip reference band 2	{**1.32**}	0.0 to 25.0 Hz	0.0	RW	Uni				US
0.24	Ramp mode select	{**2.04**}	FASt (0), Std (1), Std.HV (2)	Std (1)	RW	Txt				US
0.25	S ramp enable	{**2.06**}	OFF (0) or On (1)	OFF (0)	RW	Bit				US
0.26	No. of auto-reset attempts	{**10.34**}	0 to 5	0	RW	Uni				US
0.27	Auto reset delay	{**10.35**}	0.0 to 25.0 s	5.0	RW	Uni				US
0.33	Catch a spinning motor	{**6.09**}	0 to 3	1	RW	Uni				US

Figure 7-5 Macro 4 logic diagram

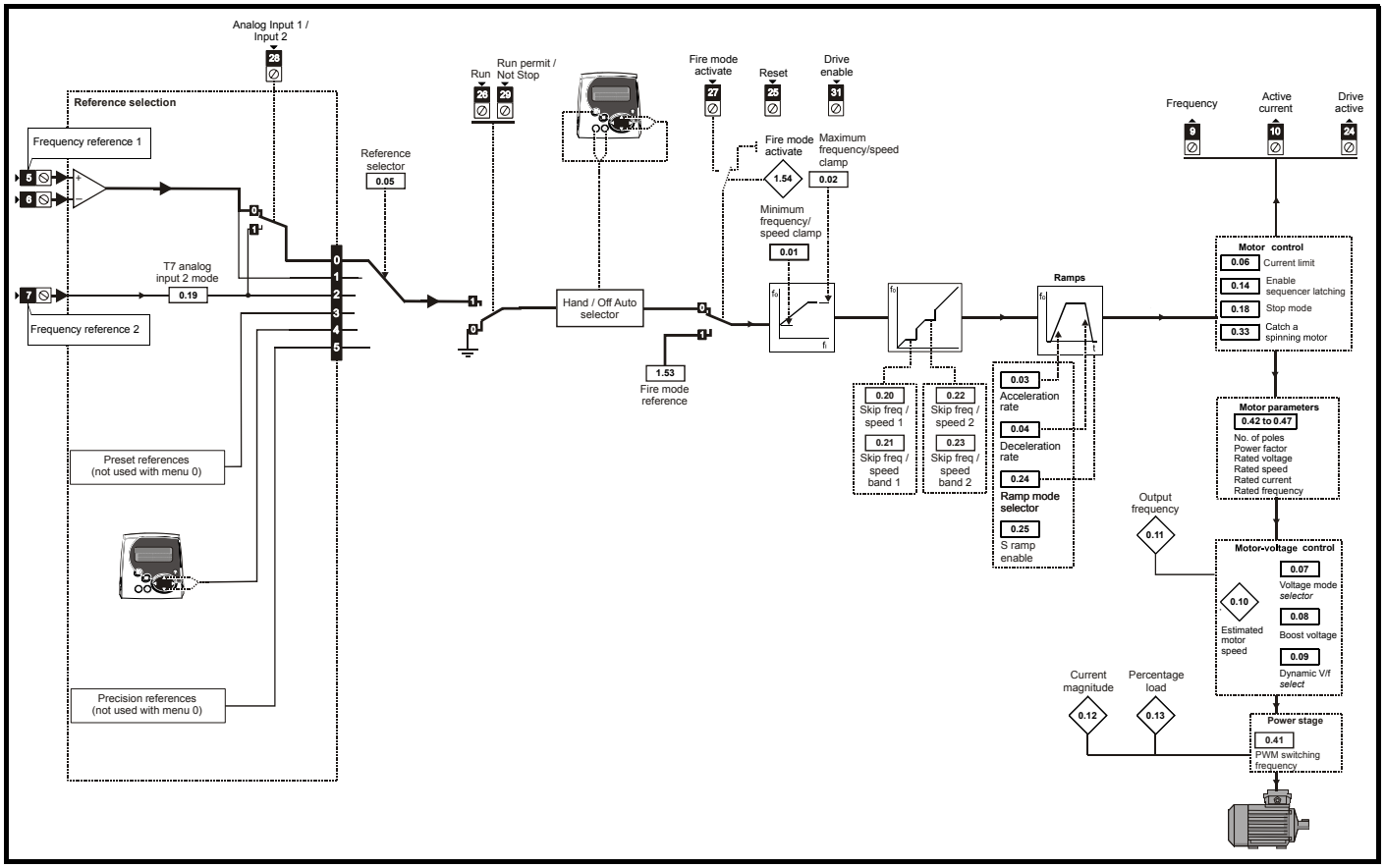

7.7 Macro 5 - Pressure Control

Macro 5	Pressure Control	Macro number: 6505

The Pressure Control macro configures the drive for use in applications such as pumps and fans, but uses the drives PID controller to vary the speed of the motor depending on the pressure set point and feedback. When in Auto mode the run command to the drive is given by a digital input, and the frequency reference is given either by:

- A 0V to 10V analog input
- The PID controller with the pressure feedback signal given via a 4mA to 20mA analog input, setpoint from Pr **18.01**

A digital input selects between an analog frequency reference and the PID pressure control.

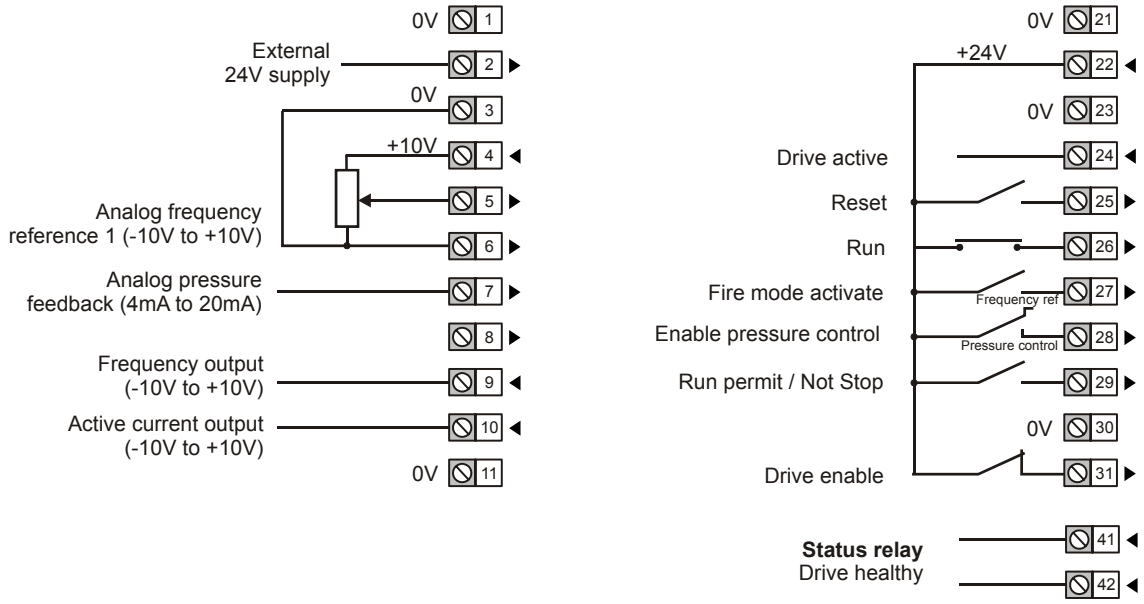

Table 7-5 Macro 5 - menu 0 parameter differences

Parameter			Range	Macro Default	Type					
0.01	Minimum reference clamp	{**1.07**}	±3000.0 Hz	30.0	RW	Bi			PT	US
0.07	Voltage mode select	{**5.14**}	Ur_S (0), Ur (1), Fd (2), Ur_Auto (3), Ur_I (4), SrE (5)	SrE (5)	RW	Txt				US
0.13	Percentage load	{**4.20**}	±USER_CURRENT_MAX %		RO	Bi	FI	NC	PT	
0.14	Enable sequencer latching	{**6.40**}	OFF (0) or On (1)	On (1)	RW	Bit				US
0.15	T24 digital I/O 1 source/destination	{**8.21**}	Pr **0.00** to **50.99**	Pr **10.02**	RW	Uni	DE		PT	US
0.16	T26 digital I/O 3 source/destination	{**8.23**}	Pr **0.00** to **50.99**	Pr **6.34**	RW	Uni	DE		PT	US
0.17	T29 digital input 6 destination	{**8.24**}	Pr **0.00** to **50.99**	Pr **6.39**	RW	Uni	DE		PT	US
0.18	Stop mode	{**6.01**}	COASt (0), rP (1), rP.dcl (2), dcl (3), td.dcl(4), diSAbLE (5)	rP (1)	RW	Txt				US
0.19	T7 analog input 2 mode	{**7.11**}	0-20 (0), 20-0 (1), 4-20.tr (2), 20-4.tr (3),4-20 (4), 20-4 (5), VOLt (6)	4-20 (4)	RW	Txt				US
0.20	PID 1 feedback source	{**14.04**}	Pr **0.00** to **50.99**	Pr **7.02**	RW	Uni			PT	US
0.21	PID 1 reference source	{**14.03**}	Pr **0.00** to **50.99**	Pr **18.01**	RW	Uni			PT	US
0.22	PID 1 output destination	{**14.16**}	Pr **0.00** to **50.99**	Pr **1.37**	RW	Uni	DE		PT	US
0.23	PID 1 P gain	{**14.10**}	0.000 to 4.000	1.000	RW	Uni				US
0.24	PID 1 I gain	{**14.11**}	0.000 to 4.000	0.500	RW	Uni				US
0.25	PID 1 enable	{**14.08**}	OFF (0) or On (1)	On (1)	RW	Uni				US
0.26	PID 1 optional enable source	{**14-09**}	Pr **0.00** to **50.99**	Pr **8.05**	RW	Uni			PT	US
0.27	PID 1 output scaling factor	{**14.15**}	0.000 to 4.000	1.000	RW	Uni				US
0.28	Square root scaling	{**14.58**}	0.000 to 4.000	0.000	RW	Uni				US
0.33	Catch a spinning motor	{**6.09**}	0 to 3	1	RW	Uni				US
0.59	PID set-point (Application menu 1 power-down saved integer)	{**18.01**}	-32,768 to +32,767	0	RW	Bi		NC		PS

Figure 7-6 Macro 5 logic diagram

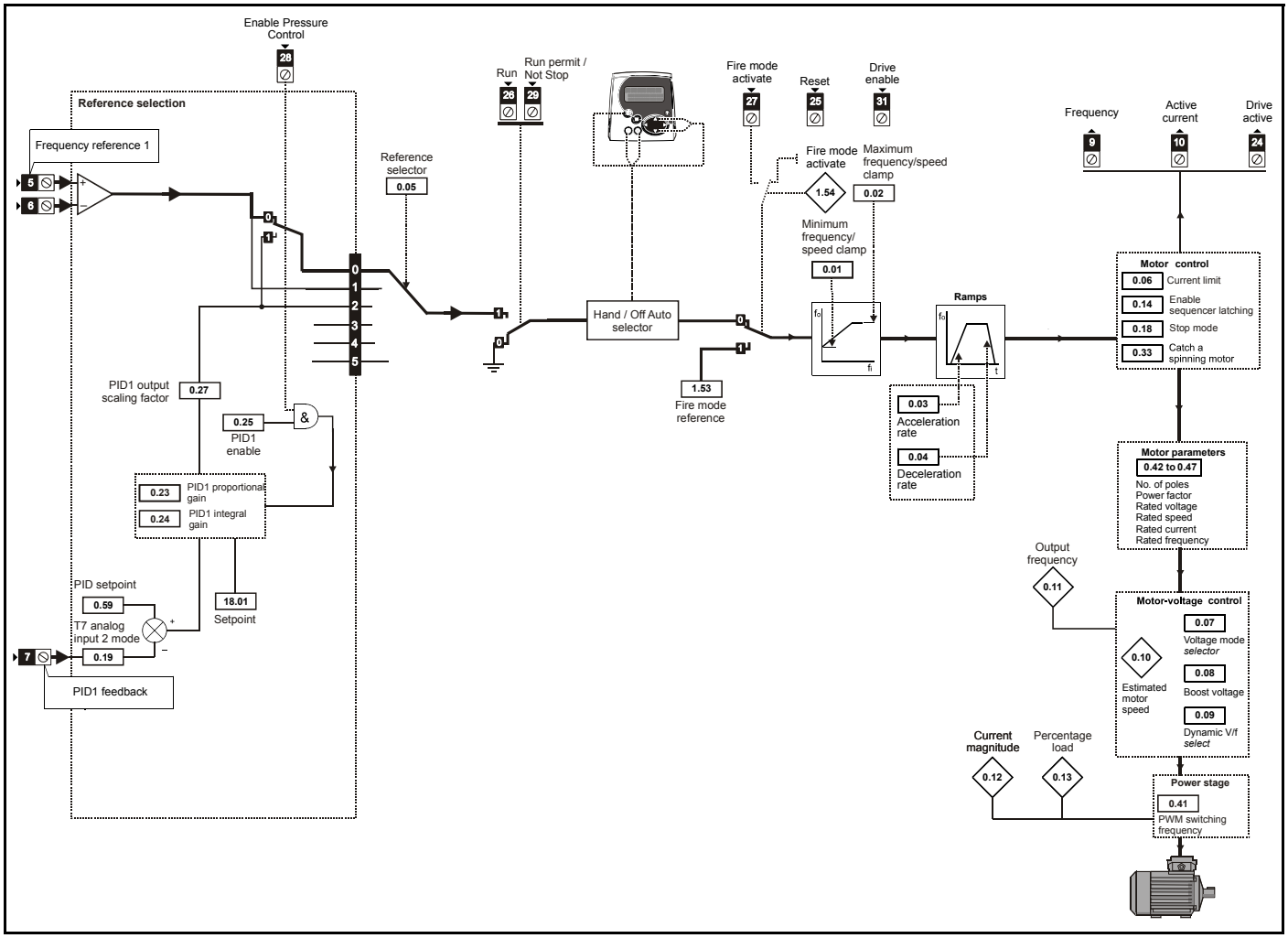

7.8 Macro 6 - Compressor

Macro 10	Compressor	Macro number: 6510

The Compressor macro configures the drive for use in compressor applications and uses the drives PID controller to vary the speed of the motor depending on the pressure set point and feedback. When in Auto mode the run command to the drive is given by a digital input, and the frequency reference is given either by:

- A 0V to 10V analog input
- The PID controller with the pressure feedback signal given via a 4mA to 20mA analog input, setpoint from Pr **18.01**

A digital input selects between an analog frequency reference and the PID pressure control.

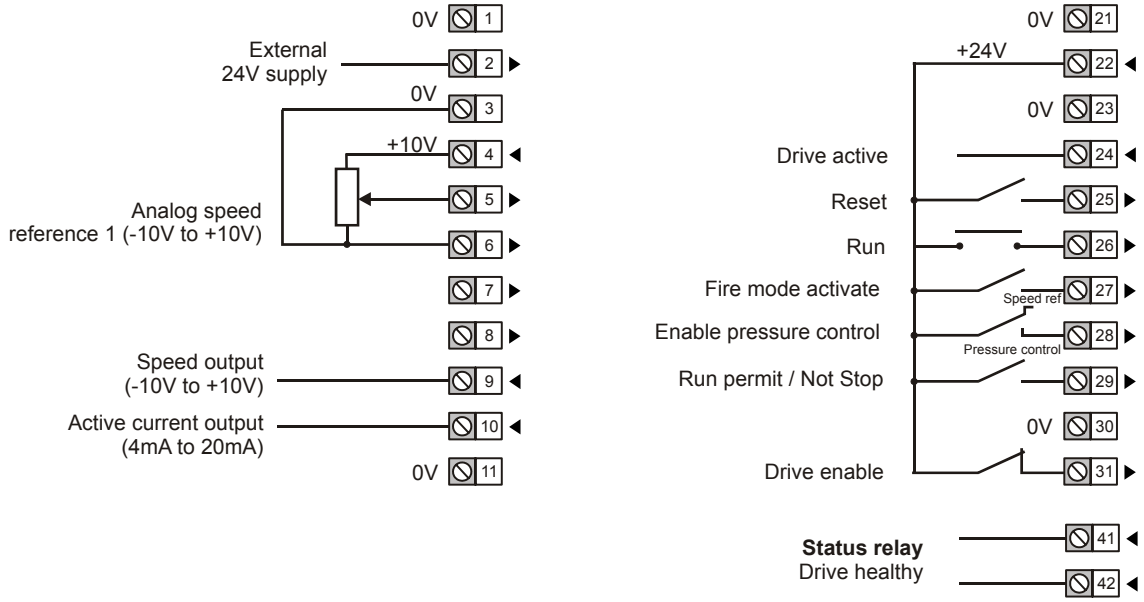

Table 7-6 Macro 6 - menu 0 parameter differences

Parameter			Range	Macro Default	Type					
0.01	Minimum reference clamp	{**1.07**}	±SPEED_LIMIT_MAX rpm	900.0	RW	Bi			PT	US
0.03	Acceleration rate 1	{**2.11**}	0.000 to 3,200.000 s/1,000rpm	5.0	RW	Uni				US
0.04	Deceleration rate 1	{**2.21**}	0.000 to 3,200.000 s/1,000rpm	5.0	RW	Uni				US
0.13	Percentage load	{**4.20**}	±USER_CURRENT_MAX %		RO	Bi	FI	NC	PT	
0.14	Enable sequencer latching	{**6.39**}	OFF (0) or On (1)	On (1)	RW	Bit				US
0.15	T24 digital I/O 1 source/destination	{**8.21**}	Pr **0.00** to **50.99**	Pr **10.02**	RW	Uni	DE		PT	US
0.16	T26 digital I/O 3 source/destination	{**8.23**}	Pr **0.00** to **50.99**	Pr **6.34**	RW	Uni	DE		PT	US
0.17	T29 digital input 6 destination	{**8.24**}	Pr **0.00** to **50.99**	Pr **6.39**	RW	Uni	DE		PT	US
0.18	Stop mode	{**6.01**}	COASt (0), rP (1), no.rP (2)	COASt (1)	RW	Txt				US
0.19	T7 analog input 2 mode	{**7.11**}	0-20 (0), 20-0 (1), 4-20.tr (2), 20-4.tr (3),4-20 (4), 20-4 (5), VOLt (6)	4-20 (4)	RW	Txt				US
0.20	PID 1 feedback source	{**14.04**}	Pr **0.00** to **50.99**	Pr **7.02**	RW	Uni			PT	US
0.21	PID 1 reference source	{**14.03**}	Pr **0.00** to **50.99**	Pr **18.01**	RW	Uni			PT	US
0.22	PID 1 output destination	{**14.16**}	Pr **0.00** to **50.99**	Pr **1.37**	RW	Uni	DE		PT	US
0.23	PID 1 P gain	{**14.10**}	0.000 to 4.000	1.000	RW	Uni				US
0.24	PID 1 I gain	{**14.11**}	0.000 to 4.000	0.500	RW	Uni				US
0.25	PID 1 enable	{**14.08**}	OFF (0) or On (1)	On (1)	RW	Uni				US
0.26	PID 1 optional enable source	{**14-09**}	Pr **0.00** to **50.99**	Pr **8.05**	RW	Uni			PT	US
0.27	PID 1 output scaling factor	{**14.15**}	0.000 to 4.000	1.000	RW	Uni				US
0.33	Catch a spinning motor	{**6.09**}	0 to 1	1	RW	Uni				US
0.59	PID set-point (Application menu 1 power-down saved integer)	{**18.01**}	-32,768 to +32,767	0	RW	Bi		NC		PS

Figure 7-7 Macro 6 logic diagram

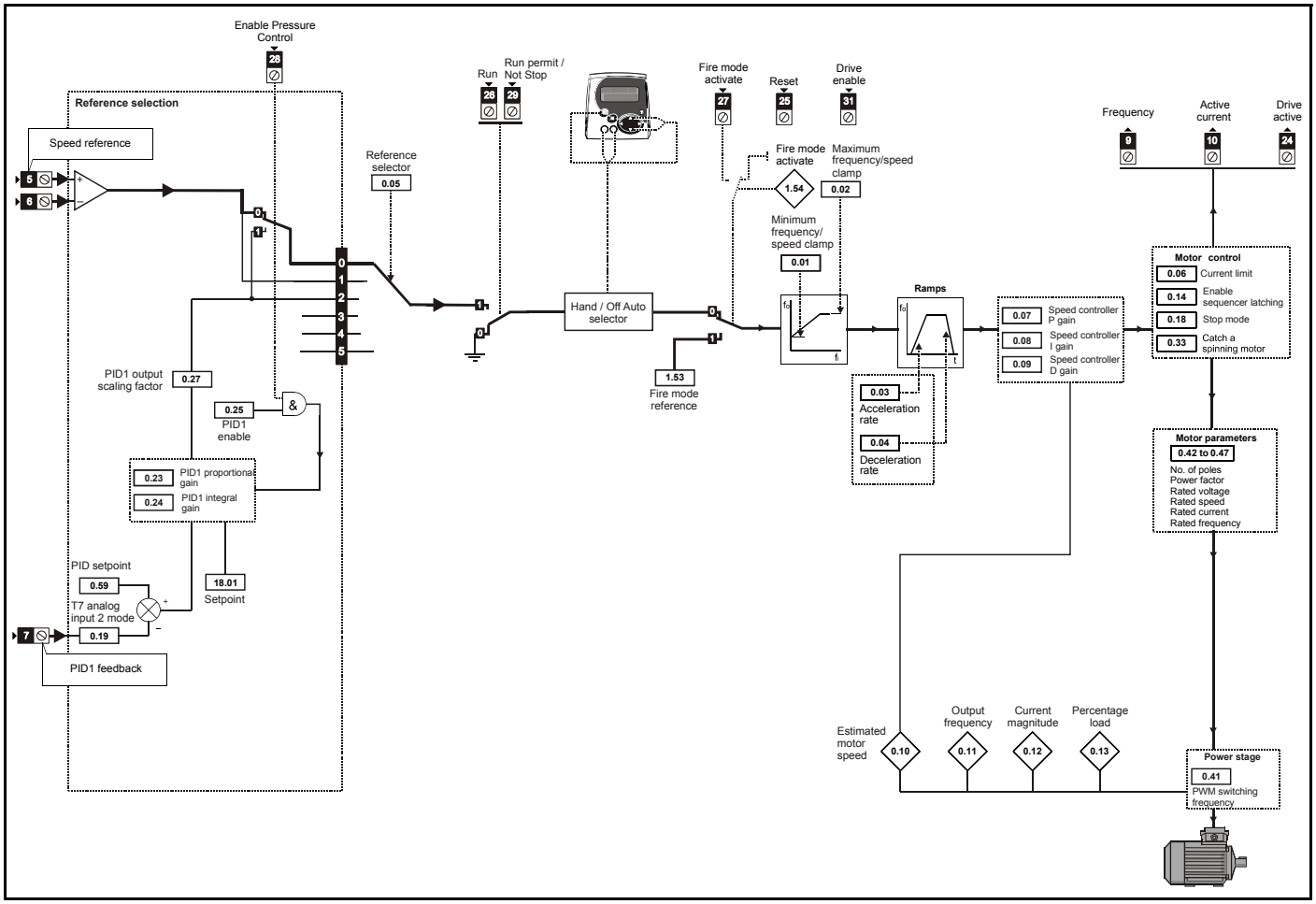

8 Running the motor

This chapter takes the new user through all the essential steps to running a motor for the first time, in each of the possible operating modes.

For information on tuning the drive for the best performance, see Chapter 9 *Optimisation* .

WARNING

Ensure that no damage or safety hazard could arise from the motor starting unexpectedly.

CAUTION

The values of the motor parameters affect the protection of the motor.
The default values in the drive should not be relied upon.
It is essential that the correct value is entered in Pr **0.46** *Motor rated current*. This affects the thermal protection of the motor.

CAUTION

If the keypad mode has been used previously, ensure that the keypad reference has been set to 0 using the buttons as if the drive is started using the keypad it will run to the speed defined by the keypad reference (Pr **0.35**).

WARNING

If the intended maximum speed affects the safety of the machinery, additional independent over-speed protection must be used.

WARNING

Fire Mode - important warning.
When Fire Mode is active the motor overload and thermal protection are disabled, as well as a number of drive protection functions. Fire Mode is provided for use only in emergency situations where the safety risk from disabling protection is less than the risk from the drive tripping - typically in smoke extraction operation to permit evacuation of a building. The use of Fire Mode itself causes a risk of fire from overloading of the motor or drive, so it must only be used after careful consideration of the balance of risks.

Care must be taken to prevent inadvertent activation or de-activation of Fire Mode. Fire Mode is indicated by a flashing display text warning "Fire mode active".

Care must be taken to ensure that parameters Pr **1.53** or Pr **1.54** are not inadvertently re-allocated to different inputs or variables. It should be noted that, by default, Pr **1.54** is controlled from digital input 4 and changing Pr **6.04** or Pr **8.24** can re-allocate this digital input to another parameter. These parameters are at access level 2 in order to minimise the risk of inadvertent or unauthorized changes. It is recommended that User Security be applied to further reduce the risk (see section 5.10 *Parameter access level and security* on page 81). These parameters may also be changed via serial communications so adequate precautions should be taken if this functionality is utilised.

8.1 Quick start Connections

8.1.1 Basic requirements

This section shows the basic connections which must be made for the drive to run in the required mode. For minimal parameter settings to run in each mode please see the relevant part of section 8.4 *Quick Start commissioning* on page 116.

Table 8-1 Minimum control connection requirements for each control mode

Drive control method	Requirements
Terminal mode	Drive Enable Speed reference Run forward or run reverse command
Keypad mode	Drive Enable
Serial communications	Drive Enable Serial communications link

For Solutions Module terminal information see section 12.14 *Menus 15 and 16: Solutions Module set-up* on page 185 or the appropriate Solutions Module option user guide.

8.2 Changing the operating mode

Changing the operating mode returns all parameters to their default value, including the motor parameters. (Pr **0.49** and Pr **0.34** are not affected by this procedure.)

Procedure

Use the following procedure only if a different operating mode is required:

1. Enter either of the following values in Pr **xx.00**, as appropriate:
   1253 (EUR, 50Hz AC supply frequency)
   1254 (USA, 60Hz AC supply frequency)
2. Change the setting of Pr **0.48** as follows:

Pr 0.48 setting		Operating mode
0.48 OPEn LP	1	Open-loop
0.48 rfc	2	RFC mode

The figures in the second column apply when serial communications are used.

3. Either:

- Press the red reset button
- Toggle the reset digital input
- Carry out a drive reset through serial communications by setting Pr **10.38** to 100 (ensure that Pr. **xx.00** returns to 0).

8.3 Changing keypad mode

Pressing the following keypad buttons selects the keypad mode

- Blue - Auto
- Red - Off
- Green - Hand

In Hand mode, the motor speed is adjusted by pressing the keypad up/down arrow buttons.

In Auto mode, the motor speed control reference is determined by the value set in the speed/frequency reference selector Pr **0.05**. If hand mode is selected then the motor speed will not change during the transition.

In Off mode, the motor will be stopped but pressing the keypad up/down arrow buttons will allow the keypad control reference Pr **1.17** to be adjusted. Selecting Hand mode will then ramp the motor up to the selected speed.

Figure 8-1 Minimum connections to get the motor running in any operating mode

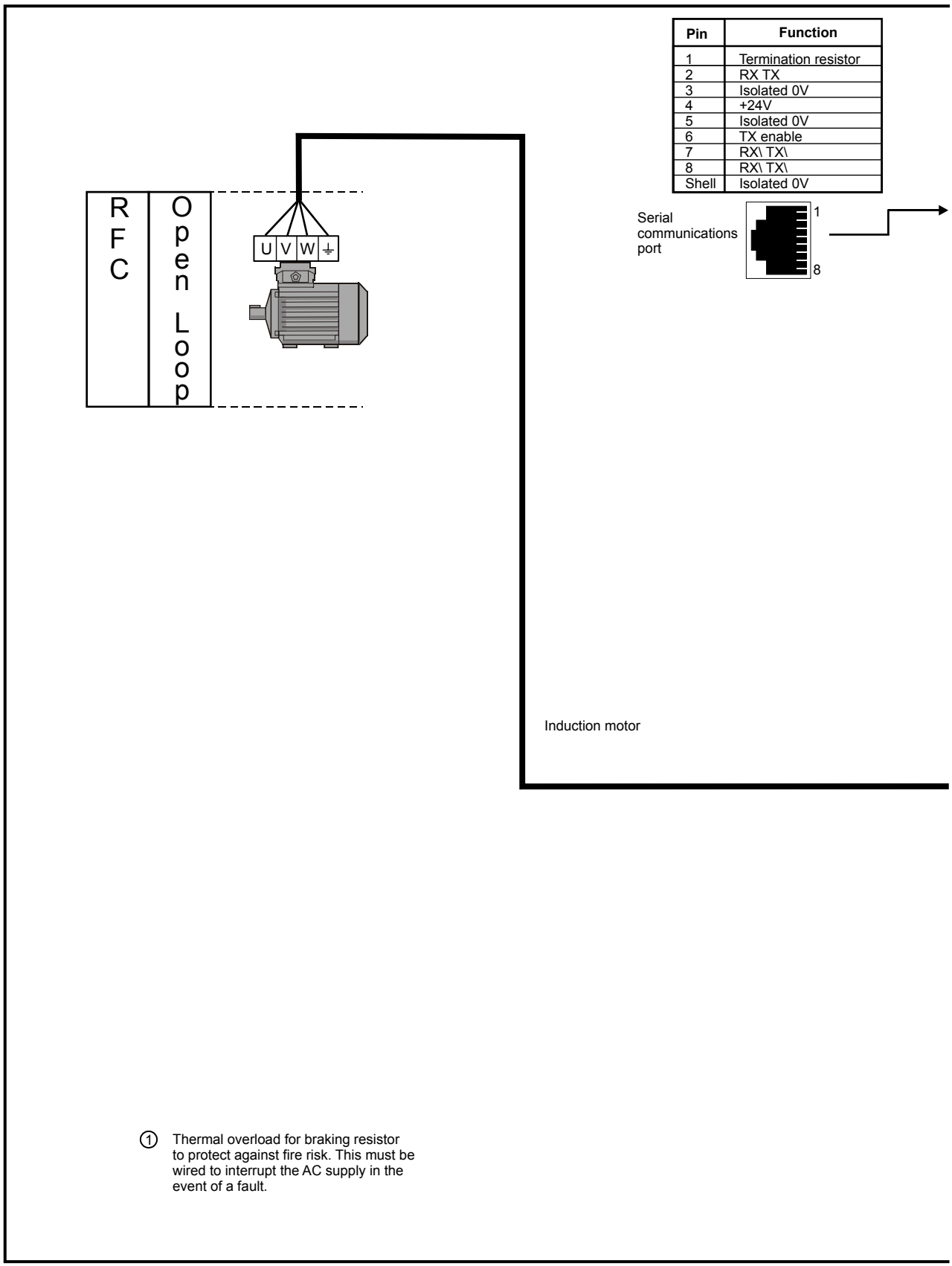

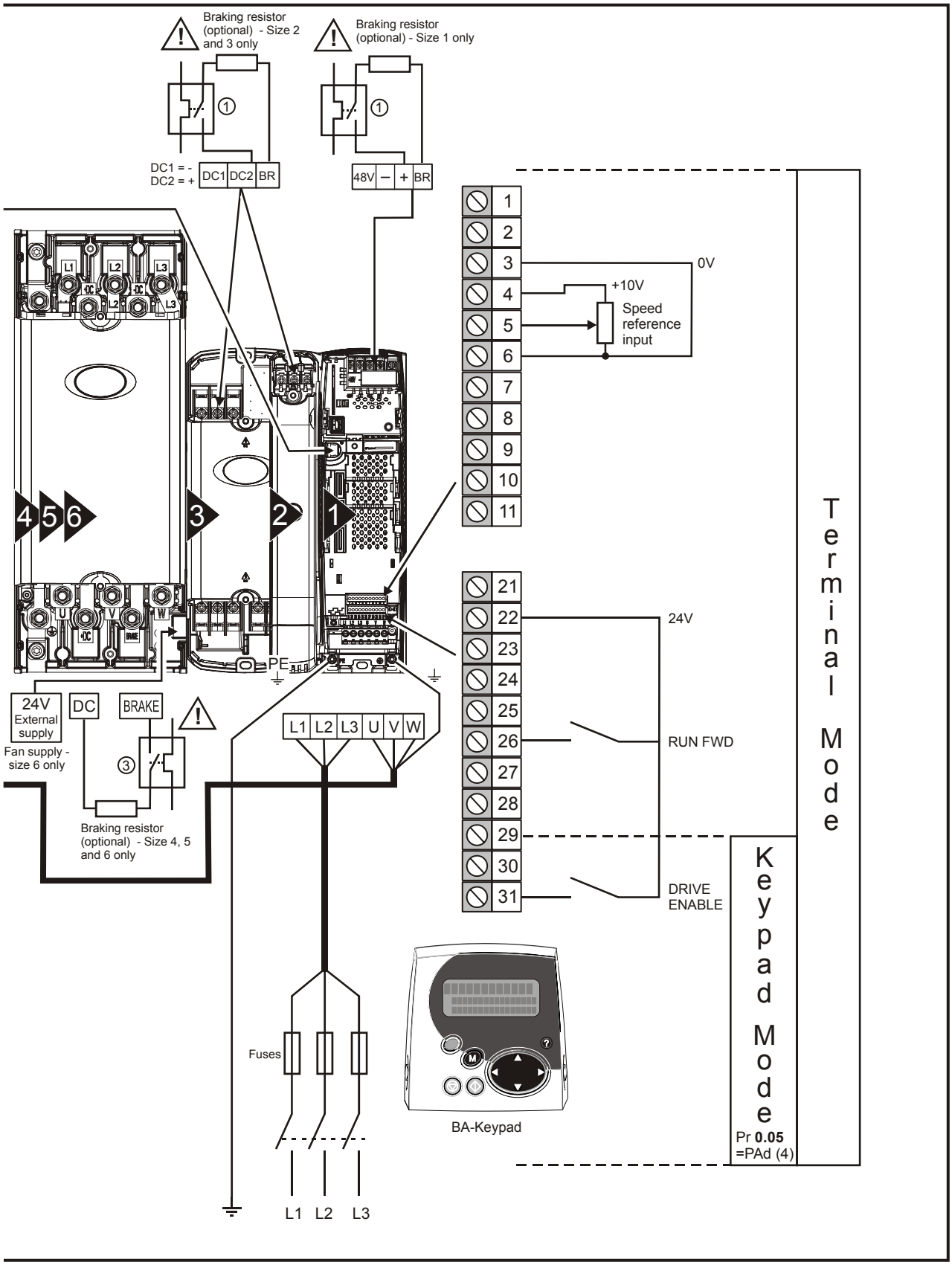
Braking resistor (optional) - Size 2 and 3 only
Braking resistor (optional) - Size 1 only
DC1 = -
DC2 = +
DC1
DC2
BR
48V
–
+
BR
1
2
3
4
5
6
7
8
9
10
11
0V
+10V
Speed reference input
21
22
23
24
25
26
27
28
29
30
31
24V
RUN FWD
DRIVE ENABLE
Terminal Mode
Keypad Mode
Pr **0.05** =PAd (4)
BA-Keypad
24V External supply
Fan supply - size 6 only
DC
BRAKE
Braking resistor (optional) - Size 4, 5 and 6 only
L1 L2 L3 U V W
PE
Fuses
L1 L2 L3

8.4 Quick Start commissioning

8.4.1 Open loop

Action	Detail	
Before power-up	Ensure: • The drive enable signal is not given (terminal 31) • Run signal is not given • Motor is connected	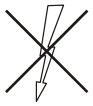
Power-up the drive	Ensure: • Drive displays 'inh' If the drive trips, see Chapter 14 *Diagnostics* on page 235.	
Enter motor nameplate details	Enter: • Motor rated frequency in Pr **0.47** (Hz) • Motor rated current in Pr **0.46** (A) • Motor rated speed in Pr **0.45** (rpm) • Motor rated voltage in Pr **0.44** (V) - check if ⅄ or △ connection	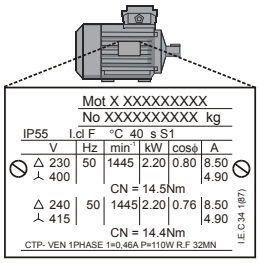
Set maximum frequency	Enter: • Maximum frequency in Pr **0.02** (Hz)	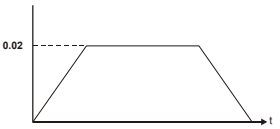
Set acceleration / deceleration rates	Enter: • Acceleration rate in Pr **0.03** (s/100Hz) • Deceleration rate in Pr **0.04** (s/100Hz) (If braking resistor installed, set Pr **0.15** = FAST. Also ensure Pr **10.30** and Pr **10.31** are set correctly, otherwise premature 'It.br' trips may be seen.)	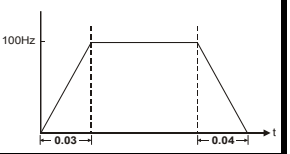
Autotune	The drive is able to perform either a stationary or a rotating autotune. The motor must be at a standstill before an autotune is enabled. A rotating autotune should be used whenever possible so the measured value of power factor of the motor is used by the drive. **WARNING** A rotating autotune will cause the motor to accelerate up to $^2/_3$ base speed in the direction selected regardless of the reference provided. Once complete the motor will coast to a stop. The enable signal must be removed before the drive can be made to run at the required reference. The drive can be stopped at any time by removing the run signal or removing the drive enable. • A stationary autotune can be used when the motor is loaded and it is not possible to uncouple the load from the motor shaft. A stationary autotune measures the stator resistance of the motor and the voltage offset in the drive. These are required for good performance in vector control modes. A stationary autotune does not measure the power factor of the motor so the value on the motor nameplate must be entered into Pr **0.43**. • A rotating autotune should only be used if the motor is uncoupled. A rotating autotune first performs a stationary autotune before rotating the motor at $^2/_3$ base speed in the direction selected. The rotating autotune measures the power factor of the motor. To perform an autotune: • Set Pr **0.40** = 1 for a stationary autotune or set Pr **0.40** = 2 for a rotating autotune • Close the Drive Enable signal (terminal 31). The drive will display 'rdY' or 'Off'. • Press the blue auto or green hand button. The display will flash 'Autotune in progress', while the drive is performing the autotune. • Wait for the drive to display 'rdY' or 'inh' and for the motor to come to a standstill. If the drive trips, see Chapter 14 *Diagnostics* on page 235. Remove the drive enable and run signal from the drive.	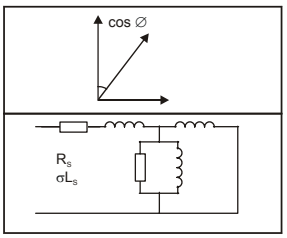
Save parameters	Enter 1000 in Pr **xx.00** Press the red reset button or toggle the reset digital input (ensure Pr **xx.00** returns to 0)	
Run	Drive is now ready to run	

8.4.2 RFC mode

Induction motor

Action	Detail	
Before power-up	Ensure: • Drive Enable signal is not given (terminal 31) • Run signal is not given • Motor and feedback device are connected	
Power-up the drive	Ensure: • Drive displays 'inh' If the drive trips, see Chapter 14 *Diagnostics* on page 235.	
Enter motor nameplate details	Enter: • Motor rated frequency in Pr **0.47** (Hz) • Motor rated current in Pr **0.46** (A) • Motor rated speed (base speed - slip speed) in Pr **0.45** (rpm) • Motor rated voltage in Pr **0.44** (V) - check if ⅄ or △ connection	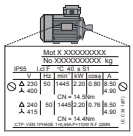
Set maximum speed	Enter: • Maximum speed in Pr **0.02** (rpm)	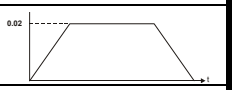
Set acceleration / deceleration rates	Enter: • Acceleration rate in Pr **0.03** (s/1000rpm) • Deceleration rate in Pr **0.04** (s/1000rpm) (If braking resistor installed, set Pr **0.15** = FAST. Also ensure Pr **10.30** and Pr **10.31** are set correctly, otherwise premature 'It.br' trips may be seen.)	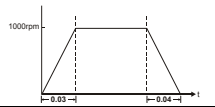
Select or deselect catch a spinning motor mode	If catch a spinning motor mode is not required then set Pr **6.09** to 0. If catch a spinning motor mode is required then leave Pr **6.09** at the default of 1, but depending on the size of the motor the value in Pr **5.40** may need to be adjusted. Pr **5.40** defines a scaling function used by the algorithm that detects the speed of the motor. The default value of Pr **5.40** is 1 which is suitable for small motors (<4kW). For larger motors the value in Pr **5.40** will need to be increased. Approximate values of Pr **5.40** for different motor sizes are as follows, 2 for 11kW, 3 for 55kW and 5 for 150kW. If the value of Pr **5.40** is too large the motor may accelerate from standstill when the drive is enabled. If the value of this parameter is too small the drive will detect the motor speed as zero even if the motor is spinning.	
Autotune	The drive is able to perform either a stationary or a rotating autotune. The motor must be at a standstill before an autotune is enabled. A stationary autotune will give moderate performance whereas a rotating autotune will give improved performance as it measures the actual values of the motor parameters required by the drive. **NOTE** It is highly recommended that a rotating autotune is performed (Pr **0.40** set to 2). A rotating autotune will cause the motor to accelerate up to $^2/_3$ base speed in the direction selected regardless of the reference provided. Once complete the motor will coast to a stop. The enable signal must be removed before the drive can be made to run at the required reference. **WARNING** The drive can be stopped at any time by removing the run signal or removing the drive enable. • A stationary autotune can be used when the motor is loaded and it is not possible to uncouple the load from the motor shaft. The stationary autotune measures the stator resistance and transient inductance of the motor. These are used to calculate the current loop gains, and at the end of the test the values in Pr **0.38** and Pr **0.39** are updated. A stationary autotune does not measure the power factor of the motor so the value on the motor nameplate must be entered into Pr **0.43**. • A rotating autotune should only be used if the motor is uncoupled. A rotating autotune first performs a stationary autotune before rotating the motor at $^2/_3$ base speed in the direction selected. The rotating autotune measures the stator inductance of the motor and calculates the power factor. To perform an autotune: • Set Pr **0.40** = 1 for a stationary autotune or set Pr **0.40** = 2 for a rotating autotune • Close the Drive Enable signal (terminal 31). The drive will display 'rdY' or 'Off'. • Press the blue auto or green hand button. The display will flash 'Autotune in progress', while the drive is performing the autotune. • Wait for the drive to display 'rdY' or 'inh' and for the motor to come to a standstill If the drive trips, see Chapter 14 *Diagnostics* on page 235. Remove the drive enable and run signal from the drive.	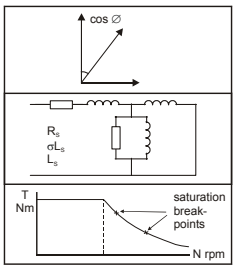
Save parameters	Enter 1000 in Pr **xx.00** Press the red reset button or toggle the reset digital input (ensure Pr **xx.00** returns to 0)	
Run	Drive is now ready to run	

9 Optimisation

This chapter takes the user through methods of optimising the product set-up, maximising performance. The auto-tuning features of the drive simplify this task.

9.1 Motor map parameters

9.1.1 Open loop motor control

Pr 0.46 {5.07} Motor rated current	**Defines the maximum continuous motor current**

The motor rated current parameter must be set to the maximum continuous current of the motor. The motor rated current is used in the following:

- Current limits (see section 9.2 *Current limits* on page 122, for more information)
- Motor thermal overload protection (see section 9.3 *Motor thermal protection* on page 123, for more information)
- Vector mode voltage control (see Voltage mode Pr **0.07**, later in this table)
- Slip compensation (see Slip compensation Pr **5.27**, later in this table)
- Dynamic V/F control

Pr 0.44 {5.09} Motor rated voltage	**Defines the voltage applied to the motor at rated frequency**
Pr 0.47 {5.06} Motor rated frequency	**Defines the frequency at which rated voltage is applied**

The motor rated voltage Pr **0.44** and the motor rated frequency Pr **0.47** are used to define the voltage to frequency characteristic applied to the motor (see voltage mode Pr **0.07**, later in this table). The motor rated frequency is also used in conjunction with the motor rated speed to calculate the rated slip for slip compensation (see motor rated speed Pr **0.45**, later in this table).

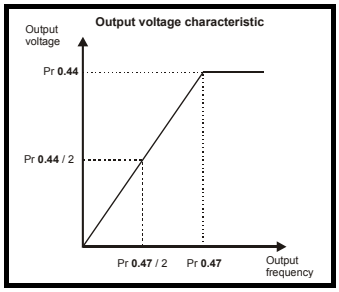

Pr 0.45 {5.08} Motor rated speed	**Defines the full load rated speed of the motor**
Pr 0.42 {5.11} Motor number of poles	**Defines the number of motor poles**

The motor rated speed and the number of poles are used with the motor rated frequency to calculate the rated slip of induction machines in Hz.

Rated slip (Hz) = Motor rated frequency - (Number of pole pairs x [Motor rated speed / 60]) = $\mathbf{0.47} - \left(\frac{\mathbf{0.42}}{\mathbf{2}} \times \frac{\mathbf{0.45}}{\mathbf{60}}\right)$

If Pr **0.45** is set to 0 or to synchronous speed, slip compensation is disabled. If slip compensation is required this parameter should be set to the nameplate value, which should give the correct rpm for a hot machine. Sometimes it will be necessary to adjust this when the drive is commissioned because the nameplate value may be inaccurate. Slip compensation will operate correctly both below base speed and within the field-weakening region. Slip compensation is normally used to correct for the motor speed to prevent speed variation with load. The rated load rpm can be set higher than synchronous speed to deliberately introduce speed droop. This can be useful to aid load sharing with mechanically coupled motors.

Pr **0.42** is also used in the calculation of the motor speed display by the drive for a given output frequency. When Pr **0.42** is set to 'Auto', the number of motor poles is automatically calculated from the rated frequency Pr **0.47**, and the motor rated speed Pr **0.45**.

Number of poles = 120 x (Motor rated frequency Pr **0.47** / Motor rated speed Pr **0.45**) rounded to the nearest even number

Pr 0.43 {5.10} Motor rated power factor	**Defines the angle between the motor voltage and current**

The power factor is the true power factor of the motor, i.e. the angle between the motor voltage and current. The power factor is used in conjunction with the motor rated current Pr **0.46**, to calculate the rated active current and magnetising current of the motor. The rated active current is used extensively to control the drive, and the magnetising current is used in vector mode stator resistance compensation. It is important that this parameter is set up correctly. The drive can measure the motor rated power factor by performing a rotating autotune (see Autotune Pr **0.40**, below).

Pr 0.40 {5.12} Autotune	

There are two autotune tests available in open loop mode, a stationary and a rotating test. A rotating autotune should be used whenever possible so the measured value of power factor of the motor is used by the drive.

- A stationary autotune can be used when the motor is loaded and it is not possible to remove the load from the motor shaft. The stationary test measures the stator resistance (Pr **5.17**) and voltage offset (Pr **5.23**), which are required for good performance in vector control modes (see Voltage mode Pr **0.07**, later in this table). The stationary autotune does not measure the power factor of the motor so the value on the motor nameplate must be entered into Pr **0.43**. To perform a Stationary autotune, set Pr **0.40** to 1, and provide the drive with both an enable signal (on terminal 31) and press the green (Hand) button.
- A rotating autotune should only be used if the motor is unloaded. A rotating autotune first performs a stationary autotune, as above, before rotating the motor at $^{2}/_{3}$ base speed in the direction selected for several seconds (regardless of the speed reference). In addition to the stator resistance (Pr **5.17**) and voltage offset (Pr **5.23**), the rotating autotune measures the power factor of the motor and updates Pr **0.43** with the correct value. To perform a Rotating autotune, set Pr **0.40** to 2, and provide the drive with both an enable signal (on terminal 31) and press the green (Hand) button.

Following the completion of an autotune test the drive will go into the inhibit state. The drive must be placed into a controlled disable condition before the drive can be made to run at the required reference. The drive can be put in to a controlled disable condition by removing the Drive enable signal from terminal 31, setting the drive enable parameter Pr **6.15** to OFF (0) or disabling the drive via the control word (Pr **6.42** & Pr **6.43**).

Pr 0.07 {5.14} Voltage mode

There are six voltage modes available which fall into two categories, vector control and fixed boost.

Vector control

Vector control mode provides the motor with a linear voltage characteristic from 0Hz to motor rated frequency (Pr **0.47**), and then a constant voltage above motor rated frequency. When the drive operates between motor rated frequency/50 and motor rated frequency/4, full vector based stator resistance compensation is applied. When the drive operates between motor rated frequency/4 and motor rated frequency/2 the stator resistance compensation is gradually reduced to zero as the frequency increases. For the vector modes to operate correctly the motor rated power factor (Pr **0.43**), stator resistance (Pr **5.17**) and voltage offset (Pr **5.23**) are all required to be set up accurately. The drive can be made to measure these by performing an autotune (see Pr **0.40** Autotune). The drive can also be made to measure the stator resistance and voltage offset automatically every time the drive is enabled or the first time the drive is enabled after it is powered up, by selecting one of the vector control voltage modes.

(0) **Ur_S** = The stator resistance and the voltage offset are measured and the parameters for the selected motor map are over-written each time the drive is made to run. This test can only be done with a stationary motor where the flux has decayed to zero. Therefore this mode should only be used if the motor is guaranteed to be stationary each time the drive is made to run. To prevent the test from being done before the flux has decayed there is a period of 1 second after the drive has been in the ready state during which the test is not done if the drive is made to run again. In this case, previously measured values are used. Ur_s mode ensures that the drive compensates for any change in motor parameters due to changes in temperature. The new values of stator resistance and voltage offset are not automatically saved to the drive's EEPROM.

(4) **Ur_I** = The stator resistance and voltage offset are measured when the drive is first made to run after each power-up. This test can only be done with a stationary motor. Therefore this mode should only be used if the motor is guaranteed to be stationary the first time the drive is made to run after each power-up. The new values of stator resistance and voltage offset are not automatically saved to the drive's EEPROM.

(1) **Ur** = The stator resistance and voltage offset are not measured. The user can enter the motor and cabling resistance into the stator resistance parameter (Pr **5.17**). However this will not include resistance effects within the drive inverter. Therefore if this mode is to be used, it is best to use an autotune test initially to measure the stator resistance and voltage offset.

(3) **Ur_Auto**= The stator resistance and voltage offset are measured once, the first time the drive is made to run. After the test has been completed successfully the voltage mode (Pr **0.07**) is changed to Ur mode. The stator resistance (Pr **5.17**) and voltage offset (Pr **5.23**) parameters are written to, and along with the voltage mode (Pr **0.07**), are saved in the drive's EEPROM. If the test fails, the voltage mode will stay set to Ur_Auto and the test will be repeated next time the drive is made to run.

Fixed boost

Neither the stator resistance nor the voltage offset are used in the control of the motor, instead a fixed characteristic with low frequency voltage boost as defined by parameter Pr **0.08**, is used. Fixed boost mode should be used when the drive is controlling multiple motors. There are two settings of fixed boost available:

(2) **Fd** = This mode provides the motor with a linear voltage characteristic from 0Hz to rated frequency (Pr **0.47**), and then a constant voltage above rated frequency.

(5) **SrE** = This mode provides the motor with a square law voltage characteristic from 0Hz to rated frequency (Pr **0.47**), and then a constant voltage above rated frequency. This mode is suitable for variable torque applications like fans and pumps where the load is proportional to the square of the speed of the motor shaft. This mode should not be used if a high starting torque is required.

For both these modes, at low frequencies (from 0Hz to ½ x Pr **0.47**) a voltage boost is applied defined by Pr **0.08** as shown below:

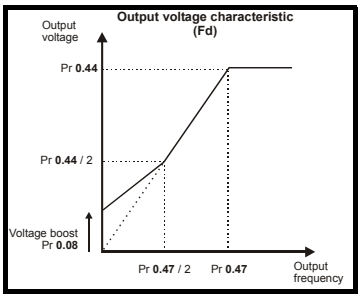

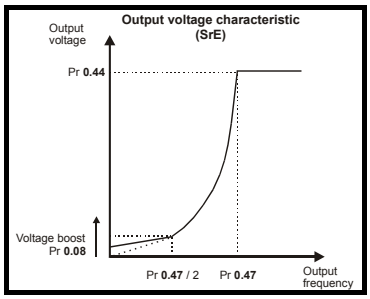

Pr 5.27 Slip compensation

When a motor, being controlled in open loop mode, has load applied a characteristic of the motor is that the output speed droops in proportion to the load applied as shown:

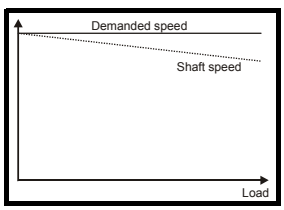

In order to prevent the speed droop shown above slip compensation should be enabled.

To enable slip compensation Pr **5.27** must be set to a 1 (this is the default setting), and the motor rated speed must be entered in Pr **0.45** (Pr **5.08**). The motor rated speed parameter should be set to the synchronous speed of the motor minus the slip speed. This is normally displayed on the motor nameplate, i.e. for a typical 18.5kW, 50Hz, 4 pole motor, the motor rated speed would be approximately 1465rpm. The synchronous speed for a 50Hz, 4 pole motor is 1500rpm, so therefore the slip speed would be 35rpm.

If the synchronous speed is entered in Pr **0.45**, slip compensation will be disabled. If too small a value is entered in Pr **0.45**, the motor will run faster than the demanded frequency.

The synchronous speeds for 50Hz motors with different numbers of poles are as follows:

2 pole = 3000rpm, 4 pole = 1500rpm, 6pole =1000rpm, 8 pole = 750rpm

9.1.2 RFC mode

Software V01.10.00 or later should be used for RFC mode.

Pr 0.46 {5.07} Motor rated current	**Defines the maximum motor continuous current**

The motor rated current parameter must be set to the maximum continuous current of the motor. The motor rated current is used in the following:

- Current limits (see section 9.2 *Current limits* on page 122, for more information)
- Motor thermal overload protection (see section 9.3 *Motor thermal protection* on page 123, for more information)
- Vector control algorithm

Pr 0.44 {5.09} Motor rated voltage	**Defines the voltage applied to the motor at rated frequency**
Pr 0.47 {5.06} Motor rated frequency	**Defines the frequency at which rated voltage is applied**

The motor rated voltage Pr **0.44** and the motor rated frequency Pr **0.47** are used to define the relationship between the voltage and frequency applied to the motor, as shown.

The motor rated voltage is used by the field controller to limit the voltage applied to the motor. Normally this is set to the nameplate value. To allow current control to be maintained, it is necessary for the drive to leave some 'headroom' between the motor terminal voltage and the maximum available drive output voltage. For good transient performance at high speed, the motor rated voltage should be set below 95% of the minimum supply voltage to the drive.

The motor rated voltage and motor rated frequency are also used during the rotating autotune test (see Autotune Pr **0.40** later in this table) and in the calculations required for automatic optimisation of the motor rated speed (see Motor rated speed optimisation Pr **5.16**, later in this table). Therefore, it is important that the correct value for motor rated voltage is used.

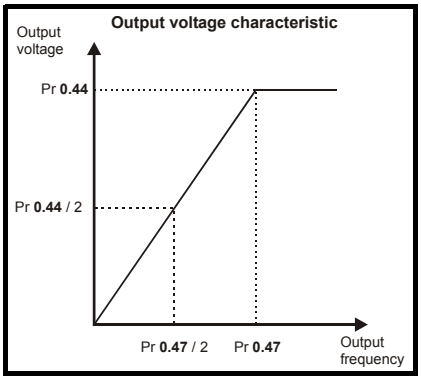

Pr 0.45 {5.08} Motor rated speed	**Defines the full load rated speed of the motor**
Pr 0.42 {5.11} Motor number of poles	**Defines the number of motor poles**

The motor rated speed and motor rated frequency are used to determine the full load slip of the motor which is used by the vector control algorithm. Incorrect setting of this parameter has the following effects:

- Reduced efficiency of motor operation
- Reduction of maximum torque available from the motor
- Reduced transient performance
- Inaccurate control of absolute torque in torque control modes

The nameplate value is normally the value for a hot motor; however, some adjustment may be required when the drive is commissioned if the nameplate value is inaccurate. Either a fixed value can be entered in this parameter or an optimisation system may be used to automatically adjust this parameter (see Motor rated speed autotune Pr **5.16**, later in this table).

When Pr **0.42** is set to 'Auto', the number of motor poles is automatically calculated from the motor rated frequency Pr **0.47**, and the motor rated speed Pr **0.45**

Number of poles = 120 x (Motor rated frequency Pr **0.47** / Motor rated speed Pr **0.45**) rounded to the nearest even number

Pr 0.43 {5.10} Motor rated power factor	**Defines the angle between the motor voltage and current**

The power factor is the true power factor of the motor, i.e. the angle between the motor voltage and current. If the stator inductance is set to zero (Pr **5.25**) then the power factor is used in conjunction with the motor rated current Pr **0.46** and other motor parameters to calculate the rated active and magnetising currents of the motor, which are used in the vector control algorithm. If the stator inductance has a non-zero value this parameter is not used by the drive, but is continuously written with a calculated value of power factor. The stator inductance can be measured by the drive by performing a rotating autotune (see Autotune Pr **0.40**, later in this table).

Pr 0.40 {5.12} Autotune

There are three autotune tests available in RFC mode, a stationary test, a rotating test and an inertia measurement test. A stationary autotune will give moderate performance whereas a rotating autotune will give improved performance as it measures the actual values of the motor parameters required by the drive. An inertia measurement test should be performed separately to a stationary or rotating autotune.

NOTE

It is highly recommended that a rotating autotune is performed (Pr **0.40** set to 2).

- A stationary autotune can be used when the motor is loaded and it is not possible to remove the load from the motor shaft. The stationary autotune measures the stator resistance (Pr **5.17**) and transient inductance (Pr **5.24**) of the motor. These are used to calculate the current loop gains, and at the end of the test the values in Pr **4.13** and Pr **4.14** are updated. A stationary autotune does not measure the power factor of the motor so the value on the motor nameplate must be entered into Pr **0.43**. To perform a Stationary autotune, set Pr **0.40** to 1, and provide the drive with both an enable signal (on terminal 31) and press the green (Hand) button.
- A rotating autotune should only be used if the motor is unloaded. A rotating autotune first performs a stationary autotune before rotating the motor at $^{2}/_{3}$ of motor rated frequency in the direction selected for approximately 30s. During the rotating autotune the stator inductance (Pr **5.25**), and the motor saturation breakpoints (Pr **5.29** and Pr **5.30**) are modified by the drive. The power factor is also modified for user information only, but is not used after this point as the stator inductance is used in the vector control algorithm instead. To perform a Rotating autotune, set Pr **0.40** to 2, and provide the drive with both an enable signal (on terminal 31) and press the green (Hand) button.
- The inertia measurement test can measure the total inertia of the load and the motor. This is used to set the speed loop gains (see *Speed loop gains*) and to provide torque feed-forwards when required during acceleration.
  During the inertia measurement test the drive attempts to accelerate the motor in the direction selected up to $^{3}/_{4}$ x rated load rpm and then back to standstill. The drive uses rated torque/16, but if the motor cannot be accelerated to the required speed the drive then increases the torque progressively to $x^{1}/_{8}$, $x^{1}/_{4}$, $x^{1}/_{2}$ and x1 rated torque. If the required speed is not achieved on the final attempt the test is aborted and a tunE1 trip is initiated. If the test is successful the acceleration and deceleration times are used to calculate the motor and load inertia which is then written to Pr **3.18**. The motor map parameters must be set up correctly including the power factor before performing an inertia measurement test.
  To perform an Inertia measurement autotune, set Pr **0.40** to 3, and provide the drive with both an enable signal (on terminal 31) and a run signal.

Following the completion of an autotune test the drive will go into the inhibit state. The drive must be placed into a controlled disable condition before the drive can be made to run at the required reference. The drive can be put in to a controlled disable condition by removing the Drive enable signal from terminal 31, setting the drive enable parameter Pr **6.15** to OFF (0) or disabling the drive via the control word (Pr **6.42** & Pr **6.43**).

Pr 0.38 {4.13} / Pr 0.39 {4.14} Current loop gains

The current loop gains proportional (Kp) and integral (Ki) gains control the response of the current loop to a change in current (torque) demand. The default values give satisfactory operation with most motors. However, for optimal performance in dynamic applications it may be necessary to change the gains to improve the performance. The proportional gain (Pr **4.13**) is the most critical value in controlling the performance. The values for the current loop gains can be calculated by one of the following:

- During a stationary or rotating autotune (see *Autotune Pr **0.40***, earlier in this table) the drive measures the stator resistance (Pr **5.17**) and transient inductance (Pr **5.24**) of the motor and calculates the current loop gains.
- By setting Pr **0.40** to 4 the drive will calculate the current loop gains from the values of stator resistance (Pr **5.17**) and transient inductance (Pr **5.24**) set in the drive.

This will give a step response with minimum overshoot after a step change of current reference. The proportional gain can be increased by a factor of 1.5 giving a similar increase in bandwidth; however, this gives a step response with approximately 12.5% overshoot. The equation for the integral gain gives a conservative value. In some applications where it is necessary for the reference frame used by the drive to dynamically follow the flux very closely (i.e. high speed RFC induction motor applications) the integral gain may need to have a significantly higher value.

Pr 3.42 Drive encoder filter

In RFC mode Pr **3.42** defines a filter on the output of the speed estimator which is used as the speed feedback. A filter with a 4ms time constant is always present on the output of the speed estimator, but this filter may be extended as follows:

0 = 4ms, 1 = 8ms, 2 = 16ms, 3 = 32ms, 4 = 64ms, 5 = 128ms.

The output of the speed estimator can include some ripple, which increases as the drive passes into field weakening and the filter can be used to remove this ripple. This is particularly useful when using standard ramp or spinning start with a low friction, high inertia load, and can prevent over voltage trips when the drive has no braking resistor.

Pr 5.40 Spin start boost

If Pr **6.09** is set to enable the catch a spinning motor function in open-loop mode or RFC modes, this parameter defines a scaling function used by the algorithm that detects the speed of the motor. It is likely that for smaller motors (~4kW) the default value of 1.0 is suitable, but for larger motors this parameter may need to be increased. If the value of this parameter is too large the motor may accelerate from standstill when the drive is enabled. If the value of this parameter is too small the drive will detect the motor speed as zero even if the motor is spinning.

Speed loop gains (Pr 0.07 {3.10}, Pr 0.08 {3.11}, Pr 0.09 {3.12})

The speed loop gains control the response of the speed controller to a change in speed demand. The speed controller includes proportional (Kp) and integral (Ki) feed forward terms, and a differential (Kd) feedback term. The drive holds two sets of these gains and either set may be selected for use by the speed controller with Pr **3.16**. If Pr **3.16** = 0, gains Kp1, Ki1 and Kd1 (Pr **0.07** to Pr **0.09**) are used, and if Pr **3.16** = 1, gains Kp2, Ki2 and Kd2 (Pr **3.13** to Pr **3.15**) are used. Pr **3.16** may be changed when the drive is enabled or disabled. If the load is predominantly a constant inertia and constant torque, the drive can calculate the required Kp and Ki gains to give a required compliance angle or bandwidth dependant on the setting of Pr **3.17**.

*Proportional gain (Kp), Pr **0.07 {3.10}** and Pr **3.13***

If the proportional gain has a value and the integral gain is set to zero the controller will only have a proportional term, and there must be a speed error to produce a torque reference. Therefore as the motor load increases there will be a difference between the reference and actual speeds. This effect, called regulation, depends on the level of the proportional gain, the higher the gain the smaller the speed error for a given load. If the proportional gain is too high either the acoustic noise produced by speed feedback quantisation becomes unacceptable, or the stability limit is reached.

*Integral gain (Ki), Pr **0.08 {3.11}** and Pr **3.14***

The integral gain is provided to prevent speed regulation. The error is accumulated over a period of time and used to produce the necessary torque demand without any speed error. Increasing the integral gain reduces the time taken for the speed to reach the correct level and increases the stiffness of the system, i.e. it reduces the positional displacement produced by applying a load torque to the motor. Unfortunately increasing the integral gain also reduces the system damping giving overshoot after a transient. For a given integral gain the damping can be improved by increasing the proportional gain. A compromise must be reached where the system response, stiffness and damping are all adequate for the application. For RFC mode, it is unlikely that the integral gain can be increased much above 0.50.

*Differential gain (Kd), Pr **0.09 {3.12}** and Pr **3.15***

The differential gain is provided in the feedback of the speed controller to give additional damping. The differential term is implemented in a way that does not introduce excessive noise normally associated with this type of function. Increasing the differential term reduces the overshoot produced by under-damping, however, for most applications the proportional and integral gains alone are sufficient.

There are three methods of tuning the speed loop gains dependant on the setting of Pr **3.17**:

1. Pr **3.17** = 0, User set-up.
   This involves the connecting of an oscilloscope to analog output 1 to monitor the speed feedback.
   Give the drive a step change in speed reference and monitor the response of the drive on the oscilloscope.
   The proportional gain (Kp) should be set up initially. The value should be increased up to the point where the speed overshoots and then reduced slightly.
   The integral gain (Ki) should then be increased up to the point where the speed becomes unstable and then reduced slightly.
   It may now be possible to increase the proportional gain to a higher value and the process should be repeated until the system response matches the ideal response as shown.
   The diagram shows the effect of incorrect P and I gain settings as well as the ideal response.
2. Pr **3.17** = 1, Bandwidth set-up
   If bandwidth based set-up is required, the drive can calculate Kp and Ki if the following parameters are set up correctly:
   Pr **3.20** - Required bandwidth,
   Pr **3.21** - Required damping factor,
   Pr **3.18** - Motor and load inertia. The drive can be made to measure the motor and load inertia by performing an inertia measurement autotune (see Autotune Pr **0.40**, earlier in this table).
3. Pr **3.17** = 2, Compliance angle set-up
   If compliance angle based set-up is required, the drive can calculate Kp and Ki if the following parameters are set up correctly:
   Pr **3.19** - Required compliance angle,
   Pr **3.21** - Required damping factor,
   Pr **3.18** - Motor and load inertia The drive can be made to measure the motor and load inertia by performing an inertia measurement autotune (see Autotune Pr **0.40**, earlier in this table).

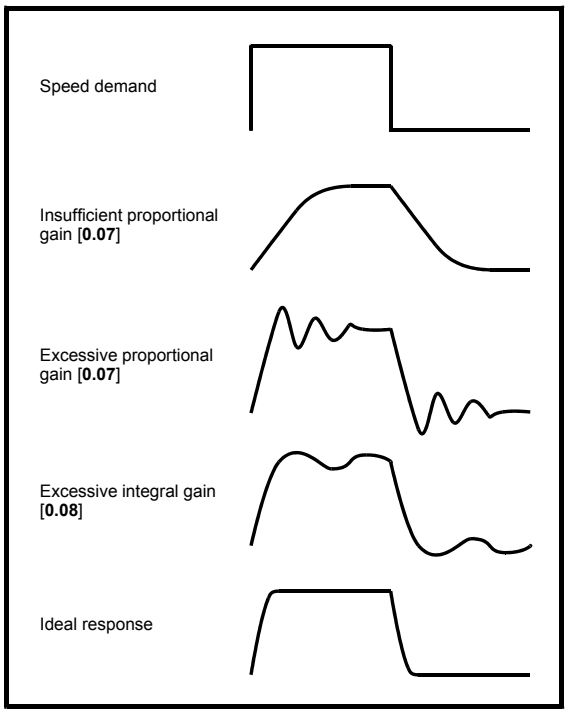

9.2 Current limits

The default settings for the current limit parameters are:

- 113% x motor rated current for open loop mode
- 114% x motor rated current for RFC mode

There are three parameters which control the current limits:

- Motoring current limit: power flowing from the drive to the motor
- Regen current limit: power flowing from the motor to the drive
- Symmetrical current limit: current limit for both motoring and regen operation

The lowest of either the motoring and regen current limit, or the symmetrical current limit applies.

The maximum setting of these parameters depends on the values of motor rated current, drive rated current and the power factor.

The drive can be oversized to permit a higher current limit setting to provide higher accelerating torque as required up to a maximum of 1000%.

9.3 Motor thermal protection

The drive models the temperature of the motor using the motor rated current (Pr **5.07**), the thermal time constant (Pr **4.15**), whether low speed thermal protection mode has been enabled (Pr **4.25**) and the actual current flowing at any point in time. Pr **4.19** gives the estimated motor temperature as a percentage of maximum temperature.

The temperature of the motor (Pr **4.19**) as a percentage of maximum temperature, with a constant current magnitude of I, constant value of K and constant value of Motor rated current (Pr **5.07**) after time t is given by:

$$\text{Percentage motor temperature (Pr 4.19)} = [I^2 / (K \times \text{Motor rated current})^2] (1 - e^{-t/\tau}) \times 100\%$$

This assumes that the maximum allowed motor temperature is produced by K x Motor rated current and that τ is the thermal time constant of the point in the motor that reaches its maximum allowed temperature first. τ is defined by Pr **4.15**. If Pr **4.15** has a value between 0.0 and 1.0 the thermal time constant is taken as 1.0.

The value of K is defined as shown in Figure 9-1.

Pr **4.25** can be used to select two alternative protection characteristics.

If Pr **4.25** is 0 the characteristic is for a motor which can operate at rated current over the whole speed range. Induction motors with this type of characteristic normally have forced cooling. If Pr **4.25** is 1 the characteristic is intended for motors where the cooling effect of motor fan reduces with reduced motor speed below 50% of base speed/ frequency. The maximum value for K is 1.05, so that above the knee of the characteristics the motor can operate continuously up to 105% current.

Figure 9-1 Motor thermal protection

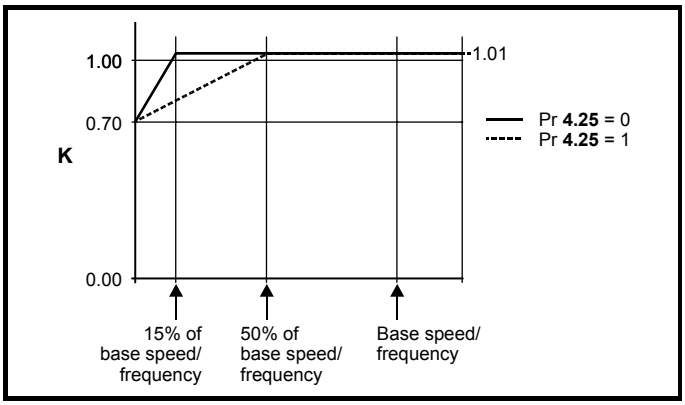

Both settings of Pr **4.25** are intended for motors where the cooling effect of the motor fan reduces with reduced motor speed, but with different speeds below which the cooling effect is reduced. If Pr **4.25** is 0 the characteristic is intended for motors where the cooling effect reduces with motor speed below 15% of base speed/frequency. If Pr **4.25** is 1 the characteristic is intended for motors where the cooling effect reduces with motor speed below 50% of base speed/frequency. The maximum value for K is 1.01, so that above the knee of the characteristics the motor can operate continuously up to 101% current.

When the estimated temperature in Pr **4.19** reaches 100% the drive takes some action depending on the setting of Pr **4.16**. If Pr **4.16** is 0, the drive trips when Pr **4.19** reaches 100%. If Pr **4.16** is 1, the current limit is reduced to (K - 0.05) x 100% when Pr **4.19** reaches 100%. The current limit is set back to the user defined level when Pr **4.19** falls below 95%. The thermal model temperature accumulator is reset to zero at power-up and accumulates the temperature of the motor while the drive remains powered-up. If the rated current defined by Pr **5.07** is altered, the accumulator is reset to zero.

The default setting of the thermal time constant (Pr **4.15**) is 89s, which is equivalent to an overload of 150% for 60s from cold.

The time for the drive to trip from cold with constant motor current is given by:

$$T_{trip} = -(\text{Pr } \mathbf{4.15}) \times \ln(1 - (K \times \text{Pr } \mathbf{5.07} / \text{Pr } \mathbf{4.01})^2)$$

Alternatively the thermal time constant can be calculated from the trip time with a given current from:

$$\text{Pr } \mathbf{4.15} = -T_{trip} / \ln(1 - (K / \text{Overload})^2)$$

The maximum value for the thermal time constant can be increased up to a maximum value of 3000s to allow an increased overload if the motor thermal characteristics permit.

WARNING

Fire Mode - important warning.
When Fire Mode is active the motor overload and thermal protection are disabled, as well as a number of drive protection functions. Fire Mode is provided for use only in emergency situations where the safety risk from disabling protection is less than the risk from the drive tripping - typically in smoke extraction operation to permit evacuation of a building. The use of Fire Mode itself causes a risk of fire from overloading of the motor or drive, so it must only be used after careful consideration of the balance of risks.

Care must be taken to prevent inadvertent activation or de-activation of Fire Mode. Fire Mode is indicated by a flashing display text warning "Fire mode active".

Care must be taken to ensure that parameters Pr **1.53** or Pr **1.54** are not inadvertently re-allocated to different inputs or variables. It should be noted that, by default, Pr **1.54** is controlled from digital input 4 and changing Pr **6.04** or Pr **8.24** can re-allocate this digital input to another parameter. These parameters are at access level 2 in order to minimise the risk of inadvertent or unauthorized changes. It is recommended that User Security be applied to further reduce the risk (see section 5.10 *Parameter access level and security* on page 81). These parameters may also be changed via serial communications so adequate precautions should be taken if this functionality is utilised.

9.4 Switching frequency

The default switching frequency is 3kHz, however this can be increased up to a maximum of 16kHz by Pr **5.18** (dependent on drive size). The available switching frequencies are shown below.

Table 9-1 Available switching frequencies

Drive size	Model	3kHz	4kHz	6kHz	8kHz	12kHz	16kHz
1	All	✓	✓	✓	✓	✓	✓
2	All	✓	✓	✓	✓	✓	✓
3	BA320X	✓	✓	✓	✓	✓	
	BA3401 & BA3402	✓	✓	✓	✓	✓	✓
	BA3403	✓	✓	✓	✓	✓	
	BA350X	✓	✓	✓	✓		
4	All	✓	✓	✓	✓		
5	All	✓	✓	✓	✓		
6	All	✓	✓	✓			

If switching frequency is increased from 3kHz the following apply:

1. Increased heat loss in the drive, which means that derating to the output current must be applied.
   See the derating tables for switching frequency and ambient temperature in section 13.1.1 *Power and current ratings (Derating for switching frequency and temperature)* on page 219.
2. Reduced heating of the motor - due to improved output waveform quality.

3. Reduced acoustic noise generated by the motor.
4. Increased sample rate on the speed and current controllers. A trade off must be made between motor heating, drive heating and the demands of the application with respect to the sample time required.

Table 9-2 Sample rates for various control tasks at each switching frequency

	3, 6, 12 kHz	4, 8, 16 kHz	Open loop	RFC
Level 1	3kHz = 167µs 6kHz = 83µs 12kHz = 83µs	125µs	Peak limit	Current controllers
Level 2	250µs		Current limit and ramps	Speed controller and ramps
Level 3	1ms		Voltage controller	
Level 4	4ms		Time critical user interface	
Background			Non-time critical user interface	

9.5 High speed operation

9.5.1 Field weakening (constant power) operation

The drive can be used to run an induction machine above synchronous speed into the constant power region. The speed continues to increase and the available shaft torque reduces. The characteristics below show the torque and output voltage characteristics as the speed is increased above the rated value.

Figure 9-2 Torque and rated voltage against speed

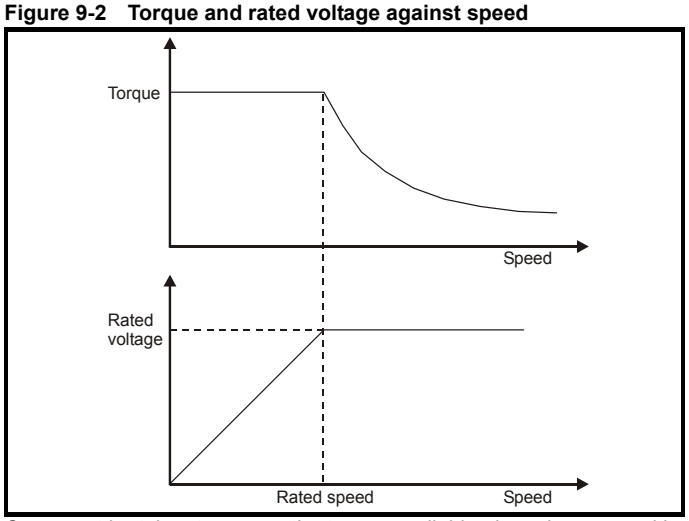

Care must be taken to ensure the torque available above base speed is sufficient for the application to run satisfactorily.

The saturation breakpoint parameters (Pr **5.29** and Pr **5.30**) found during the autotune in RFC mode ensure the magnetising current is reduced in the correct proportion for the specific motor. (In open loop mode the magnetising current is not actively controlled.)

9.5.2 Switching frequency

With a default switching frequency of 3 kHz the maximum output frequency should be limited to 250 Hz. Ideally a minimum ratio of 12:1 should be maintained between the output frequency and the switching frequency. This ensures the number of switchings per cycle is sufficient to ensure the output waveform quality is maintained at a minimum level. If this is not possible, quasi-square switching should be enabled (Pr **5.20** =1). The output waveform will be quasi square above base speed ensuring a symmetrical output waveform, which results in a better quality output than would otherwise result.

9.5.3 Maximum speed / frequency

In open loop mode the maximum frequency is 3,000 Hz.

In RFC mode the maximum output frequency is 400 Hz.

9.5.4 Quasi-Square wave (open-loop only)

The maximum output voltage level of the drive is normally limited to an equivalent of the drive input voltage minus voltage drops within the drive (the drive will also retain a few percent of the voltage in order to maintain current control). If the motor rated voltage is set at the same level as the supply voltage, some pulse deletion will occur as the drive output voltage approaches the rated voltage level. If Pr **5.20** (Quasi-square wave enable) is set to 1 the modulator will allow over modulation, so that as the output frequency increases beyond the rated frequency the voltage continues to increase above the rated voltage. The modulation depth will increase beyond unity; first producing trapezoidal and then quasi-square waveforms.

This can be used for example:

- To obtain high output frequencies with a low switching frequency which would not be possible with space vector modulation limited to unity modulation depth,

or

- In order to maintain a higher output voltage with a low supply voltage.

The disadvantage is that the machine current will be distorted as the modulation depth increases above unity, and will contain a significant amount of low order odd harmonics of the fundamental output frequency. The additional low order harmonics cause increased losses and heating in the motor.

10 SMARTCARD operation

10.1 Introduction

This is a standard feature that enables simple configuration of parameters in a variety of ways. The SMARTCARD can be used for:

- Parameter cloning between drives
- Saving whole drive parameter sets
- Saving 'differences from default' parameter sets
- Storing Onboard PLC programs
- Automatically saving all user parameter changes for maintenance purposes
- Loading complete motor map parameters
- Loading complete predefined macros

The SMARTCARD is located at the top of the module under the drive display (if installed) on the left-hand side. Ensure the SMARTCARD is inserted with the contacts facing the right-hand side of the drive.

The drive only communicates with the SMARTCARD when commanded to read or write, meaning the card may be "hot swapped".

The SMARTCARD supplied with the drive contains 6 predefined application macros. See Chapter 7 *Macros* on page 99 for further information.

Figure 10-1 Installation of the SMARTCARD

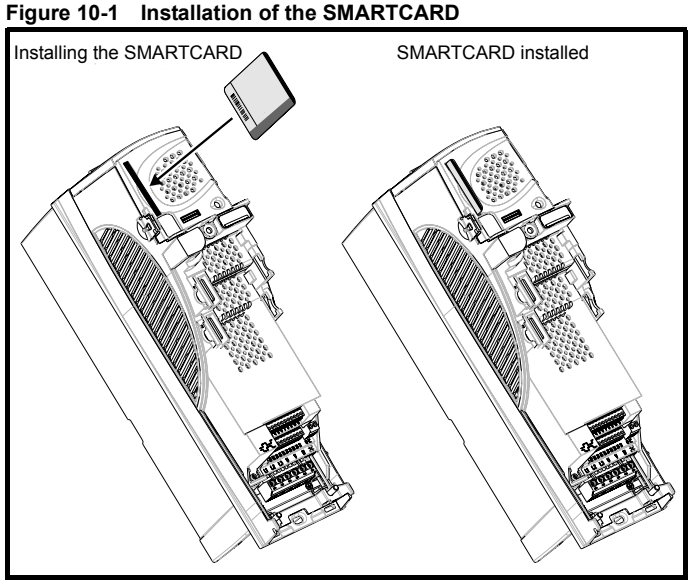

Easy saving and reading

Figure 10-2 Basic SMARTCARD operation

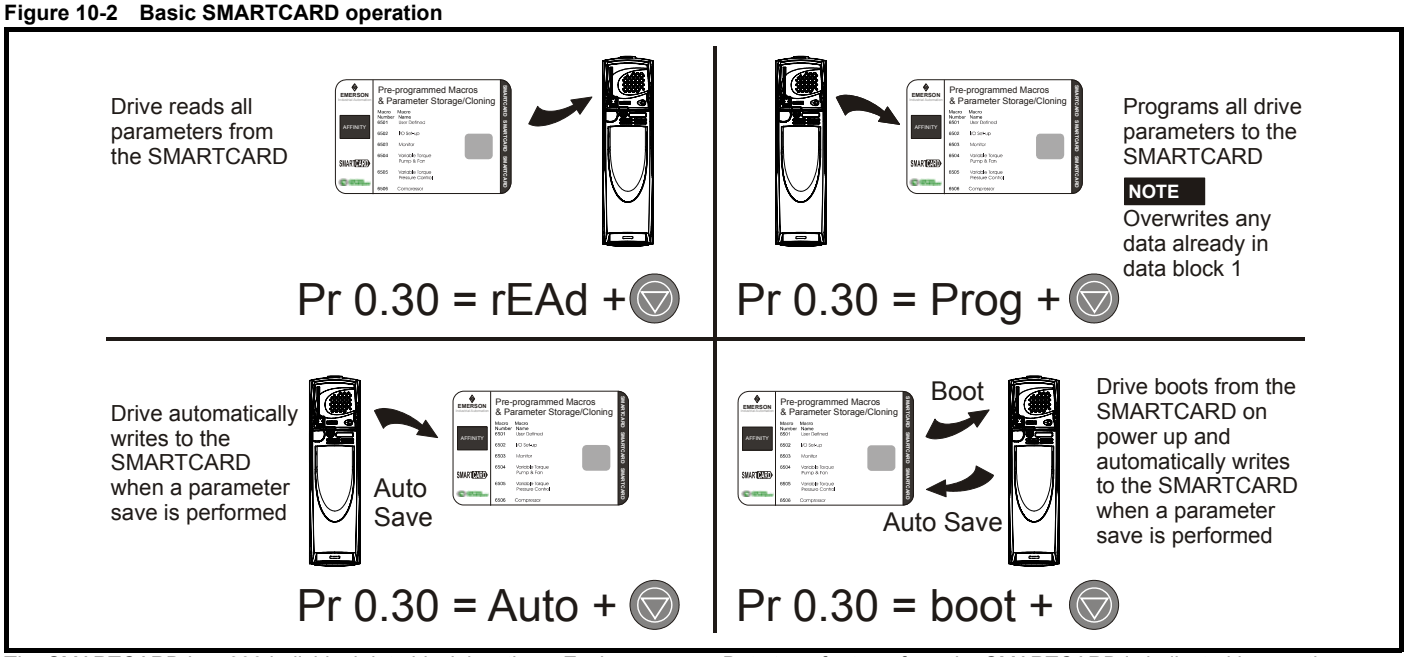

The SMARTCARD has 999 individual data block locations. Each individual location from 1 to 499 can be used to store data until the capacity of the SMARTCARD is used. The drive can support SMARTCARDs with a capacity of between 4kB and 512kB.

The data block locations of the SMARTCARD are arranged to have the following usage:

Table 10-1 SMARTCARD data blocks

Data Block	Type	Example Use
1 to 499	Read / Write	Application set ups
500 to 999	Read Only	Macros

'Differences from default' parameter sets will be much smaller than whole parameter sets and thus take up a lot less memory as most applications only require a few parameters to be changed from the default setting.

The whole card may be protected from writing or erasing by setting the read-only flag as detailed section 10.2.9 *9888 / 9777 - Setting and clearing the SMARTCARD read only flag* on page 127.

Data transfer to or from the SMARTCARD is indicated by one the following:

- Keypad: The symbol 'CC' will appear in the lower left hand corner of the display

The card should not be removed during data transfer, as the drive will produce a trip. If this occurs then either the transfer should be reattempted or in the case of a card to drive transfer, default parameters should be loaded.

10.2 Transferring data

Data transfer, erasing and protecting the information is performed by entering a code in Pr **xx.00** and then resetting the drive as shown in Table 10-2.

Table 10-2 SMARTCARD codes

Code	Action
2001	Transfer drive parameters as difference from defaults to a bootable SMARTCARD block in data block number 001
3yyy	Transfer drive parameters to a SMARTCARD block number yyy
4yyy	Transfer drive data as difference from defaults to SMARTCARD block number yyy
5yyy	Transfer drive Onboard PLC program to SMARTCARD block number yyy
6yyy	Transfer SMARTCARD data block yyy to the drive
7yyy	Erase SMARTCARD data block yyy
8yyy	Compare drive parameters with block yyy
9555	Clear SMARTCARD warning suppression flag (V01.07.00 and later)
9666	Set SMARTCARD warning suppression flag (V01.07.00 and later)
9777	Clear SMARTCARD read-only flag
9888	Set SMARTCARD read-only flag
9999	Erase SMARTCARD

Where yyy indicates the block number 001 to 999. See Table 10-1 for restrictions on block numbers.

NOTE

If the read only flag is set then only codes 6yyy or 9777 are effective.

10.2.1 Writing to the SMARTCARD

3yyy - Transfer data to the SMARTCARD

The data block contains the complete parameter data from the drive, i.e. all user save (US) parameters except parameters with the NC coding bit set. Power-down save (PS) parameters are not transferred to the SMARTCARD.

4yyy - Write default differences to a SMARTCARD

The data block only contains the parameter differences from the last time default settings were loaded.

Six bytes are required for each parameter difference. The data density is not as high as when using the 3yyy transfer method as described in the previous section, but in most cases the number of differences from default is small and the data blocks are therefore smaller. This method can be used for creating drive macros. Power-down save (PS) parameters are not transferred to the SMARTCARD.

The data block format is different depending on the software version. The data block holds the following parameters:

All user save (US) parameters including those that do not have a default value, but not including those with the NC (Not Cloned) coding bit set can be transferred to the SMARTCARD. In addition to these parameters all menu 20 parameters (except Pr **20.00**), can be transferred to the SMARTCARD even though they are not user save parameters and have the NC coding bit set.

It is possible to transfer parameters between drives with each of the different formats, however, the data block compare function does not work with data produced by different formats.

Writing a parameter set to the SMARTCARD (Pr 11.42 = Prog (2))

Setting Pr **11.42** to Prog (2) and resetting the drive will save the parameters to the SMARTCARD, i.e. this is equivalent to writing 3001 to Pr **xx.00**. All SMARTCARD trips apply except 'C.Chg'. If the data block already exists it is automatically overwritten. When the action is complete this parameter is automatically reset to nonE (0).

10.2.2 Reading from the SMARTCARD

6yyy - Read default differences from a SMARTCARD

When the data is transferred back to a drive, using 6yyy in Pr **xx.00**, it is transferred to the drive RAM and the drive EEPROM. A parameter save is not required to retain the data after power-down. Set up data for any Solutions Modules installed are stored on the card and are transferred to the destination drive. If the Solutions Modules are different between the source and destination drive, the menus for the slots where the Solutions Module categories are different are not updated from the card and will contain their default values after the cloning action. The drive will produce a 'C.Optn' trip if the Solutions Modules installed to the source and destination drive are different or are in different slots. If the data is being transferred to a drive of a different voltage or current rating a 'C.rtg' trip will occur.

The following drive rating dependant parameters (RA coding bit set) will not be transferred to the destination drive by a SMARTCARD when the rating of the destination drive is different from the source drive and the file is a parameter file (i.e. created using the 3yyy transfer method). However, drive rating dependent parameters will be transferred if only the current rating is different and the file is a differences from default type file (i.e. created using the 4yyy transfer method). If drive rating dependant parameters are not transferred to the destination drive they will contain their default values.

Pr **2.08** *Standard ramp voltage*
Pr **4.05** to Pr **4.07** and Pr **21.27** to Pr **21.29** *Current limits*
Pr **4.24**, *User current maximum scaling*
Pr **5.07**, Pr **21.07** *Motor rated current*
Pr **5.09**, Pr **21.09** *Motor rated voltage*
Pr **5.10**, Pr **21.10** *Rated power factor*
Pr **5.17**, Pr **21.12** *Stator resistance*
Pr **5.18** *Switching frequency*
Pr **5.23**, Pr **21.13** *Voltage offset*
Pr **5.24**, Pr **21.14** *Transient inductance*
Pr **5.25**, Pr **21.24** *Stator inductance*
Pr **6.06** *DC injection braking current*
Pr **6.48** *Line power supply loss ride through detection level*

Reading a parameter set from the SMARTCARD (Pr 11.42 = rEAd (1))

Setting Pr **11.42** to rEAd (1) and resetting the drive will transfer the parameters from the card into the drive parameter set and the drive EEPROM, i.e. this is equivalent to writing 6001 to Pr **xx.00**. All SMARTCARD trips apply. Once the parameters are successfully copied this parameter is automatically reset to nonE (0). Parameters are saved to the drive EEPROM after this action is complete.

NOTE

This operation is only performed if data block 1 on the card is a full parameter set (3yyy transfer) and not a default difference file (4yyy transfer). If block 1 does not exist a 'C.dAt' trip occurs.

10.2.3 Auto saving parameter changes (Pr 11.42 = Auto (3))

This setting causes the drive to automatically save any changes made to menu 0 parameters on the drive to the SMARTCARD. The latest menu 0 parameter set in the drive is therefore always backed up on the SMARTCARD. Changing Pr **11.42** to Auto (3) and resetting the drive will immediately save the complete parameter set from the drive to the card, i.e. all user save (US) parameters except parameters with the NC coding bit set. Once the whole parameter set is stored only the individual modified menu 0 parameter setting is updated.

Advanced parameter changes are only saved to the card when Pr **xx.00** is set to a 1000 and the drive reset.

All SMARTCARD trips apply, except ‘C.Chg’. If the data block already contains information it is automatically overwritten.

If the card is removed when Pr **11.42** is set to 3 Pr **11.42** is then automatically set to nonE (0).

When a new SMARTCARD is installed Pr **11.42** must be set back to Auto (3) by the user and the drive reset so the complete parameter set is rewritten to the new SMARTCARD if auto mode is still required.

When Pr **11.42** is set to Auto (3) and the parameters in the drive are saved, the SMARTCARD is also updated, therefore the SMARTCARD becomes a copy of the drives stored configuration.

At power up, if Pr **11.42** is set to Auto (3), the drive will save the complete parameter set to the SMARTCARD. The drive will display ‘cArd’ during this operation. This is done to ensure that if a user puts a new SMARTCARD in during power down the new SMARTCARD will have the correct data.

NOTE

When Pr **11.42** is set to Auto (3) the setting of Pr **11.42** itself is saved to the drive EEPROM but NOT to the SMARTCARD.

10.2.4 Booting up from the SMARTCARD on every power up (Pr 11.42 = boot (4))

When Pr **11.42** is set to boot (4) the drive operates the same as Auto mode except when the drive is powered-up. The parameters on the SMARTCARD will be automatically transferred to the drive at power up if the following are true:

- A card is inserted in the drive
- Parameter data block 1 exists on the card
- The data in block 1 is type 1 to 5 (as defined in Pr **11.38**)
- Pr **11.42** on the card set to boot (4)

The drive will display 'boot' during this operation. If the drive mode is different from that on the card, the drive gives a 'C.Typ'. trip and the data is not transferred.

If 'boot' mode is stored on the cloning SMARTCARD this makes the cloning SMARTCARD the master device. This provides a very fast and efficient way of re-programming a number of drives.

If data block 1 contains a bootable parameter set and data block 2 contains an Onboard PLC program (type 17 as defined in Pr **11.38**), then the onboard PLC program will be transferred to the drive at power up along with the parameter set in data block 1.

NOTE

‘Boot’ mode is saved to the card, but when the card is read, the value of Pr **11.42** is not transferred to the drive.

10.2.5 Booting up from the SMARTCARD on every power up (Pr xx.00 = 2001)

It is possible to create a difference from default bootable file by setting Pr **xx.00** to 2001 and resetting the drive. This type of file causes the drive to behave in the same way at power-up as a file created with boot mode set up with Pr **11.42**. The difference from the default file is that it has the added advantage of including menu 20 parameters.

Setting Pr **xx.00** to 2001 will overwrite data block 1 on the card if it already exists.

If a data block 2 exists and contains an Onboard PLC program (type 17 as defined in Pr **11.38**), this will also be loaded after the parameters have been transferred

A bootable difference from default file can only be created in one operation and parameters cannot be added as they are saved via menu 0.

10.2.6 8yyy - Comparing the drive full parameter set with the SMARTCARD values

Setting 8yyy in Pr **xx.00**, will compare the SMARTCARD file with the data in the drive. If the compare is successful Pr **xx.00** is simply set to 0. If the compare fails a ‘C.cpr’ trip is initiated.

10.2.7 7yyy / 9999 - Erasing data from the SMARTCARD

Data can be erased from the SMARTCARD either one block at a time or all blocks in one go.

- Setting 7yyy in Pr **xx.00** will erase SMARTCARD data block yyy.
- Setting 9999 in Pr **xx.00** will erase all SMARTCARD data blocks

10.2.8 9666 / 9555 - Setting and clearing the SMARTCARD warning suppression flag

If the Solutions Modules installed to the source and destination drive are different or are in different slots the drive will produce a 'C.Optn' trip. If the data is being transferred to a drive of a different voltage or current rating a 'C.rtg' trip will occur. It is possible to suppress these trips by setting the warning suppression flag. If this flag is set the drive will not trip if the Solutions Module(s) or drive ratings are different between the source and destination drives. The Solutions Module or rating dependent parameters will not be transferred.

- Setting 9666 in Pr **xx.00** will set the warning suppression flag
- Setting 9555 in Pr **xx.00** will clear the warning suppression flag

10.2.9 9888 / 9777 - Setting and clearing the SMARTCARD read only flag

The SMART CARD may be protected from writing or erasing by setting the read only flag. If an attempt is made to write or erase a data block when the read only flag is set, a 'C.rdo' trip is initiated. When the read only flag is set only codes 6yyy or 9777 are effective.

- Setting 9888 in Pr **xx.00** will set the read only flag
- Setting 9777 in Pr **xx.00** will clear the read only flag.

10.3 Data block header information

Each data block stored on a SMARTCARD has header information detailing the following:

- A number which identifies the block (Pr **11.37**)
- The type of data stored in the block (Pr **11.38**)
- The drive mode if the data is parameter data (Pr **11.38**)
- The version number (Pr **11.39**)
- The checksum (Pr **11.40**)
- The read-only flag
- The warning suppression flag

The header information for each data block which has been used can be viewed in Pr **11.38** to Pr **11.40** by increasing or decreasing the data block number set in Pr **11.37**.

If Pr **11.37** is set to 1000 the checksum parameter (Pr **11.40**) shows the number of 16 byte pages left on the card.

If Pr **11.37** is set to 1001 the checksum parameter (Pr **11.40**) shows the total capacity of the card in 16 byte pages. Therefore, for a 4kB card this parameter would show 254.

If Pr **11.37** is set to 1002 the checksum parameter (Pr **11.40**) shows the state of the read-only (bit 0) and warning suppression flags (bit 1).

If Pr **11.37** is set to 1003, the checksum parameter (Pr **11.40**) shows the product identifier (255 = Unidrive SP, 1 = Commander GP20, 3 = Affinity)

If there is no data on the card Pr **11.37** can only have values of 0 or 1000 to 1003.

10.4 SMARTCARD parameters

Table 10-3 Key to parameter table coding

RW	Read / Write	RO	Read only	Uni	Unipolar
Bi	Bi-polar	Bit	Bit parameter	Txt	Text string
FI	Filtered	DE	Destination	NC	Not cloned
RA	Rating dependent	PT	Protected	US	User save
PS	Power down save				

11.36 {0.29}	**SMARTCARD parameter data previously loaded**									
RO	Uni					NC	PT	US		
⇳	0 to 999				⇨	0				

This parameter shows the number of the data block last transferred from a SMARTCARD to the drive.

11.37	**SMARTCARD data number**									
RW	Uni					NC				
⇳	0 to 1003				⇨	0				

This parameter should have the data block number entered for which the user would like information displayed in Pr **11.38**, Pr **11.39** and Pr **11.40**.

11.38	SMARTCARD data type/mode								
RO	Txt					NC	PT		
⇳	0 to 18			⇨					

Gives the type/mode of the data block selected with Pr **11.37**:

Pr 11.38	String	Type/mode	Data stored
0	FrEE	Value when Pr **11.37** = 0, 1000 to 1003	
1		Reserved	
2	3OpEn.LP	Open-loop mode parameters	Data from EEPROM
3	3 rfc	RFC mode parameters	
4		Reserved	
5		Reserved	
6 to 8	3Un	Unused	
9		Reserved	
10	4OpEn.LP	Open-loop mode parameters	Defaults last loaded and differences
11	4 rfc	RFC mode parameters	
12		Reserved	
13		Reserved	
14 to 16	4Un	Unused	
17	LAddEr	Onboard PLC program	
18	Option	A Solutions Module file	

11.39	SMARTCARD data version								
RW	Uni					NC			
⇳	0 to 9,999			⇨	0				

Gives the version number of the data block selected in Pr **11.37**.

11.40	SMARTCARD data checksum								
R0	Uni					NC	PT		
⇳	0 to 65,335			⇨					

Gives the checksum of the data block selected in Pr **11.37**.

11.42 {0.30}	Parameter cloning								
RW	Txt					NC		US*	
⇳	0 to 4			⇨	nonE (0)				

NOTE

If Pr **11.42** is equal to 1 or 2, this value is not transferred to the drive or saved to the EEPROM. If Pr **11.42** is set to a 3 or 4 the value is transferred.

nonE (0) = Inactive
rEAd (1) = Read parameter set from the SMARTCARD
Prog (2) = Programming a parameter set to the SMARTCARD
Auto (3) = Auto save
boot (4) = Boot mode

10.5 SMARTCARD trips

After an attempt to read, write or erase data to or from a SMARTCARD a trip may occur if there has been a problem with the command. The following trips indicate various problems as detailed in Table 10-4.

Table 10-4 Trip conditions

Trip	Diagnosis
C.Acc	**SMARTCARD trip: SMARTCARD Read / Write fail**
185	Check SMARTCARD is installed / located correctly Ensure SMARTCARD is not writing data to data location 500 to 999 Replace SMARTCARD
C.boot	**SMARTCARD trip: The menu 0 parameter modification cannot be saved to the SMARTCARD because the necessary file has not been created on the SMARTCARD**
177	A write to a menu 0 parameter has been initiated via the keypad with Pr **11.42** set to auto(3) or boot(4), but the necessary file on the SMARTCARD has not been created Ensure that Pr **11.42** is correctly set and reset the drive to create the necessary file on the SMARTCARD Re-attempt the parameter write to the menu 0 parameter
C.bUSY	**SMARTCARD trip: SMARTCARD can not perform the required function as it is being accessed by a Solutions Module**
178	Wait for the Solutions Module to finish accessing the SMARTCARD and then re-attempt the required function
C.Chg	**SMARTCARD trip: Data location already contains data**
179	Erase data in data location Write data to an alternative data location
C.Cpr	**SMARTCARD trip: The values stored in the drive and the values in the data block on the SMARTCARD are different**
188	Press the red reset button
C.dat	**SMARTCARD trip: Data location specified does not contain any data**
183	Ensure data block number is correct
C.Err	**SMARTCARD trip: SMARTCARD data is corrupted**
182	Ensure the card is located correctly Erase data and retry Replace SMARTCARD
C.Full	**SMARTCARD trip: SMARTCARD full**
184	Delete a data block or use a different SMARTCARD
C.Optn	**SMARTCARD trip: Solutions Modules installed are different between source drive and destination drive**
180	Ensure correct Solutions Modules are installed Ensure Solutions Modules are in the same Solutions Module slot Press the red reset button
C.Prod	**SMARTCARD trip: The data blocks on the SMARTCARD are not compatible with this product**
175	Erase all data on the SMARTCARD by setting Pr **xx.00** to 9999 and pressing the red reset button Replace SMARTCARD
C.rdo	**SMARTCARD trip: SMARTCARD has the Read only bit set**
181	Enter 9777 in Pr **xx.00** to allow SMARTCARD Read / Write access Ensure card is not writing to data locations 500 to 999

Table 10-4 Trip conditions

<table>
<tr><th>Trip</th><th>Diagnosis</th></tr>
<tr><td>C.rtg</td><td>SMARTCARD trip: The voltage and/or current rating of the source and destination drives are different</td></tr>
<tr><td>186</td><td>Drive rating dependent parameters (parameters with the RA coding) are likely to have different values and ranges with drives of different voltage and current ratings. Parameters with this attribute will not be transferred to the destination drive by SMARTCARDs when the rating of the destination drive is different from the source drive and the file is a parameter file. However, drive rating dependent parameters will be transferred if only the current rating is different and the file is a differences from default type file.
Press the red reset button
Drive rating parameters are:
<table>
<tr><th>Parameter</th><th>Function</th></tr>
<tr><td>2.08</td><td>Standard ramp voltage</td></tr>
<tr><td>4.05/6/7, 21.27/8/9</td><td>Current limits</td></tr>
<tr><td>4.24</td><td>User current maximum scaling</td></tr>
<tr><td>5.07, 21.07</td><td>Motor rated current</td></tr>
<tr><td>5.09, 21.09</td><td>Motor rated voltage</td></tr>
<tr><td>5.10, 21.10</td><td>Rated power factor</td></tr>
<tr><td>5.17, 21.12</td><td>Stator resistance</td></tr>
<tr><td>5.18</td><td>Switching frequency</td></tr>
<tr><td>5.23, 21.13</td><td>Voltage offset</td></tr>
<tr><td>5.24, 21.14</td><td>Transient inductance</td></tr>
<tr><td>5.25, 21.24</td><td>Stator inductance</td></tr>
<tr><td>6.06</td><td>DC injection braking current</td></tr>
<tr><td>6.48</td><td>Line power supply loss ride through detection level</td></tr>
</table>
The above parameters will be set to their default values.</td></tr>
<tr><td>C.Typ</td><td>SMARTCARD trip: SMARTCARD parameter set not compatible with drive</td></tr>
<tr><td>187</td><td>Press the red reset button
Ensure destination drive type is the same as the source parameter file drive type</td></tr>
</table>

Table 10-5 SMARTCARD status indications

Lower display	Description	Lower display	Description
boot	A parameter set is being transferred from the SMARTCARD to the drive during power-up. For further information, please refer to section 10.2.4 *Booting up from the SMARTCARD on every power up (Pr 11.42 = boot (4))* .	**cArd**	The drive is writing a parameter set to the SMARTCARD during power-up. For further information, please refer to section 10.2.3 *Auto saving parameter changes (Pr 11.42 = Auto (3))* .

11 PC tools

11.1 AffinitySoft

AffinitySoft is a Windows™ based software commissioning/start-up tool for Affinity and other Control Techniques products.

AffinitySoft can be used for commissioning/start-up and monitoring, drive parameters can be uploaded, downloaded and compared, and simple or custom menu listings can be created. Drive menus can be displayed in standard list format or as live block diagrams. AffinitySoft is able to communicate with a single drive or a network.

AffinitySoft can be found on the CD which is supplied with the drive and is also available for download from www.controltechniques.com (file size approximately 25MB).

AffinitySoft system requirements:

- Windows NT4/2000/XP. **Windows 95/98/98SE/ME and Windows 2003 server are NOT supported**
- Internet Explorer V5.0 or later must be installed
- Minimum of 800x600 screen resolution with 256 colours. 1024x768 is recommended.
- 128MB RAM
- Pentium III 500MHz or better recommended.
- Adobe Acrobat Reader 5.1 or later (for parameter help). See CD provided
- Microsoft.Net Framework 2.0
- Note that you must have administrator rights under Windows NT/ 2000/XP to install.

Included with AffinitySoft are the user guides for the supported drive models. When help on a particular parameter is request by the user, AffinitySoft links to the parameter in the relevant advanced user guide.

11.1.1 Installing AffinitySoft

To install AffinitySoft from the CD, insert the CD and the auto-run facility should start up the front-end screen from which AffinitySoft can be selected. Otherwise run the SETUP.EXE in the AffinitySoft folder. Any previous copy of AffinitySoft should be uninstalled before proceeding with the installation (existing projects will not be lost).

11.1.2 Uninstalling AffinitySoft

To uninstall AffinitySoft, go to the Control Panel, select "Add and Remove Programs". Scroll down the list until "AffinitySoft" is found then click on "Change/Remove". Uninstalling will not lose any user project or data files.

11.1.3 Communications Overview

AffinitySoft operates in 2 basic communication modes:

In ONLINE mode AffinitySoft polls the selected drive to update all displayed parameter values. Any changes made to a parameter value will be displayed within AffinitySoft.

In OFFLINE mode AffinitySoft does not require any connection to a drive. Each parameter can be displayed and edited, and these alterations will only affect AffinitySoft's internal parameter set.

11.1.4 Getting started with AffinitySoft

Please refer to the Readme file available within the installation directory for the latest information.

During the startup of AffinitySoft a number of initialisation files are accessed. These files enable AffinitySoft to store and retrieve system, user specific and parameter data.

On initialisation, the startup dialog is displayed allowing you to create a new project, open a previously saved project, or to work with a drive which automatically creates a project and allows quick access to communicating with a single drive.

Before drive commissioning/start-up can proceed, it is necessary to set up the Communications port to enable communication between the host PC and drive. Select the "Drive" menu, and Properties, to open the Drive Properties dialog.

Included in AffinitySoft are the Advanced User Guides for the supported drive models. When help on a particular parameter is requested by the user, AffinitySoft links to the parameter in the relevant advanced user guide. Double-click the mouse on the required parameter and select parameter help from the displayed box

The following is a brief introduction to the functions available. Reference should be made to the AffinitySoft and drive Help files for more detailed information.

- The drive set-up wizard guides the novice user in entering motor and application data. Help is provided for each step in the set-up wizard and, after the data is downloaded to the drive, a quick motor test can be performed.
- AffinitySoft will automatically update the screen with any read values.
- The Navigation Panel allows the user to move between the screens in AffinitySoft.
- The Terminal Configuration screens display graphically the choice of terminal set-up. They enable the quick and effective setting of parameters to achieve the terminal configuration desired, with no knowledge of the parameters being set-up. The Analog References screen also provides the ability to set-up the mode of operation of the analog inputs. The graphical wiring diagram required for basic control dynamically altering with respect to the user choice.
- The monitoring screens show the status motor parameters displayed on panel meters. Drive faults are displayed and the faults log shows the last ten trips with description and time.
- The parameter listings are used to display the entire contents of a menu. This allows access to parameters that are not available to the user within the graphical screens or block diagrams. Complete parameter upload and download functions are provided with the ability to save these to disk. Complete compare facilities enable the comparison of AffinitySoft's memory with a user saved parameter file or database defaults, highlighting any differences.
- The Custom list enables parameters to be added to a custom list made up of all available drive parameters. This enables the viewing of unrelated parameters on the same screen. Custom files may be saved by the user for use at a later date.
- Many of the menus have associated block diagrams that graphically indicate how all of the related parameters interact. To change a parameter value simply right-click on a parameter and select "Edit Parameter".

11.2 Onboard PLC and SYPTLite

The drive has the ability to store and execute a 4KB Onboard PLC ladder logic program without the need for additional hardware.

The ladder logic program is written using SYPTLite, a Windows™ based ladder diagram editor allowing the development of programs for execution in Affinity.

SYPTLite is designed to be easy to use and to make program development as simple as possible. The features provided are a sub-set of those in the SYPT program editor. SYPTLite programs are developed using ladder logic, a graphical language widely used to program PLCs (IEC61131-3). SYPTLite allows the user to "draw" a ladder diagram representing a program.

SYPTLite provides a complete environment for the development of ladder diagrams. Ladder diagrams can be created, compiled into user programs and downloaded to a Affinity for execution, via the RJ45 serial communications port on the front of the drive. The run-time operation of the compiled ladder diagram on the target can also be monitored using SYPTLite and facilities are provided to interact with the program on the target by setting new values for target parameters.

SYPTLite is available on the CD which is supplied with the drive.

11.2.1 Benefits

The combination of the Onboard PLC and SYPTLite, means that the drive can replace nano and some micro PLCs in many applications. The Onboard PLC programs can consist of up to a maximum of 50 ladder logic rungs (up to 7 function blocks and 10 contacts per rung). The Onboard PLC program can also be transferred to and from a SMARTCARD for backup or quick commissioning/start-up

In addition to the basic ladder symbols, SYPTLite contains a sub-set of the function from the full version of SYPT. These include,

- Arithmetic blocks
- Comparison blocks
- Timers
- Counters
- Multiplexers
- Latches
- Bit manipulation

Typical applications for the Onboard PLC include,

- Ancillary pumps
- Fans and control valves
- Interlocking logic
- Sequences routines
- Custom control words.

11.2.2 Limitations

The Onboard PLC program has the following limitations:

- The maximum program size is 4032 bytes including header and optional source code.
- The drive is rated for 100 program downloads. This limitation is imposed by the flash memory used to store the program within the drive.
- The user cannot create user variables. The user is only able to manipulate the drive parameter set.
- There are no real-time tasks, i.e. the scheduling rate of the program cannot be guaranteed. Applications Modules tasks such as Clock, Event, Pos0 or Speed are not available. The Onboard PLC should not be used for time-critical applications. For time-critical applications Unidrive SP and an SM-Applications Plus, SM-Applications or SM-Applications Lite should be used.
- The program runs at a low priority. The drive provides a single background task in which to run a ladder diagram. The drive is prioritised to perform its major functions first, e.g. motor control, and will use any remaining processing time to execute the ladder diagram as a background activity. As the drive's processor becomes more heavily loaded, less time is spent executing the program.

Figure 11-1 Onboard PLC program scheduling

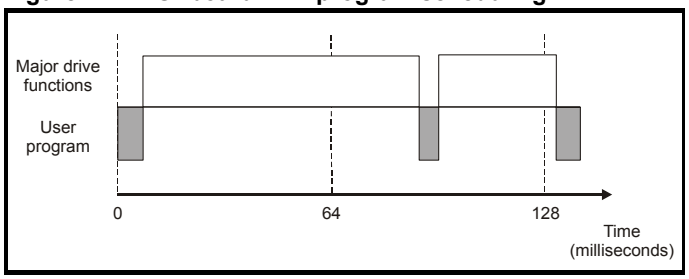

The user program is scheduled for a short period approximately once every 64ms. The time for which the program is scheduled will vary between 0.2ms and 2ms depending on the loading of the drive's processor.

When scheduled, several scans of the user program may be performed. Some scans may execute in microseconds. However, when the main drive functions are scheduled there will be a pause in the execution of the program causing some scans to take many milliseconds. SYPTLite displays the average execution time calculated over the last 10 scans of the user program.

11.2.3 Getting started

SYPTLite can be found on the CD which is supplied with the drive.

SYPTLite system requirements

- Windows 2000/XP. **Windows 95/98/98SE/Me/NT4 are not supported**
- Pentium III 500MHz or better recommended
- 128MB RAM
- Minimum of 800x600 screen resolution. 1024x768 is recommended
- Adobe Acrobat 5.10 or later (for viewing User Guides)
- Microsoft Internet Explorer V5.0 or later
- RS232 to RS485, RJ45 communications lead to connect the PC to the drive
- Administrator rights under Windows 2000/XP are required to install the software

To install SYPTLite, insert the CD and the auto-run facility should start up the front-end screen, from which SYPTLite can be selected.

See the SYPTLite help file for more information regarding using SYPTLite, creating ladder diagrams and the available function blocks.

11.2.4 Onboard PLC parameters

The following parameters are associated with the Onboard PLC program.

11.47	Drive Onboard PLC program enable									
RW	Uni								US	
⇳	0 to 2						š	2		

This parameter is used to start and stop the drive Onboard PLC program.

Value	Description
0	Halt the drive Onboard PLC program.
1	Run the drive Onboard PLC program (if installed). Any out-of-range parameter writes attempted will be clipped to the maximum / minimum values valid for that parameter before being written.
2	Run the drive Onboard PLC program (if installed). Any out-of-range parameter writes attempted will cause a 'UP ovr' trip.

11.48	Drive Onboard PLC program status									
RO	Bi						NC	PT		
⇳	-128 to +127						š			

The drive Onboard PLC program status parameter indicates to the user the actual state of the drive Onboard PLC program.

Value	Description
-n	Onboard PLC program caused a drive trip due to an error condition while running rung n. Note that the rung number is shown on the display as a negative number.
0	Onboard PLC program is not installed.
1	Onboard PLC program is installed but stopped.
2	Onboard PLC program is installed and running.

When an Onboard PLC program is installed and running, the lower display of the drive flashes 'PLC' once every 10s.

11.49	Drive Onboard PLC programming events									
RO	Uni						NC	PT		PS
⇳	0 to 65,535						š			

The drive Onboard PLC programming events parameter holds the number of times an Onboard PLC program download has taken place and is 0 on dispatch from the factory. The drive is rated for one hundred ladder program downloads. This parameter is not altered when defaults are loaded.

11.50	Drive Onboard PLC program average scan time									
RO	Uni						NC	PT		
⇳	0 to 65,535 ms						š			

This parameter is updated once per second or once per Onboard PLC program scan whichever is the longest. If more than one program scan occurs within the one second update period the parameter shows the average scan time. If the program scan time is longer than one second the parameter shows the time for the last program scan.

11.51	Drive Onboard PLC program first run								
RO	Bit					NC	PT		
⇳	OFF (0) or On (1)				š				

The Drive Onboard PLC program first run parameter is set for the duration of program scan from the stopped state. This enables the user to perform any required initialisation every time the program is run. This parameter is set every time the program is stopped.

11.2.5 Onboard PLC trips

The following trips are associated with the Onboard PLC program.

Trip	Diagnosis
UP ACC	**Onboard PLC program: Cannot access Onboard PLC program file on drive**
98	Disable drive - write access is not allowed when the drive is enabled. Another source is already accessing Onboard PLC program - retry once the other action is complete.
UP div0	**Onboard PLC program attempted divide by zero**
90	Check program
UP OFL	**Onboard PLC program variables and function block calls using more than the allowed RAM space (stack overflow)**
95	Check program
UP ovr	**Onboard PLC program attempted out of range parameter write**
94	Check program
UP PAr	**Onboard PLC program attempted access to a non-existent parameter**
91	Check program
UP ro	**Onboard PLC program attempted write to a read-only parameter**
92	Check program
UP So	**Onboard PLC program attempted read of a write-only parameter**
93	Check program
UP udF	**Onboard PLC program undefined trip**
97	Check program
UP uSEr	**Onboard PLC program requested a trip**
96	Check program

11.2.6 Onboard PLC and the SMARTCARD

The Onboard PLC program in a drive may be transferred from the drive to a SMARTCARD and vice versa.

- To transfer an Onboard PLC program from the drive to a SMARTCARD, set Pr **xx.00** to 5yyy and reset the drive
- To transfer an Onboard PLC program from the SMARTCARD to a drive, set Pr **xx.00** to 6yyy and reset the drive.

(Where yyy is the data block location, see Table 10-1 *SMARTCARD data blocks* on page 125 for restrictions on block numbers).

If an attempt is made to transfer an Onboard PLC program from a drive to the SMARTCARD when the drive contains no program, the block is still created on the SMARTCARD but it will contain no data. If this data block is then transferred to a drive, the destination drive will then have no Onboard PLC program.

The smallest SMARTCARD compatible with Affinity has a capacity of 4064 bytes and each block can be up to 4064 bytes in size. The maximum size of a user program is 4032 bytes so it is guaranteed that any Onboard PLC program downloaded to a Affinity will fit on to an empty SMARTCARD. A SMARTCARD can contain a number of Onboard PLC programs until the capacity of the card is used.

11.3 CT Energy Savings Estimator

CT Energy Savings Estimator is a Windows™ based tool for estimating electrical energy consumption and savings for fan and pump applications. It provides a comparison of energy usage for various control methods such as Variable Frequency Drive, outlet dampers, inlet vanes and valves.

The results, displayed in graphical and text format, are provided for energy usage, savings and payback. This data can be incorporated in customer reports which can be viewed, printed, e-mailed as a PDF file or exported to a file in PDF, RTF, HTML, GIF, BMP, JPG, TIF format.

CT Energy Savings Estimator can be found on the CD supplied with the drive.

System Requirements

- Personal Computer or Notebook (Pentium or faster) running Windows 2000, XP, 2003 Server
- Memory: 256 MB RAM for Windows 2000/XP
- Monitor: VGA or higher with a minimum resolution of 800x600 (256 colours)
- Hard Disk: 15MB Available Disk Space
- Windows-compatible ink jet or laser printer for printing of reports (optional)
- Application Programming Interface (MAPI) to e-mail report (optional)

11.3.1 Installation

To install CT Energy Savings Estimator, insert the CD and run setup.exe

11.3.2 Functions

The following is a summary of the functions available. Further information is available in the help facility provided.

Program set up: allows changes to the following parameters

- Preferences: set up customer report information (name, address, contact, logo) enable use of pre-printed letterhead, enable welcome start-up message,
- Efficiency set up: efficiency data for VFD, damper, inlet vane and valves
- Custom efficiency: efficiency data for custom applications
- Report Layout: company address and logo

Data entry: allows entry of the following data

- Customer information - customer name, address, telephone e-mail.
- System data:
  - Operation timescales
  - Motor power/efficiency
  - Unit energy cost
  - Company incentive cost
  - Inverter costs
  - Duty cycle percentages

Results: data representation

- Energy Estimation - Display energy cost, savings and pay back data
- Energy Graphs - Graphical representation of flow vs Cost, hours and time
- Report - Review/print/export report, e-mail report as PDF file

Formulas: provides the following tools

- Horse power calculations for fan/blowers, pumps, rotating objects and objects in linear motion
- Torque calculations
- AC motor calculations for Synchronous speed and percentage slip
- Ohms law calculations
- Power AC calculations for current, efficiency, power factor, horse power, kW and Volt-Amperes

12 Advanced parameters

This is a quick reference to all parameters in the drive showing units, ranges limits etc, with block diagrams to illustrate their function. Full descriptions of the parameters can be found in the *Advanced User Guide* on the supplied CD ROM.



These advanced parameters are listed for reference purposes only. The lists in this chapter do not include sufficient information for adjusting these parameters. Incorrect adjustment can affect the safety of the system, and damage the drive and or external equipment. Before attempting to adjust any of these parameters, refer to the *Advanced User Guide*.

Table 12-1 Menu descriptions

Menu number	Description
0	Commonly used basic set up parameters for quick / easy programming
1	Frequency / speed reference
2	Ramps
3	Frequency slaving, speed feedback and speed control
4	Torque and current control
5	Motor control
6	Sequencer and clock
7	Analog I/O
8	Digital I/O
9	Programmable logic, motorized pot and binary sum
10	Status and trips
11	General drive set-up
12	Threshold detectors and variable selectors
14	User PID controller
15, 16	Solutions Module slots
17	Building automation network
18	Application menu 1
19	Application menu 2
20	Application menu 3
21	Second motor parameters
22	Additional Menu 0 set-up

Operation mode abbreviations:

OL> Open loop
RFC> RFC

Default abbreviations:

EUR> European default value (50Hz AC supply frequency)
USA> USA default value (60Hz AC supply frequency)

NOTE

Parameter numbers shown in brackets {...} are the equivalent Menu 0 parameters. Some Menu 0 parameters appear twice since their function depends on the operating mode.

In some cases, the function or range of a parameter is affected by the setting of another parameter; the information in the lists relates to the default condition of such parameters.

Table 12-2 Key to parameter table coding

Coding	Attribute
RW	Read/write: can be written by the user
RO	Read only: can only be read by the user
Bit	1 bit parameter. 'On' or 'OFF' on the display
Bi	Bipolar parameter
Uni	Unipolar parameter
Txt	Text: the parameter uses text strings instead of numbers.
FI	Filtered: some parameters which can have rapidly changing values are filtered when displayed on the drive keypad for easy viewing.
DE	Destination: This parameter selects the destination of an input or logic function.
RA	Rating dependent: this parameter is likely to have different values and ranges with drives of different voltage and current ratings. Parameters with this attribute will not be transferred to the destination drive by SMARTCARDs when the rating of the destination drive is different from the source drive and the file is a parameter file. However, the value will be transferred if only the current rating is different and the file is a differences from default type file.
NC	Not cloned: not transferred to or from SMARTCARDs during cloning.
PT	Protected: cannot be used as a destination.
US	User save: parameter saved in drive EEPROM when the user initiates a parameter save.
PS	Power-down save: parameter automatically saved in drive EEPROM when the under volts (UV) trip occurs or when the user initiates a parameter save.

Table 12-3 Feature look-up table

Feature	Parameter number (Pr)												
Acceleration rates	2.10	2.11 to 2.19		2.32	2.33	2.34	2.02						
Analog speed reference 1	1.36	7.10	7.01	7.07	7.08	7.09	7.25	7.26	7.30				
Analog speed reference 2	1.37	7.14	1.41	7.02	7.11	7.12	7.13	7.28	7.31				
Analog I/O	Menu 7												
Analog input 1	7.01	7.07	7.08	7.09	7.10	7.25	7.26	7.30					
Analog input 2	7.02	7.11	7.12	7.13	7.14	7.28	7.31						
Analog input 3	7.03	7.15	7.16	7.17	7.18	7.29	7.32						
Analog output 1	7.19	7.20	7.21	7.33									
Analog output 2	7.22	7.23	7.24										
Application menu	Menu 18		Menu 19		Menu 20								
At speed indicator bit	3.06	3.07	3.09	10.06	10.05	10.07							
Auto reset	10.34	10.35	10.36	10.01									
Autotune	5.12		5.17	5.23	5.24	5.25	5.10	5.29	5.30				
Binary sum	9.29	9.30	9.31	9.32	9.33	9.34							
Bipolar speed	1.10												
Brake control	12.40 to 12.48												
Braking	10.11	10.10	10.30	10.31	6.01	2.04	2.02	10.12	10.39	10.40			
Building automation network	Menu 17												
Catch a spinning motor	6.09												
Cloning	11.42	11.36 to 11.40											
Coast to stop	6.01												
Comms	11.23 to 11.26												
Cost - per kWh electricity	6.24	6.25	6.26	6.27	6.28								
Current controller	4.13	4.14											
Current feedback	4.01	4.02	4.17	4.04	4.12	4.20	4.23	4.24	4.26	10.08	10.09	10.17	
Current limits	4.05	4.06	4.07	4.18	4.15	4.19	4.16	5.07	5.10	10.08	10.09	10.17	
DC bus voltage	5.05	2.08											
DC injection braking	6.06	6.07	6.01										
Deceleration rates	2.20	2.21 to 2.29		2.04	2.35 to 2.37		2.02	2.04	2.08	6.01	10.30	10.31	10.39
Defaults	11.43	11.46											
Digital I/O	Menu 8												
Digital I/O read word	8.20												
Digital I/O T24	8.01	8.11	8.21	8.31									
Digital I/O T25	8.02	8.12	8.22	8.32									
Digital I/O T26	8.03	8.13	8.23	8.33									
Digital input T27	8.04	8.14	8.24										
Digital input T28	8.05	8.15	8.25	8.39									
Digital input T29	8.06	8.16	8.26	8.39									
Digital output T22	8.08	8.18	8.28										
Direction	10.13	6.30	6.31	1.03	10.14	2.01	3.02	8.03	8.04	10.40			
Display timeout	11.41												
Drive active	10.02	10.40											
Drive derivative	11.28												
Drive OK	10.01	8.27	8.07	8.17	10.36	10.40							
Dynamic performance	5.26												
Dynamic V/F	5.13												
Enable	6.15	8.09	8.10										
External trip	10.32	8.10	8.07										
Fan speed	6.45												
Fast disable	6.29												
Filter change	6.21	6.22											
Fire mode	1.53	1.54											
Frequency reference selection	1.14	1.15											
Hard speed reference	3.22	3.23											
Heavy duty rating	5.07	11.32											
High stability space vector modulation	5.19												
I/O sequencer	6.04	6.30	6.31	6.32	6.33	6.34	6.42	6.43	6.41				
Inertia compensation	2.38	5.12	4.22	3.18									
Jog reference	1.05	2.19	2.29										
Keypad operating mode	1.52												
Keypad reference	1.17	1.14	1.43	1.51	6.12	6.13							
Kt	5.32												

Feature	Parameter number (Pr)												
Limit switches	6.35	6.36											
Line power supply loss	6.03	10.15	10.16	5.05									
Logic function 1	9.01	9.04	9.05	9.06	9.07	9.08	9.09	9.10					
Logic function 2	9.02	9.14	9.15	9.16	9.17	9.18	9.19	9.20					
Low load detection	4.20	4.27	4.28	4.20	10.6								
Low voltage supply	6.44	6.46											
Maximum speed	1.06												
Menu 0 set up	11.01 to 11.22		Menu 22										
Minimum speed	1.07	10.04											
Modules - number of	11.35												
Motor map	5.06	5.07	5.08	5.09	5.10	5.11							
Motor map 2	Menu 21		11.45										
Motor pre-heat	6.08	6.52											
Motorized potentiometer	9.21	9.22	9.23	9.24	9.25	9.26	9.27	9.28					
Offset speed reference	1.04	1.38	1.09										
Onboard PLC	11.47 to 11.51												
Open collector digital outputs	8.30												
Open loop vector mode	5.14	5.17	5.23										
Operating mode	0.48	11.31											
Output	5.01	5.02	5.03	5.04									
Overspeed threshold	3.08												
PID controller	Menu 14												
Positive logic	8.29												
Power up parameter	11.22	11.21											
Precision reference	1.18	1.19	1.20	1.44									
Preset speeds	1.15	1.21 to 1.28		1.16	1.14	1.42	1.45 to 1.48		1.50				
Programmable logic	Menu 9												
Quasi square operation	5.20												
Ramp (accel / decel) mode	2.04	2.08	6.01	2.02	2.03	10.30	10.31	10.39					
Real time clock	6.16	6.17	6.18	6.19	6.20								
Regenerating	10.10	10.11	10.30	10.31	6.01	2.04	2.02	10.12	10.39	10.40			
Relay output	8.07	8.17	8.27										
Reset	10.33	8.02	8.22	10.34	10.35	10.36	10.01						
RFC mode	3.24	3.42	4.12	5.40									
S ramp	2.06	2.07											
Sample rates	5.18												
Security code	11.30	11.44											
Serial comms	11.23 to 11.26												
Skip speeds	1.29	1.30	1.31	1.32	1.33	1.34	1.35						
Sleep mode	6.53	6.54											
Slip compensation	5.27	5.08											
SMARTCARD	11.36 to 11.40		11.42										
Software version	11.29	11.34											
Speed controller	3.10 to 3.17		3.19	3.20	3.21								
Speed feedback	3.02	3.03	3.04										
Speed reference selection	1.14	1.15	1.49	1.50	1.01								
Status word	10.40												
Supply	6.44	5.05	6.46										
Switching frequency	5.18	5.35	7.34	7.35									
Thermal protection - drive	5.18	5.35	7.04	7.05	7.06	7.32	7.35	10.18					
Thermal protection - motor	4.15	5.07	4.19	4.16	4.25	7.15							
Thermistor input	7.15	7.03											
Threshold detector 1	12.01	12.03 to 12.07											
Threshold detector 2	12.02	12.23 to 12.27											
Time - filter change	6.21	6.22											
Time - powered up log	6.16	6.17	6.19	6.20									
Time - run log	6.16	6.17	6.19	6.20									
Timer functions	9.35 to 9.53												
Torque	4.03	4.26	5.32										
Torque mode	4.08	4.11	4.09	4.10									
Trip detection	10.37	10.38	10.20 to 10.29										
Trip log	10.20 to 10.29		10.41 to 10.60		6.28	6.49							
Under voltage	5.05	10.16	10.15										
V/F mode	5.15	5.14											
Variable selector 1	12.08 to 12.15												

Feature	Parameter number (Pr)												
Variable selector 2	12.28 to 12.35												
Voltage controller	5.31												
Voltage mode	5.14	5.17	5.23	5.15									
Voltage rating	11.33	5.09	5.05										
Voltage supply	6.44	6.46	5.05										
Warning	10.19	10.12	10.17	10.18	10.40								
Zero speed indicator bit	3.05	10.03											

Parameter ranges and variable maximums:

The two values provided define the minimum and maximum values for the given parameter. In some cases the parameter range is variable and dependant on either:

- other parameters
- the drive rating
- drive mode
- or a combination of these

The values given in Table 12-4 are the variable maximums used in the drive.

Table 12-4 Definition of parameter ranges & variable maximums

Maximum	Definition
SPEED_FREQ_MAX [Open-loop 3000.0Hz, RFC 40000.0rpm]	**Maximum speed (RFC mode) reference or frequency (open-loop mode) reference** If Pr **1.08** = 0: SPEED_FREQ_MAX = Pr **1.06** If Pr **1.08** = 1: SPEED_FREQ_MAX is Pr **1.06** or – Pr **1.07** whichever is the largest (If the second motor map is selected Pr **21.01** is used instead of Pr **1.06** and Pr **21.02** instead of Pr **1.07**)
SPEED_LIMIT_MAX [40000.0rpm]	**Maximum applied to speed reference limits** In RFC mode SPEED_LIMIT_MAX = 40,000rpm.
SPEED_MAX [40000.0rpm]	**Maximum speed** This maximum is used for some speed related parameters in menu 3. To allow headroom for overshoot etc. the maximum speed is twice the maximum speed reference. SPEED_MAX = 2 x SPEED_FREQ_MAX
RATED_CURRENT_MAX [9999.99A]	**Maximum motor rated current** RATED_CURRENT_MAX = 1.36 x K_C. The motor rated current can be increased above K_C up to a level not exceeding 1.36 x K_C). (Maximum motor rated current is the maximum normal duty current rating.) The actual level varies from one drive size to another, refer to Table 12-5.
DRIVE_CURRENT_MAX [9999.99A]	**Maximum drive current** The maximum drive current is the current at the over current trip level and is given by: DRIVE_CURRENT_MAX = K_C / 0.45
AC_VOLTAGE_SET_MAX [690V]	**Maximum output voltage set-point** Defines the maximum motor voltage that can be selected. 200V drives: 240V, 400V drives: 480V 575V drives: 575V, 690V drives: 690V
AC_VOLTAGE_MAX [930V]	**Maximum AC output voltage** This maximum has been chosen to allow for maximum AC voltage that can be produced by the drive including quasi-square wave operation as follows: AC_VOLTAGE_MAX = 0.78 x DC_VOLTAGE_MAX 200V drives: 325V, 400V drives: 650V, 575V drives: 780V, 690V drives: 930V
DC_VOLTAGE_SET_MAX [1150V]	**Maximum DC voltage set-point** 200V rating drive: 0 to 400V, 400V rating drive: 0 to 800V 575V rating drive: 0 to 955V, 690V rating drive: 0 to 1150V
DC_VOLTAGE_MAX [1190V]	**Maximum DC bus voltage** The maximum measurable DC bus voltage. 200V drives: 415V, 400V drives: 830V, 575V drives: 990V, 690V drives: 1190V

Maximum	Definition
MOTOR1_CURRENT_LIMIT_MAX [1000.0%]	**Maximum current limit settings for motor map 1** This maximum current limit setting is the maximum applied to the current limit parameters in motor map 1. **Open Loop** $\text{Maximum current limit} = \frac{\sqrt{\left[\left[\frac{\text{Maximum current}}{\text{Motor rated current}}\right]^2 + PF^2 - 1\right]} \times 100\%}{PF}$ Where: The Maximum current is either 1.1 x drive rating or 1.5 x K_C if the motor rated current set in Pr **5.07** is more than the maximum Heavy Duty current rating given by Pr **11.32**. Motor rated current is given by Pr **5.07** PF is motor rated power factor given by Pr **5.10** **RFC** $\text{Maximum current limit} = \frac{\sqrt{\left[\left[\frac{\text{Maximum current}}{\text{Motor rated current}}\right]^2 + \cos(\varphi_1)^2 - 1\right]} \times 100\%}{\cos(\varphi_1)}$ Where: The Maximum current is either 1.1 x drive rating or 1.75 x K_C if the motor rated current set in Pr **5.07** is more than or equal to the maximum Heavy Duty current rating given by Pr **11.32**. Motor rated current is given by Pr **5.07** φ_1 = cos-1(PF) - φ_2. This is measured by the drive during an autotune. See Menu 4 in the *Advanced User Guide* for more information regarding φ2. PF is motor rated power factor given by Pr **5.10**
MOTOR2_CURRENT_LIMIT_MAX [1000.0%]	**Maximum current limit settings for motor map 2** This maximum current limit setting is the maximum applied to the current limit parameters in motor map 2. The formulae for MOTOR2_CURRENT_LIMIT_MAX are the same for MOTOR1_CURRENT_LIMIT_MAX except that Pr **5.07** is replaced with Pr **21.07** and Pr **5.10** is replaced with Pr **21.10**.
TORQUE_PROD_CURRENT_MAX [1000.0%]	**Maximum torque producing current** This is used as a maximum for torque and torque producing current parameters. It is MOTOR1_CURRENT_LIMIT_MAX or MOTOR2_CURRENT_LIMIT_MAX depending on which motor map is currently active.
USER_CURRENT_MAX [1000.0%]	**Current parameter limit selected by the user** The user can select a maximum for Pr **4.08** (torque reference) and Pr **4.20** (percentage load) to give suitable scaling for analog I/O with Pr **4.24**. This maximum is subject to a limit of MOTOR1_CURRENT_LIMIT_MAX. or MOTOR2_CURRENT_LIMIT_MAX depending on which motor map is currently active. USER_CURRENT_MAX = Pr **4.24**
POWER_MAX [9999.99kW]	**Maximum power in kW** The maximum power has been chosen to allow for the maximum power that can be output by the drive with maximum AC output voltage, maximum controlled current and unity power factor. Therefore: POWER_MAX = $\sqrt{3}$ x AC_VOLTAGE_MAX x DRIVE_CURRENT_MAX

The values given in square brackets indicate the absolute maximum value allowed for the variable maximum.

Table 12-5 Maximum motor rated current

Model	K_C	Maximum Normal Duty current rating A
BA1201	4.3	5.2
BA1202	5.8	6.8
BA1203	7.5	9.6
BA1204	10.6	11
BA2201	12.6	15.5
BA2202	17.0	22.0
BA2203	25.0	28.0
BA3201	31.0	42.0
BA3202	42.0	54.0
BA4201	56.0	68.0
BA4202	68.0	80.0
BA4203	80.0	104.0
BA1401	2.1	2.8
BA1402	3.0	3.8
BA1403	4.2	5.0
BA1404	5.8	6.9
BA1405	7.6	8.8
BA1406	9.5	11.0
BA2401	13.0	15.3
BA2402	16.5	21.0
BA2403	23.0	29.0
BA3401	32.0	35.0
BA3402	40.0	43.0
BA3403	46.0	56.0
BA4401	60.0	68.0
BA4402	74.0	83.0
BA4403	96.0	104.0
BA5401	124.0	138.0
BA5402	156.0	168.0
BA6401	154.2	202.0
BA6402	180.0	236.0
BA3501	4.1	5.4
BA3502	5.4	6.1
BA3503	6.1	8.4
BA3504	9.5	11.0
BA3505	12.0	16.0
BA3506	18.0	22.0
BA3507	22.0	27.0
BA4601	19.0	22.0
BA4602	22.0	27.0
BA4603	27.0	36.0
BA4604	36.0	43.0
BA4605	43.0	52.0
BA4606	52.0	62.0
BA5601	63.0	84.0
BA5602	85.0	99.0
BA6601	85.7	125.0
BA6602	107.1	144.0

12.1 Menu 1: Frequency / speed reference

Figure 12-1 Menu 1 logic diagram

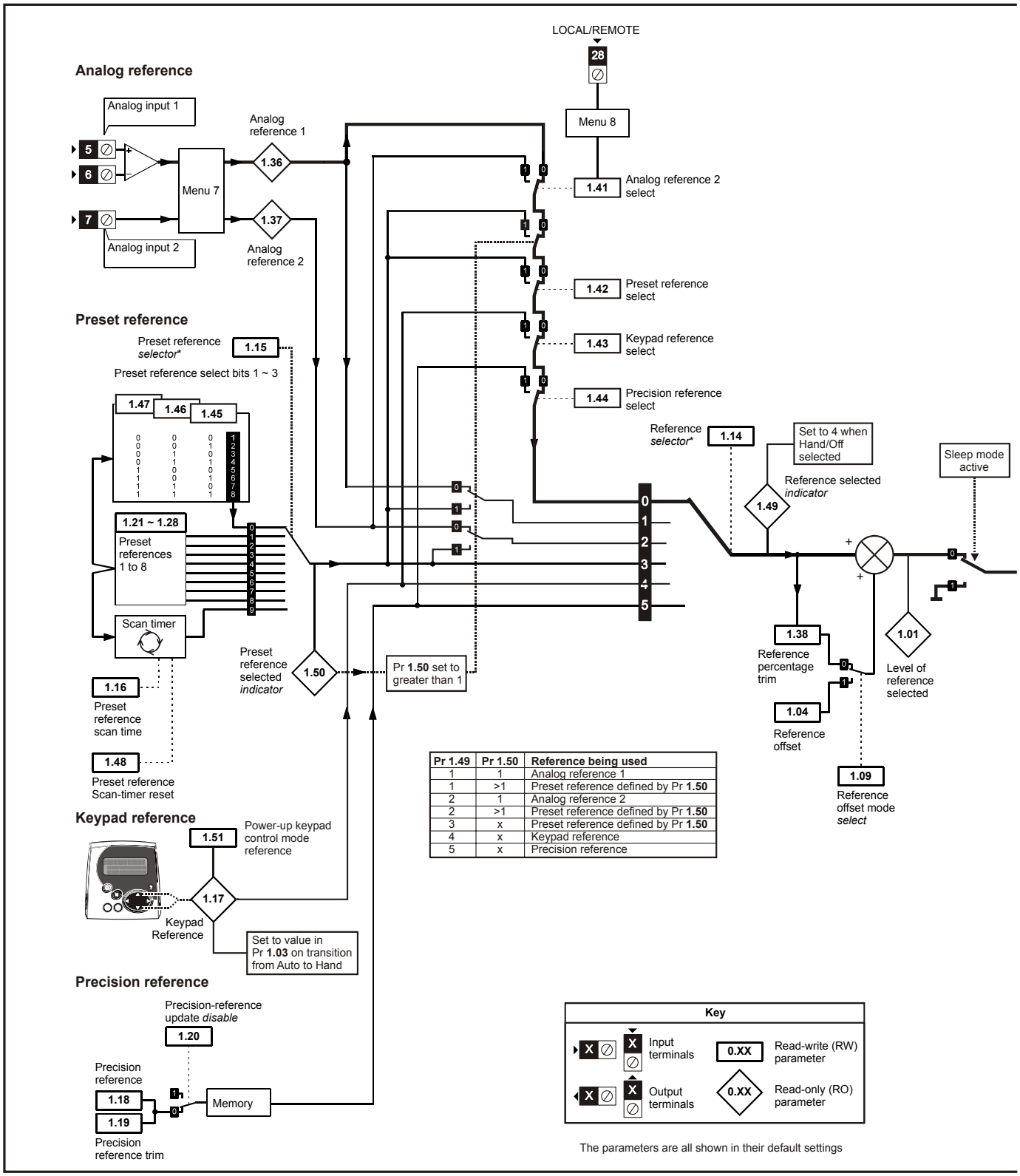

Pr 1.49	Pr 1.50	Reference being used
1	1	Analog reference 1
1	>1	Preset reference defined by Pr **1.50**
2	1	Analog reference 2
2	>1	Preset reference defined by Pr **1.50**
3	x	Preset reference defined by Pr **1.50**
4	x	Keypad reference
5	x	Precision reference

*For more information, refer to section 12.21.1 *Reference modes* on page 207

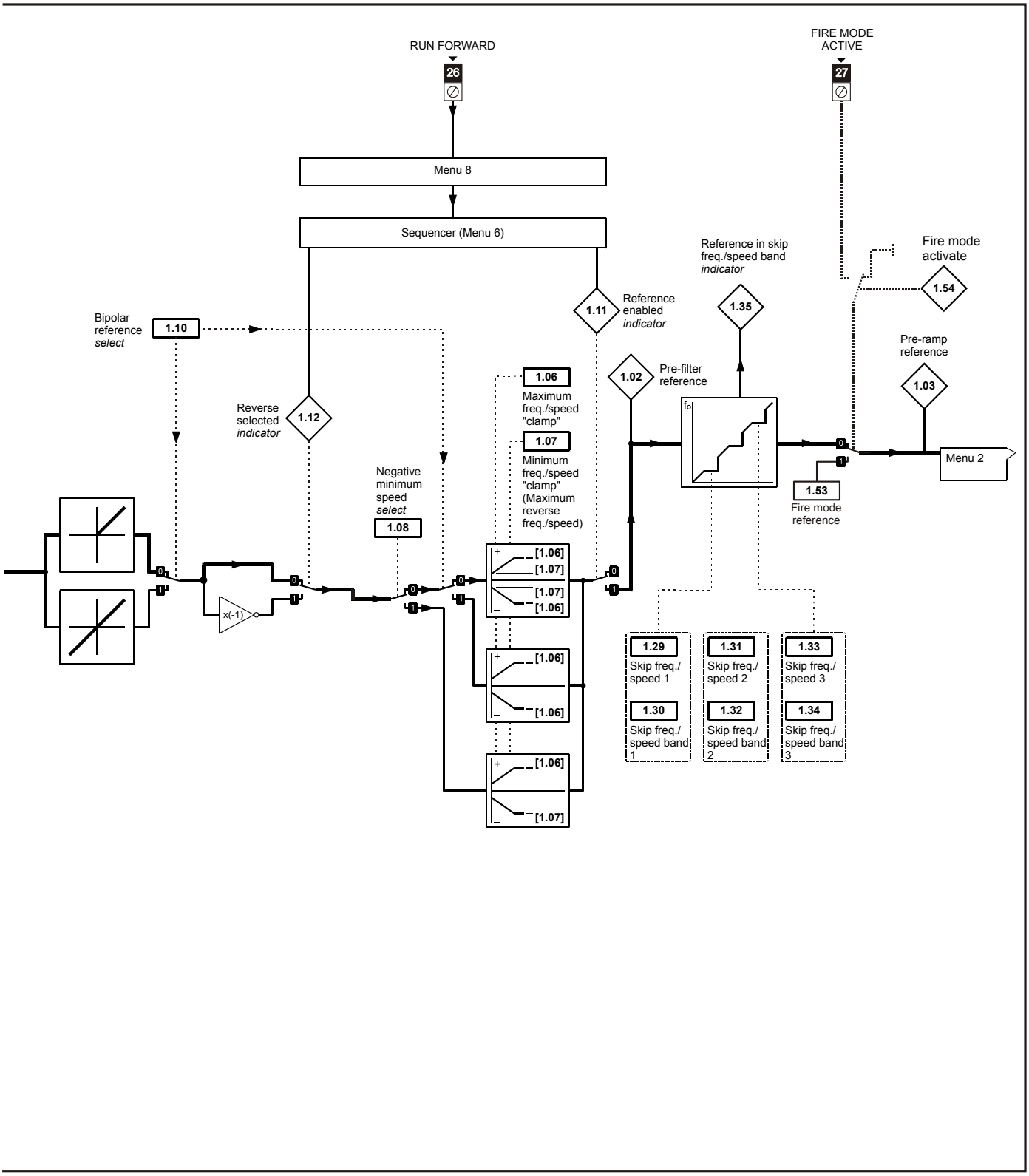
RUN FORWARD
26
FIRE MODE ACTIVE
27
Menu 8
Sequencer (Menu 6)
Reference in skip freq./speed band indicator
Fire mode activate
1.54
1.11
Reference enabled indicator
1.35
Bipolar reference select
1.10
1.02
Pre-filter reference
Pre-ramp reference
1.03
1.06
Maximum freq./speed "clamp"
Reverse selected indicator
1.12
1.07
Minimum freq./speed "clamp" (Maximum reverse freq./speed)
Negative minimum speed select
1.08
Menu 2
1.53
Fire mode reference
[1.06]
[1.07]
[1.07]
[1.06]
[1.06]
[1.06]
[1.06]
[1.07]
x(-1)
1.29
Skip freq./ speed 1
1.30
Skip freq./ speed band 1
1.31
Skip freq./ speed 2
1.32
Skip freq./ speed band 2
1.33
Skip freq./ speed 3
1.34
Skip freq./ speed band 3

Parameter			Range(⇳)		Default(⇨)		Type					
			OL	RFC	OL	RFC						
1.01	Frequency / speed reference selected		±SPEED_FREQ_MAX Hz/rpm				RO	Bi		NC	PT	
1.02	Pre-skip filter reference		±SPEED_FREQ_MAX Hz/rpm				RO	Bi		NC	PT	
1.03	Pre-ramp reference		±SPEED_FREQ_MAX Hz/rpm				RO	Bi		NC	PT	
1.04	Reference offset		±3,000.0Hz	±40,000.0 rpm	0.0		RW	Bi				US
1.05	Jog reference		0 to 400.0 Hz	0 to 4,000.0 rpm	0.0		RW	Uni				US
1.06	Maximum reference clamp	{**0.02**}	0 to 3,000.0 Hz	SPEED_LIMIT_MAX rpm	EUR> 50.0 USA> 60.0	EUR> 1,500.0 USA> 1,800.0	RW	Uni				US
1.07	Minimum reference clamp	{**0.01**}	±3,000.0 Hz	±SPEED_LIMIT_MAX rpm	0.0		RW	Bi			PT	US
1.08	Negative minimum reference clamp enable		OFF (0) or On (1)		OFF (0)		RW	Bit				US
1.09	Reference offset select		OFF (0) or On (1)		OFF (0)		RW	Bit				US
1.10	Bipolar reference enable	{**0.22**}	OFF (0) or On (1)		OFF (0)		RW	Bit				US
1.11	Reference enabled indicator		OFF (0) or On (1)				RO	Bit		NC	PT	
1.12	Reverse selected indicator		OFF (0) or On (1)				RO	Bit		NC	PT	
1.13	Jog selected indicator		OFF (0) or On (1)				RO	Bit		NC	PT	
1.14	Reference selector	{**0.05**}	A1.A2 (0), A1.Pr (1), A2.Pr (2), Pr (3), PAd (4), Prc (5)		A1.A2 (0)		RW	Txt				US
1.15	Preset reference selector		0 to 9		0		RW	Uni				US
1.16	Preset reference selector timer		0 to 400.0s		10.0		RW	Uni				US
1.17	Keypad control mode reference		±SPEED_FREQ_MAX Hz/rpm		0.0		RO	Bi		NC	PT	PS
1.18	Precision reference coarse		±SPEED_FREQ_MAX Hz/rpm		0.0		RW	Bi				US
1.19	Precision reference fine		0.000 to 0.099 Hz	0.000 to 0.099 rpm	0.000		RW	Uni				US
1.20	Precision reference update disable		OFF (0) or On (1)		OFF (0)		RW	Bit		NC		
1.21	Preset reference 1	{**0.24**}	±SPEED_FREQ_MAX Hz/rpm		0.0		RW	Bi				US
1.22	Preset reference 2	{**0.25**}	±SPEED_FREQ_MAX Hz/rpm		0.0		RW	Bi				US
1.23	Preset reference 3	{**0.26**}	±SPEED_FREQ_MAX Hz/rpm		0.0		RW	Bi				US
1.24	Preset reference 4	{**0.27**}	±SPEED_FREQ_MAX Hz/rpm		0.0		RW	Bi				US
1.25	Preset reference 5		±SPEED_FREQ_MAX Hz/rpm		0.0		RW	Bi				US
1.26	Preset reference 6		±SPEED_FREQ_MAX Hz/rpm		0.0		RW	Bi				US
1.27	Preset reference 7		±SPEED_FREQ_MAX Hz/rpm		0.0		RW	Bi				US
1.28	Preset reference 8		±SPEED_FREQ_MAX Hz/rpm		0.0		RW	Bi				US
1.29	Skip reference 1		0.0 to 3,000.0 Hz	0 to 40,000 rpm	0.0	0	RW	Uni				US
1.30	Skip reference band 1		0.0 to 25.0 Hz	0 to 250 rpm	0.5	5	RW	Uni				US
1.31	Skip reference 2		0.0 to 3,000.0 Hz	0 to 40,000 rpm	0.0	0	RW	Uni				US
1.32	Skip reference band 2		0.0 to 25.0 Hz	0 to 250 rpm	0.5	5	RW	Uni				US
1.33	Skip reference 3		0.0 to 3,000.0 Hz	0 to 40,000 rpm	0.0	0	RW	Uni				US
1.34	Skip reference band 3		0.0 to 25.0Hz	0 to 250 rpm	0.5	5	RW	Uni				US
1.35	Reference in rejection zone		OFF (0) or On (1)				RO	Bit		NC	PT	
1.36	Analog reference 1		±SPEED_FREQ_MAX Hz/rpm				RO	Bi		NC		
1.37	Analog reference 2		±SPEED_FREQ_MAX Hz/rpm				RO	Bi		NC		
1.38	Percentage trim		±100.00%		0.00		RW	Bi		NC		
1.41	Analog reference 2 select		OFF (0) or On (1)		OFF (0)		RW	Bit		NC		
1.42	Preset reference select		OFF (0) or On (1)		OFF (0)		RW	Bit		NC		
1.43	Keypad reference select		OFF (0) or On (1)		OFF (0)		RW	Bit		NC		
1.44	Precision reference select		OFF (0) or On (1)		OFF (0)		RW	Bit		NC		
1.45	Preset reference 1 select		OFF (0) or On (1)		OFF (0)		RW	Bit		NC		
1.46	Preset reference 2 select		OFF (0) or On (1)		OFF (0)		RW	Bit		NC		
1.47	Preset reference 3 select		OFF (0) or On (1)		OFF (0)		RW	Bit		NC		
1.48	Reference timer reset flag		OFF (0) or On (1)		OFF (0)		RW	Bit		NC		
1.49	Reference selected indicator		1 to 5				RO	Uni		NC	PT	
1.50	Preset reference selected indicator		1 to 8				RO	Uni		NC	PT	
1.51	Power-up keyboard control mode reference		rESEt (0), LASt (1), PrS1 (2)		rESEt (0)		RW	Txt				US
1.52	Enable hand/off/auto keypad operation mode		0 to 2		2		RW					US
1.53	Fire mode reference		±SPEED_FREQ_MAX Hz/rpm		0.0		RW					US
1.54	Fire mode activate		OFF (0) or On (1)		OFF (0)		RO	Bit		NC		

RW	Read / Write	RO	Read only	Uni	Unipolar	Bi	Bi-polar	Bit	Bit parameter	Txt	Text string		
FI	Filtered	DE	Destination	NC	Not cloned	RA	Rating dependent	PT	Protected	US	User save	PS	Power down save

12.2 Menu 2: Ramps

Figure 12-2 Menu 2 logic diagram

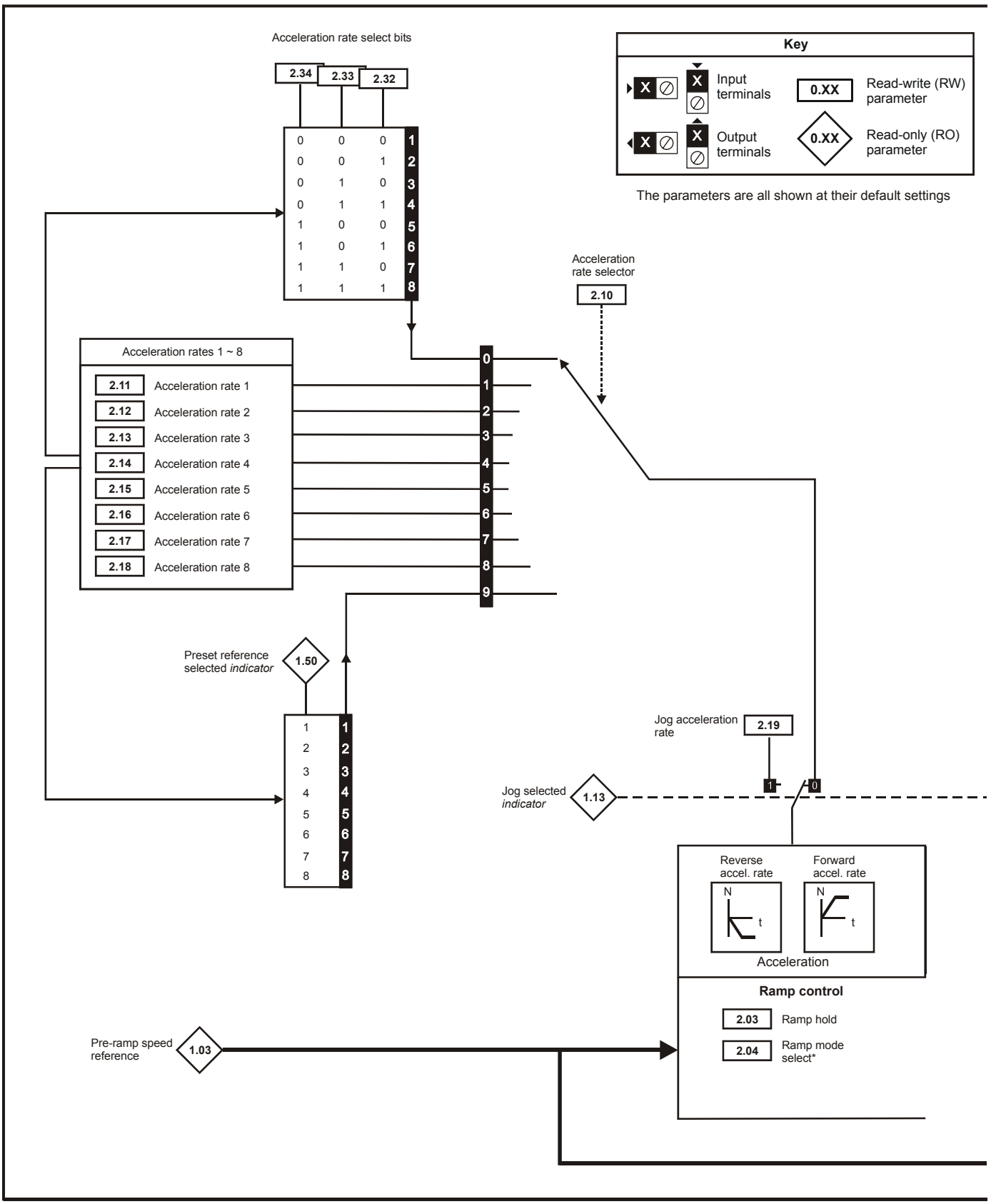

*For more information, refer to section 12.21.4 *Braking Modes* on page 209.

**For more information, refer to section 12.21.5 *S ramps* on page 210.

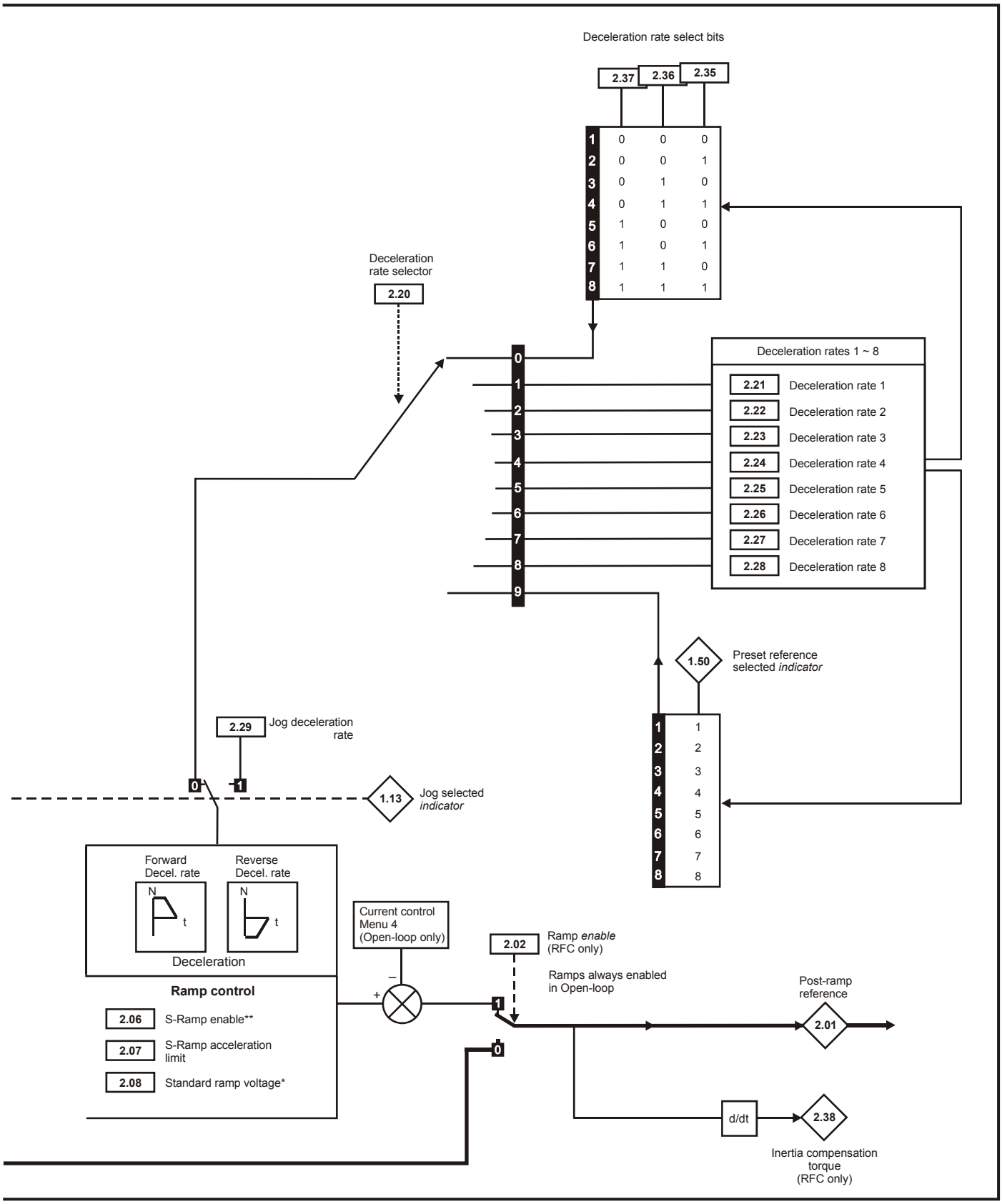
Deceleration rate select bits
2.37
2.36
2.35
1 0 0 0
2 0 0 1
3 0 1 0
4 0 1 1
5 1 0 0
6 1 0 1
7 1 1 0
8 1 1 1
Deceleration rate selector
2.20
0
1
2
3
4
5
6
7
8
9
Deceleration rates 1 ~ 8
2.21 Deceleration rate 1
2.22 Deceleration rate 2
2.23 Deceleration rate 3
2.24 Deceleration rate 4
2.25 Deceleration rate 5
2.26 Deceleration rate 6
2.27 Deceleration rate 7
2.28 Deceleration rate 8
1.50
Preset reference selected *indicator*
1 1
2 2
3 3
4 4
5 5
6 6
7 7
8 8
2.29
Jog deceleration rate
0
1
1.13
Jog selected *indicator*
Forward Decel. rate
Reverse Decel. rate
N
t
Deceleration
Ramp control
2.06 S-Ramp enable**
2.07 S-Ramp acceleration limit
2.08 Standard ramp voltage*
Current control Menu 4 (Open-loop only)
2.02
Ramp *enable* (RFC only)
Ramps always enabled in Open-loop
Post-ramp reference
2.01
d/dt
2.38
Inertia compensation torque (RFC only)

Parameter			Range(⇳)		Default(⇨)		Type					
			OL	RFC	OL	RFC						
2.01	Post ramp reference		±SPEED_FREQ_MAX Hz/rpm				RO	Bi		NC	PT	
2.02	Ramp enable	{**0.16**}		OFF (0) or On (1)		On (1)	RW	Bit				US
2.03	Ramp hold		OFF (0) or On (1)		OFF (0)		RW	Bit				US
2.04	Ramp mode select	{**0.15**}	FASt (0) Std (1) Std.hV (2)	FASt (0) Std (1)	Std (1)		RW	Txt				US
2.06	S ramp enable		OFF (0) or On (1)		OFF (0)		RW	Bit				US
2.07	S ramp acceleration limit		0.0 to 300.0 s^2/100Hz	0.000 to 100.000 s^2/1000rpm	3.1	1.500	RW	Uni				US
2.08	Standard ramp voltage		0 to DC_VOLTAGE_SET_MAX V		200V drive: 375 400V drive: EUR> 750 USA> 775 575V drive: 895 690V drive: 1075		RW	Uni		RA		US
2.10	Acceleration rate selector		0 to 9		0		RW	Uni				US
2.11	Acceleration rate 1	{**0.03**}	0.0 to 3,200.0 s/100Hz	0.000 to 3,200.000 s/1,000rpm	EUR> 40.0 USA> 33.3	EUR> 13.333 USA> 11.111	RW	Uni				US
2.12	Acceleration rate 2		0.0 to 3,200.0 s/100Hz	0.000 to 3,200.000 s/1,000rpm	EUR> 40.0 USA> 33.3	EUR> 13.333 USA> 11.111	RW	Uni				US
2.13	Acceleration rate 3		0.0 to 3,200.0 s/100Hz	0.000 to 3,200.000 s/1,000rpm	EUR> 40.0 USA> 33.3	EUR> 13.333 USA> 11.111	RW	Uni				US
2.14	Acceleration rate 4		0.0 to 3,200.0 s/100Hz	0.000 to 3,200.000 s/1,000rpm	EUR> 40.0 USA> 33.3	EUR> 13.333 USA> 11.111	RW	Uni				US
2.15	Acceleration rate 5		0.0 to 3,200.0 s/100Hz	0.000 to 3,200.000 s/1,000rpm	EUR> 40.0 USA> 33.3	EUR> 13.333 USA> 11.111	RW	Uni				US
2.16	Acceleration rate 6		0.0 to 3,200.0 s/100Hz	0.000 to 3,200.000 s/1,000rpm	EUR> 40.0 USA> 33.3	EUR> 13.333 USA> 11.111	RW	Uni				US
2.17	Acceleration rate 7		0.0 to 3,200.0 s/100Hz	0.000 to 3,200.000 s/1,000rpm	EUR> 40.0 USA> 33.3	EUR> 13.333 USA> 11.111	RW	Uni				US
2.18	Acceleration rate 8		0.0 to 3,200.0 s/100Hz	0.000 to 3,200.000 s/1,000rpm	EUR> 40.0 USA> 33.3	EUR> 13.333 USA> 11.111	RW	Uni				US
2.19	Jog acceleration rate		0.0 to 3,200.0 s/100Hz	0.000 to 3,200.000 s/1,000rpm	0.2	0.000	RW	Uni				US
2.20	Deceleration rate selector		0 to 9		0		RW	Uni				US
2.21	Deceleration rate 1	{**0.04**}	0.0 to 3,200.0 s/100Hz	0.000 to 3,200.000 s/1,000rpm	EUR> 40.0 USA> 33.3	EUR> 13.333 USA> 11.111	RW	Uni				US
2.22	Deceleration rate 2		0.0 to 3,200.0 s/100Hz	0.000 to 3,200.000 s/1,000rpm	EUR> 40.0 USA> 33.3	EUR> 13.333 USA> 11.111	RW	Uni				US
2.23	Deceleration rate 3		0.0 to 3,200.0 s/100Hz	0.000 to 3,200.000 s/1,000rpm	EUR> 40.0 USA> 33.3	EUR> 13.333 USA> 11.111	RW	Uni				US
2.24	Deceleration rate 4		0.0 to 3,200.0 s/100Hz	0.000 to 3,200.000 s/1,000rpm	EUR> 40.0 USA> 33.3	EUR> 13.333 USA> 11.111	RW	Uni				US
2.25	Deceleration rate 5		0.0 to 3,200.0 s/100Hz	0.000 to 3,200.000 s/1,000rpm	EUR> 40.0 USA> 33.3	EUR> 13.333 USA> 11.111	RW	Uni				US
2.26	Deceleration rate 6		0.0 to 3,200.0 s/100Hz	0.000 to 3,200.000 s/1,000rpm	EUR> 40.0 USA> 33.3	EUR> 13.333 USA> 11.111	RW	Uni				US
2.27	Deceleration rate 7		0.0 to 3,200.0 s/100Hz	0.000 to 3,200.000 s/1,000rpm	EUR> 40.0 USA> 33.3	EUR> 13.333 USA> 11.111	RW	Uni				US
2.28	Deceleration rate 8		0.0 to 3,200.0 s/100Hz	0.000 to 3,200.000 s/1,000rpm	EUR> 40.0 USA> 33.3	EUR> 13.333 USA> 11.111	RW	Uni				US
2.29	Jog deceleration rate		0.0 to 3,200.0 s/100Hz	0.000 to 3,200.000 s/1,000rpm	0.2	0.000	RW	Uni				US
2.32	Acceleration select bit 0		OFF (0) or On (1)		OFF (0)		RW	Bit		NC		
2.33	Acceleration select bit 1		OFF (0) or On (1)		OFF (0)		RW	Bit		NC		
2.34	Acceleration select bit 2		OFF (0) or On (1)		OFF (0)		RW	Bit		NC		
2.35	Deceleration select bit 0		OFF (0) or On (1)		OFF (0)		RW	Bit		NC		
2.36	Deceleration select bit 1		OFF (0) or On (1)		OFF (0)		RW	Bit		NC		
2.37	Deceleration select bit 2		OFF (0) or On (1)		OFF (0)		RW	Bit		NC		
2.38	Inertia compensation torque			± 1,000.0 %			RO	Bi		NC	PT	

RW	Read / Write	RO	Read only	Uni	Unipolar	Bi	Bi-polar	Bit	Bit parameter	Txt	Text string			
FI	Filtered	DE	Destination	NC	Not cloned	RA	Rating dependent	PT	Protected	US	User save	PS	Power down save	

12.3 Menu 3: Frequency slaving, speed feedback and speed control

Figure 12-3 Menu 3 Open-loop logic diagram

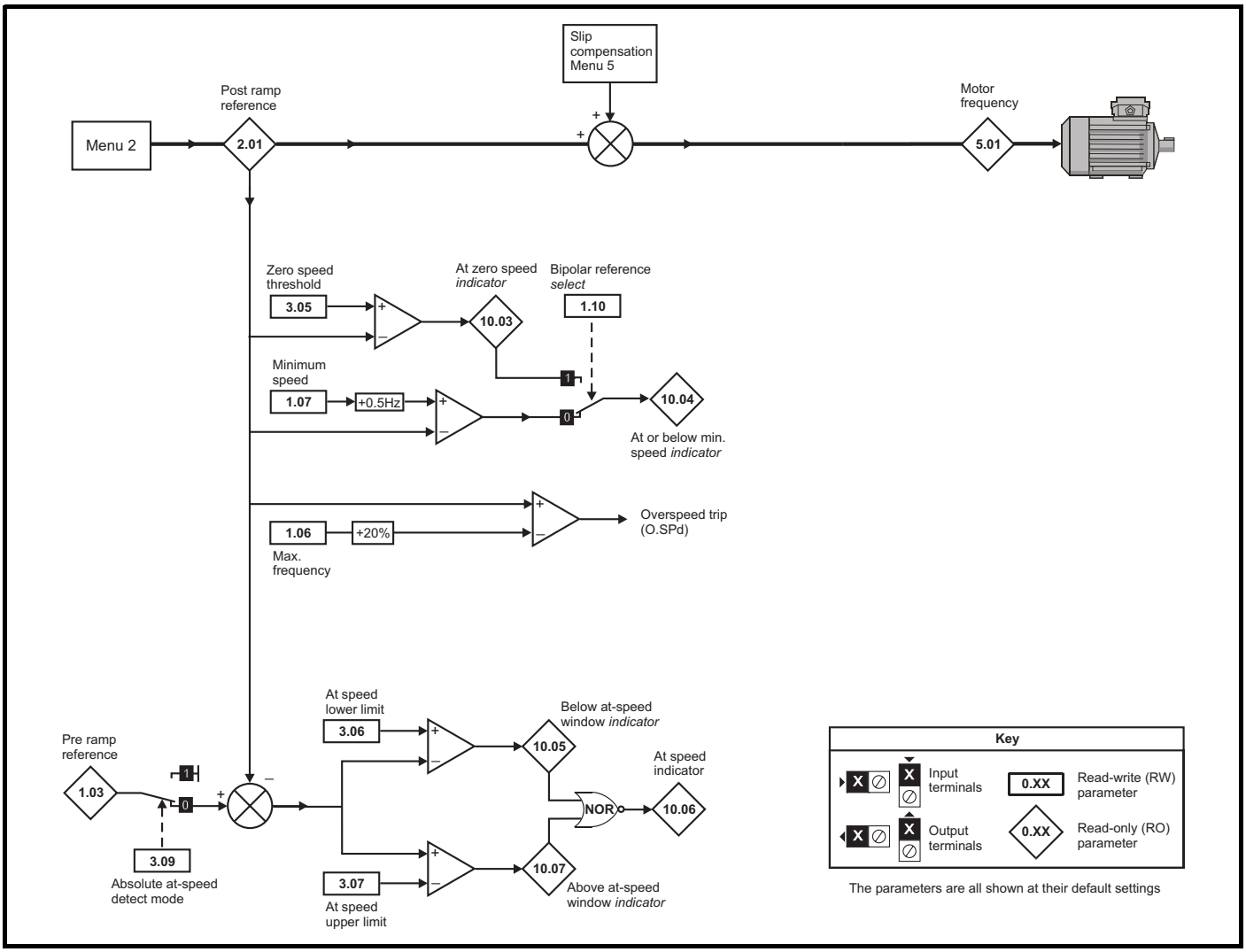

Figure 12-4 Menu 3 RFC logic diagram

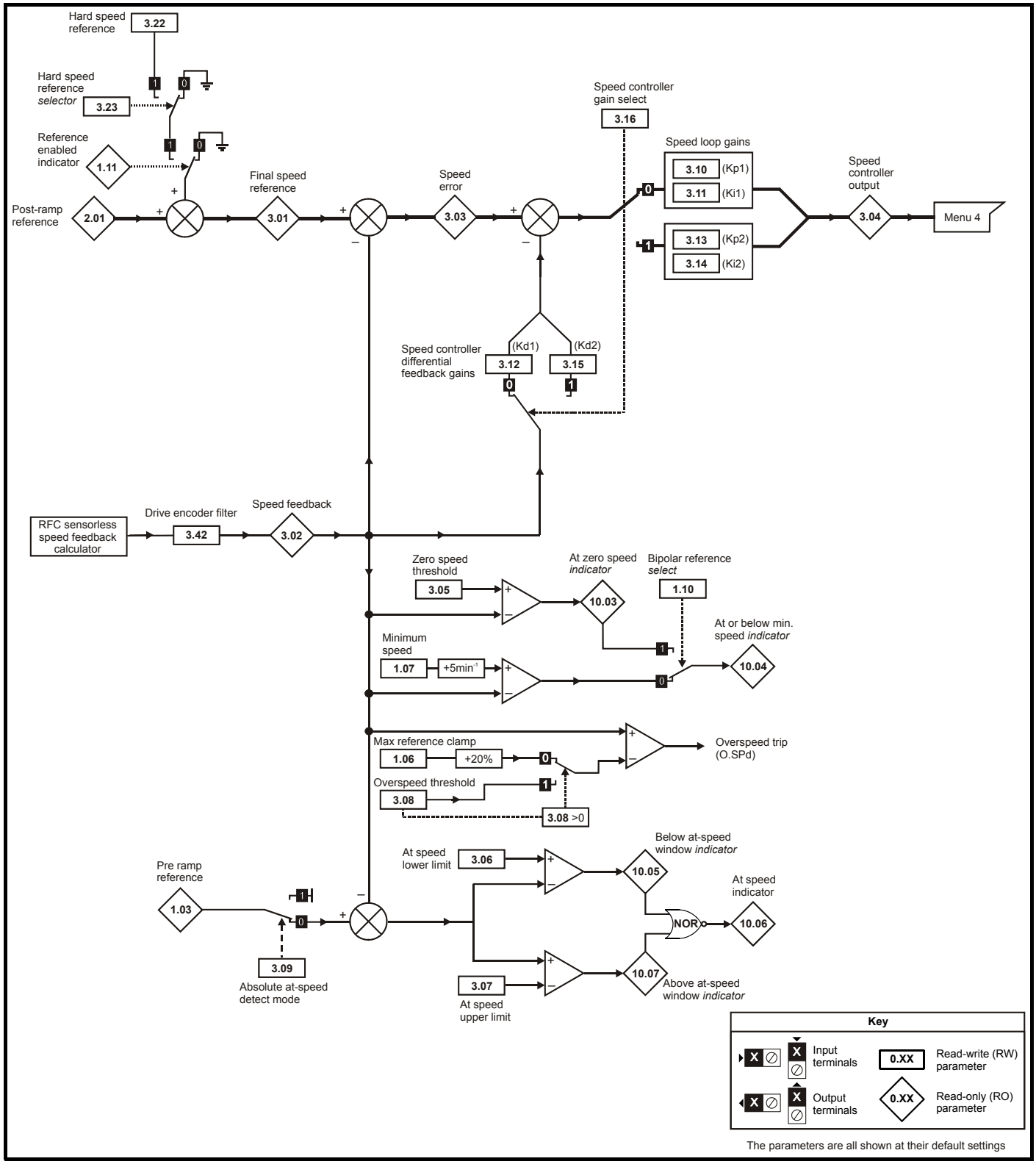

Parameter			Range(⇳)		Default(⇨)		Type					
			OL	RFC	OL	RFC						
3.01	Final speed reference			±SPEED_MAX rpm			RO	Bi	FI	NC	PT	
3.02	Speed feedback	{**0.10**}		±SPEED_MAX rpm			RO	Bi	FI	NC	PT	
3.03	Speed error			±SPEED_MAX rpm			RO	Bi	FI	NC	PT	
3.04	Speed controller output			±Torque_prod_ current_max %			RO	Bi	FI	NC	PT	
3.05	Zero speed threshold		0.0 to 20.0 Hz	0 to 200 rpm	1.0	5	RW	Uni				US
3.06	At speed lower limit		0.0 to 3,000.0 Hz	0 to 40,000 rpm	1.0	50	RW	Uni				US
3.07	At speed upper limit		0.0 to 3,000.0 Hz	0 to 40,000 rpm	1.0	50	RW	Uni				US
3.08	Overspeed threshold			0 to 40,000 rpm		0	RW	Uni				US
3.09	Absolute 'at speed' detect		OFF (0) or On (1)		OFF (0)		RW	Bit				US
3.10	Speed controller proportional gain (Kp1)	{**0.07**}		0.0000 to 6.5535 1/rad s^{-1}		0.0300	RW	Uni				US
3.11	Speed controller integral gain (Ki1)	{**0.08**}		0.00 to 655.35 s/rad s^{-1}		0.10	RW	Uni				US
3.12	Speed controller differential feedback gain (Kd1)	{**0.09**}		0.00000 to 0.65535 s^{-1}/rad s^{-1}		0.00000	RW	Uni				US
3.13	Speed controller proportional gain (Kp2)			0.0000 to 6.5535 1/rad s^{-1}		0.0300	RW	Uni				US
3.14	Speed controller integral gain (Ki2)			0.00 to 655.35 1/rad		0.10	RW	Uni				US
3.15	Speed controller differential feedback gain (Kd2)			0.00000 to 0.65535 s		0.00000	RW	Uni				US
3.16	Speed controller gain select			OFF (0) or On (1)		OFF (0)	RW	Bit				US
3.17	Speed controller set-up method			0 to 3		0	RW	Uni				US
3.18	Motor and load inertia			0.00010 to 90.00000 kg m^2		0.00000	RW	Uni				US
3.19	Compliance angle			0.0 to 359.9 °		4.0	RW	Uni				US
3.20	Bandwidth			0 to 255 Hz		10	RW	Uni				US
3.21	Damping factor			0.0 to 10.0		1.0	RW	Uni				US
3.22	Hard speed reference			±SPEED_FREQ_ MAX rpm		0.0	RW	Bi				US
3.23	Hard speed reference selector			OFF (0) or On (1)		OFF (0)	RW	Bit				US
3.24	RFC mode			3		3	RW	Uni				US
3.42	Drive encoder filter			0 (0), 1 (1), 2 (2), 4 (3), 8 (4), 16 (5) ms		0	RW	Txt				US

RW	Read / Write	RO	Read only	Uni	Unipolar	Bi	Bi-polar	Bit	Bit parameter	Txt	Text string		
FI	Filtered	DE	Destination	NC	Not cloned	RA	Rating dependent	PT	Protected	US	User save	PS	Power down save

12.4 Menu 4: Torque and current control

Figure 12-5 Menu 4 Open loop logic diagram

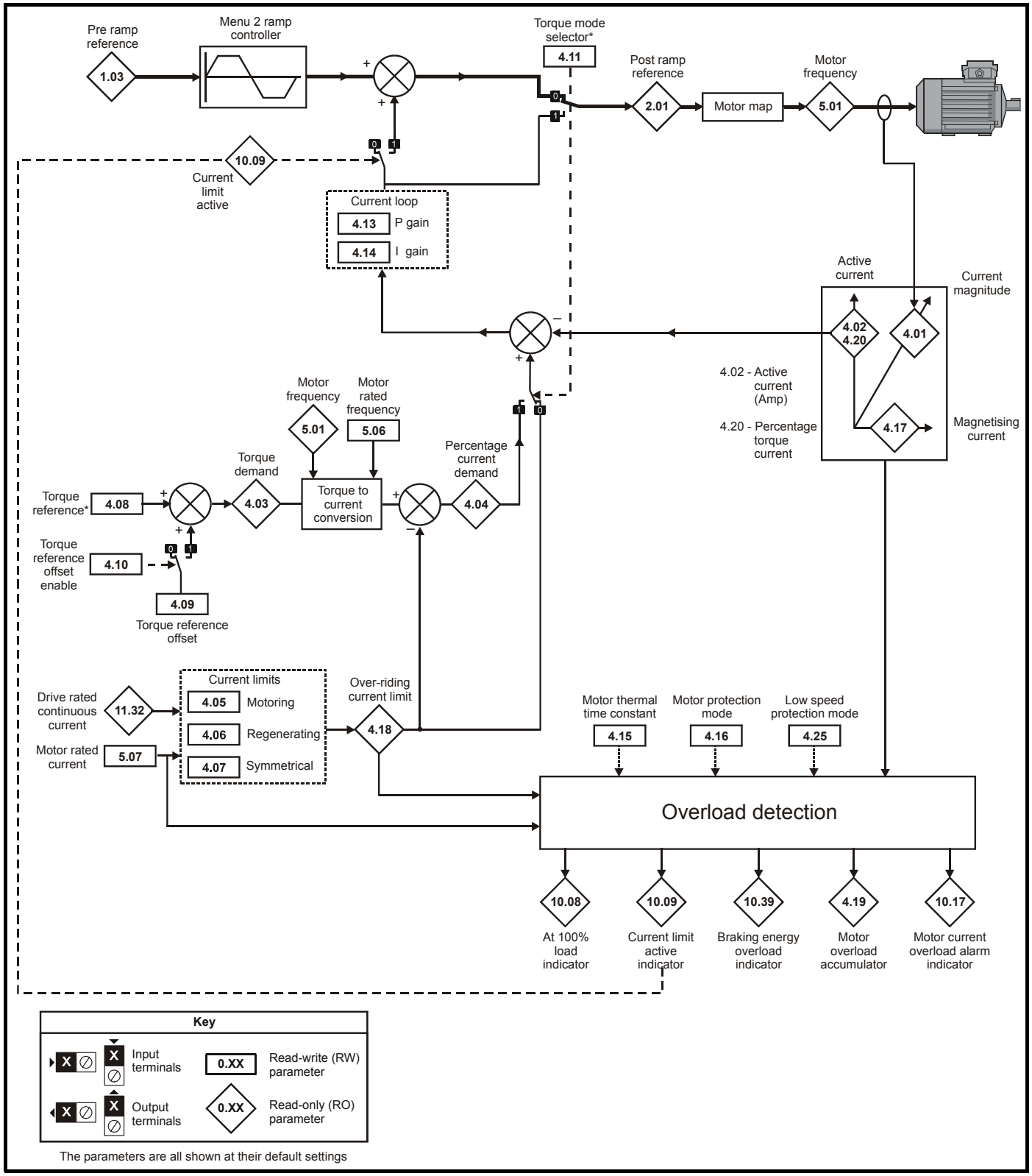

For more information, refer to section 12.21.6 *Torque modes* on page 210.

Figure 12-6 Menu 4 RFC logic diagram

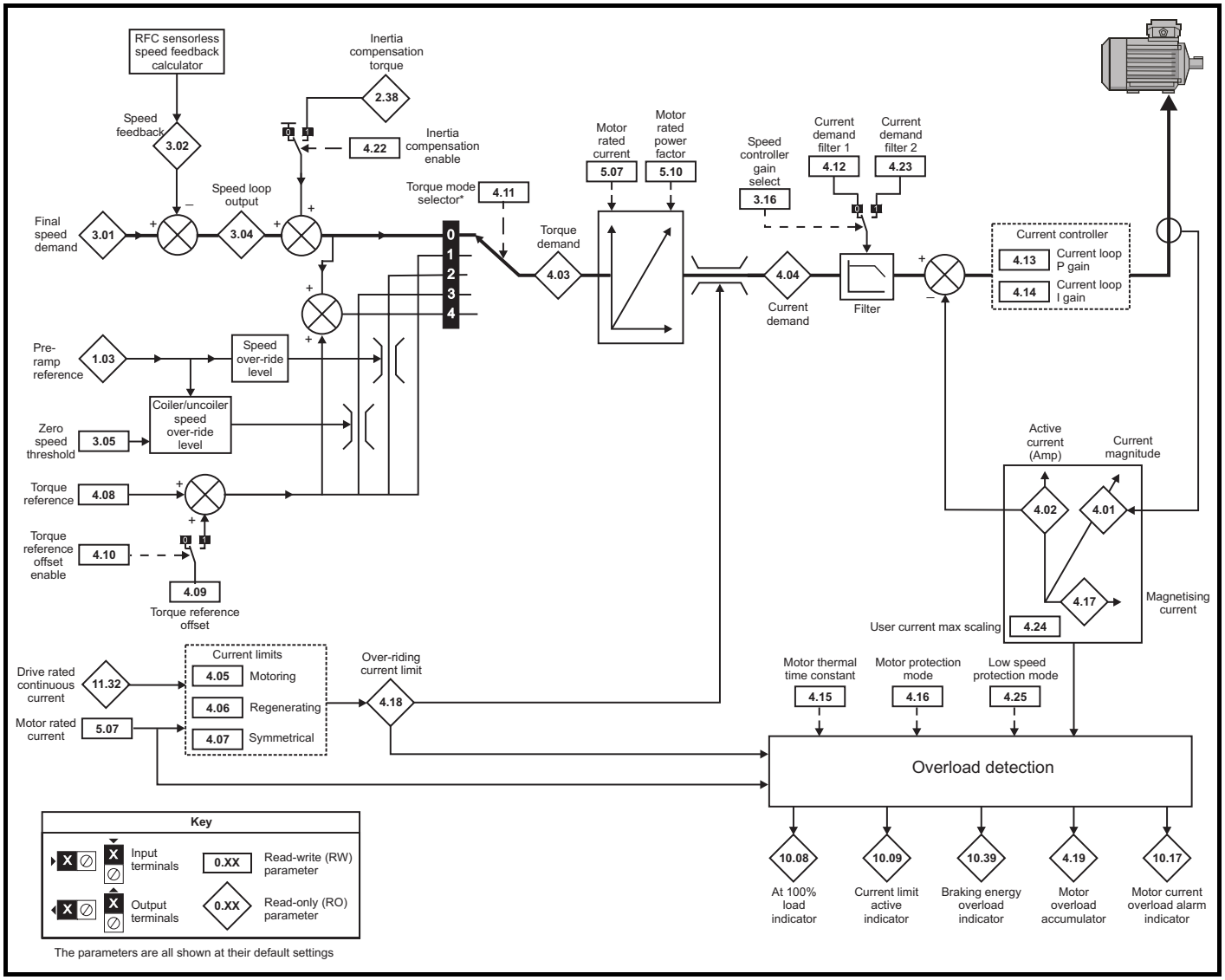

*For more information, refer to section 12.21.6 *Torque modes* on page 210.

Parameter			Range(⇳)		Default(⇨)		Type					
			OL	RFC	OL	RFC						
4.01	Total motor current	{**0.12**}	0 to DRIVE_CURRENT_MAX A				RO	Uni	FI	NC	PT	
4.02	Active current		±DRIVE_CURRENT_MAX A				RO	Bi	FI	NC	PT	
4.03	Torque demand		±TORQUE_PROD_CURRENT_MAX %				RO	Bi	FI	NC	PT	
4.04	Current demand		±TORQUE_PROD_CURRENT_MAX %				RO	Bi	FI	NC	PT	
4.05	Motoring current limit		0 to MOTOR1_CURRENT_LIMIT_MAX %		113	114	RW	Uni		RA		US
4.06	Regen current limit		0 to MOTOR1_CURRENT_LIMIT_MAX %		113	114	RW	Uni		RA		US
4.07	Symmetrical current limit	{**0.06**}	0 to MOTOR1_CURRENT_LIMIT_MAX %		113	114	RW	Uni		RA		US
4.08	Torque reference		±USER_CURRENT_MAX %		0.00		RW	Bi				US
4.09	Torque offset		±USER_CURRENT_MAX %		0.0		RW	Bi				US
4.10	Torque offset select		OFF (0) or On (1)		OFF (0)		RW	Bit				US
4.11	Torque mode selector		0 to 1	0 to 4	0		RW	Uni				US
4.12	Current demand filter 1			0.0 to 25.0 ms		0.0	RW	Uni				US
4.13	Current controller Kp gain		0 to 30,000		20	200V drive: 75 400V drive: 150 575V drive: 180 690V drive: 215	RW	Uni				US
4.14	Current controller Ki gain		0 to 30,000		40	200V drive: 1000 400V drive: 2000 575V drive: 2400 690V drive: 3000	RW	Uni				US
4.15	Thermal time constant	{**0.45**}	0.0 to 3000.0		89.0	89.0	RW	Uni				US
4.16	Thermal protection mode		0 to 1		0		RW	Bit				US
4.17	Reactive current		±DRIVE_CURRENT_MAX A				RO	Bi	FI	NC	PT	
4.18	Overriding current limit		±TORQUE_PROD_CURRENT_MAX %				RO	Uni		NC	PT	
4.19	Overload accumulator		0 to 100.0 %				RO	Uni		NC	PT	
4.20	Percentage load		±USER_CURRENT_MAX %				RO	Bi	FI	NC	PT	
4.22	Inertia compensation enable			OFF (0) or On (1)		OFF (0)	RW	Bit				US
4.23	Current demand filter 2			0.0 to 25.0 ms		0.0	RW	Uni				US
4.24	User current maximum scaling		0.0 to TORQUE_PROD_CURRENT_MAX %		113	114	RW	Uni		RA		US
4.25	Low speed thermal protection mode		OFF (0) or On (1)		On (1)		RW	Bit				US
4.26	Percentage torque		±USER_CURRENT_MAX %				RO	Bi	FI	NC	PT	
4.27	Low load detection level		0.0 to 100.0 %		0.0		RW					US
4.28	Low level detection speed / frequency threshold		0.0 to ±SPEED_FREQ_MAX Hz/rpm		0.0		RW					US
4.29	Trip in abnormal load detection		OFF (0) or On (1)		OFF (0)		RW	Bit				US

RW	Read / Write	RO	Read only	Uni	Unipolar	Bi	Bi-polar	Bit	Bit parameter	Txt	Text string			
FI	Filtered	DE	Destination	NC	Not cloned	RA	Rating dependent	PT	Protected	US	User save	PS	Power down save	

12.5 Menu 5: Motor control

Figure 12-7 Menu 5 Open-loop logic diagram

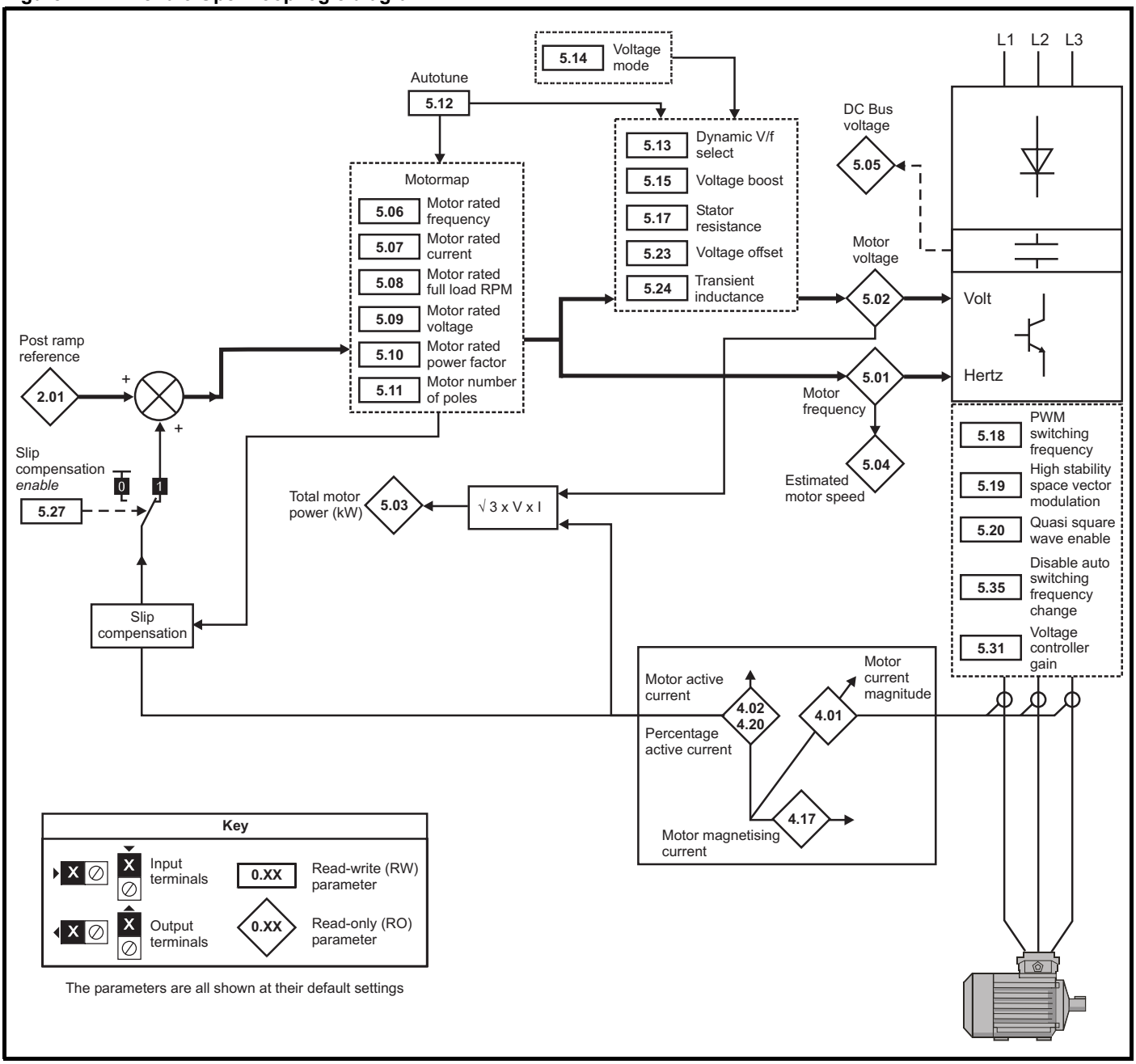

Figure 12-8 Menu 5 RFC logic diagram

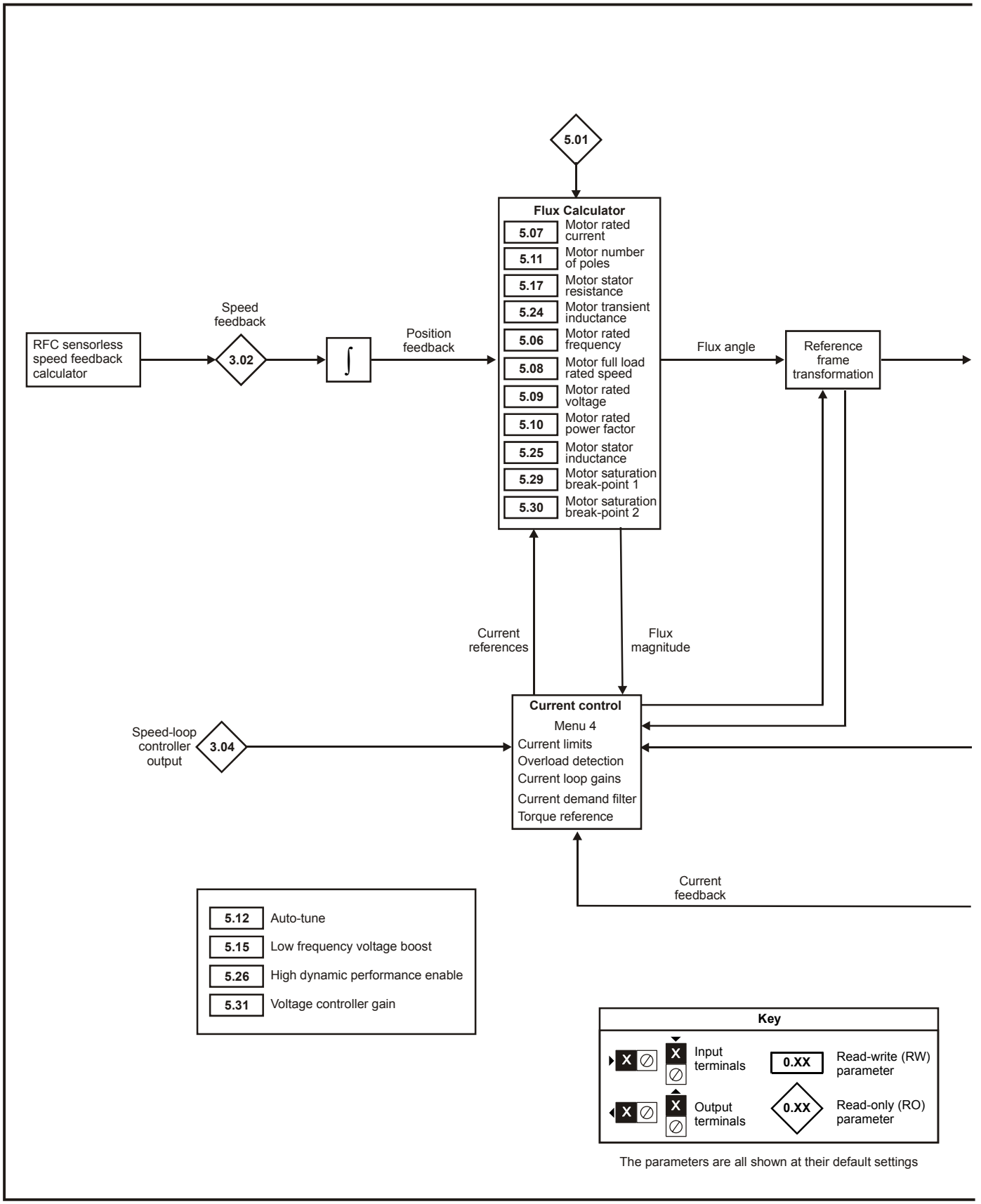

The parameters are all shown at their default settings

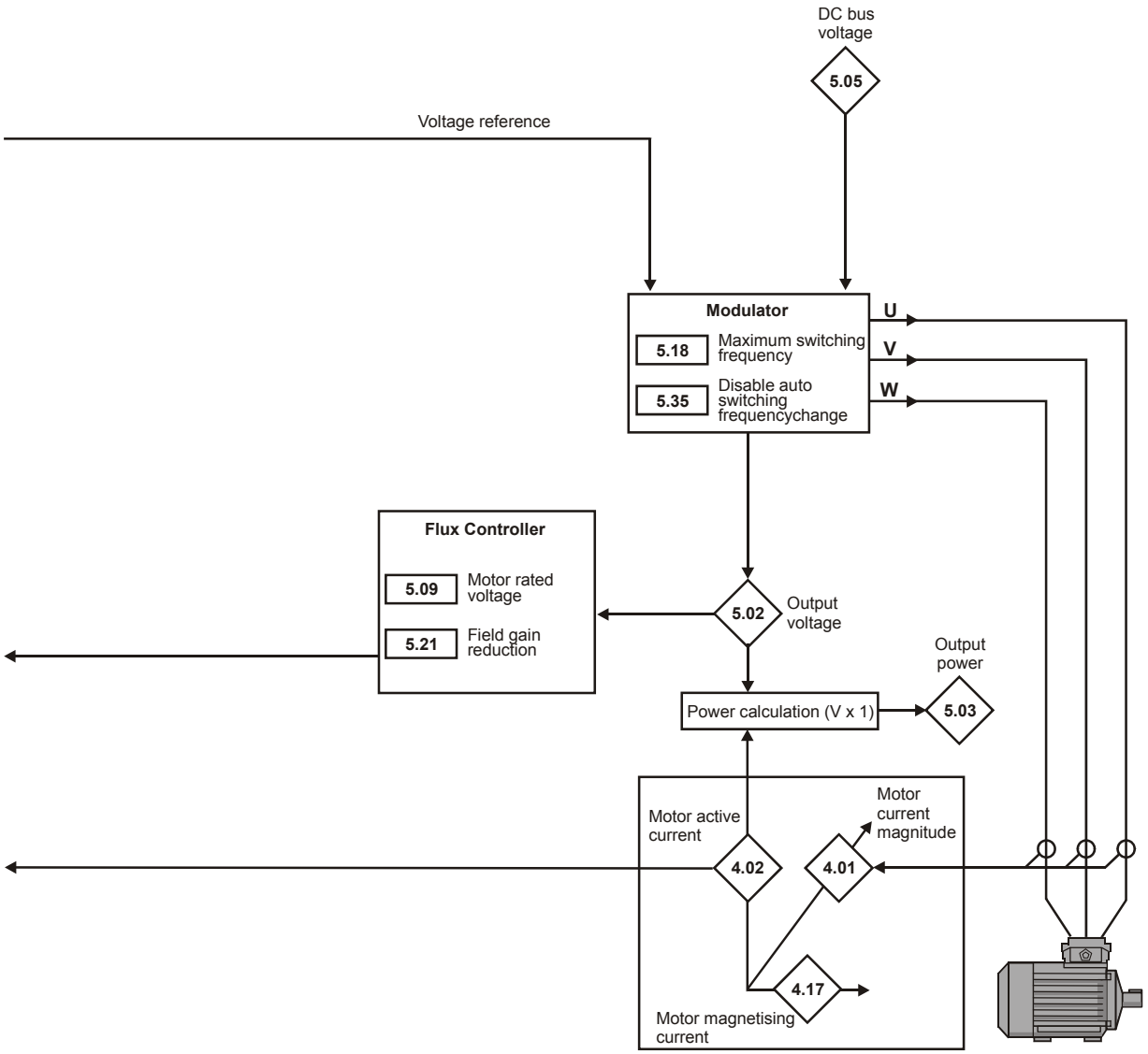
DC bus voltage
5.05
Voltage reference
Modulator
5.18
Maximum switching frequency
5.35
Disable auto switching frequencychange
U
V
W
Flux Controller
5.09
Motor rated voltage
5.21
Field gain reduction
5.02
Output voltage
Output power
Power calculation (V x 1)
5.03
Motor active current
Motor current magnitude
4.02
4.01
4.17
Motor magnetising current

Parameter			Range(⇳)		Default(⇨)		Type					
			OL	RFC	OL	RFC						
5.01	Output frequency	{**0.11**}	±SPEED_FREQ_MAX Hz	±1,250.0 Hz			RO	Bi	FI	NC	PT	
5.02	Output voltage		0 to AC_voltage_max V				RO	Uni	FI	NC	PT	
5.03	Output power		±Power_max kW				RO	Bi	FI	NC	PT	
5.04	Motor rpm	{**0.10**}	±180,000 rpm				RO	Bi	FI	NC	PT	
5.05	D.C bus voltage		0 to +DC_voltage_max V				RO	Uni	FI	NC	PT	
5.06	Rated frequency	{**0.47**}	0 to 3,000 Hz	0 to 1,250.0 Hz	EUR> 50.0, USA> 60.0		RW	Uni				US
5.07	Motor rated current	{**0.46**}	0 to Rated_current_max A		Rated_current_max		RW	Uni		RA		US
5.08	Rated load rpm / rated speed	{**0.45**}	0 to 180,000 rpm	0.00 to 40,000.00 rpm	EUR> 1,500 USA> 1,800	EUR> 1,450.00 USA> 1,770.00	RW	Uni				US
5.09	Rated voltage	{**0.44**}	0 to AC_VOLTAGE_SET_MAX V		200V drive: 230 400V drive: EUR> 400 USA> 460 575V drive: 575 690V drive: 690		RW	Uni		RA		US
5.10	Rated power factor	{**0.43**}	0.000 to 1.000		0.850		RW	Uni		RA		US
5.11	Number of motor poles	{**0.42**}	Auto to 120 Pole (0 to 60)		Auto (0)		RW	Txt				US
5.12	Autotune	{**0.40**}	0 to 2	0 to 4	0		RW	Uni		NC		
5.13	Dynamic V/F / flux optimise select	{**0.09**}	OFF (0) or On (1)		OFF (0)		RW	Bit				US
5.14	Voltage mode select	{**0.07**}	Ur_S (0), Ur (1), Fd (2), Ur_Auto (3), Ur_I (4), SrE (5)		Ur_I (4)		RW	Txt				US
5.15	Low frequency voltage boost	{**0.08**}	0.0 to 25.0 % of motor rated voltage		Size 1 to 3: 3.0 Size 4 & 5: 2.0 Size 6: 1.0		RW	Uni				US
5.17	Stator resistance		Size 1 to 5: 0.000 to 65.000 Ω Size 6: 0.000 to 65.000 x 10 mΩ		0.0		RW	Uni		RA		US
5.18	Maximum switching frequency	{**0.41**}	3 (0), 4 (1), 6 (2), 8 (3), 12 (4), 16 (5) kHz		3 (0)		RW	Txt		RA		US
5.19	High stability space vector modulation		OFF (0) or On (1)		OFF (0)		RW	Bit				US
5.20	Quasi-square enable		OFF (0) or On (1)		OFF (0)		RW	Bit				US
5.21	Field gain reduction			OFF (0) or On (1)		OFF (0)	RW	Bit				US
5.23	Voltage offset		0.0 to 25.0 V		0.0		RW	Uni		RA		US
5.24	Transient inductance (σL_s)		0.000 to 500.000 mH		0.000		RW	Uni		RA		US
5.25	Stator inductance (L_s)			0.00 to 5,000.00 mH		0.00	RW	Uni		RA		US
5.26	High dynamic performance enable			OFF (0) or On (1)		OFF (0)	RW	Bit				US
5.27	Enable slip compensation		OFF (0) or On (1)		On (1)		RW	Bit				US
5.28	Field weakening compensation disable			OFF (0) or On (1)		OFF (0)	RW	Bit				US
5.29	Motor saturation breakpoint 1			0 to 100% of rated flux		50	RW	Uni				US
5.30	Motor saturation breakpoint 2			0 to 100% of rated flux		75	RW	Uni				US
5.31	Voltage controller gain		0 to 30		1		RW	Uni				US
5.32	Motor torque per amp, K_t			0.00 to 500.00 N m A^{-1}			RO	Uni				US
5.35	Disable auto switching frequency change		OFF (0) or On (1)		OFF (0)		RW	Bit				US
5.37	Actual switching frequency		3 (0), 4 (1), 6 (2), 8 (3), 12 (4), 16 (5), 6 rEd (6), 12 rEd (7)				RO	Txt		NC	PT	
5.40	Spin start boost		0.0 to 10.0		1.0		RW	Uni				US

RW	Read / Write	RO	Read only	Uni	Unipolar	Bi	Bi-polar	Bit	Bit parameter	Txt	Text string		
FI	Filtered	DE	Destination	NC	Not cloned	RA	Rating dependent	PT	Protected	US	User save	PS	Power down save

12.6 Menu 6: Sequencer and clock

Figure 12-9 Menu 6 logic diagram

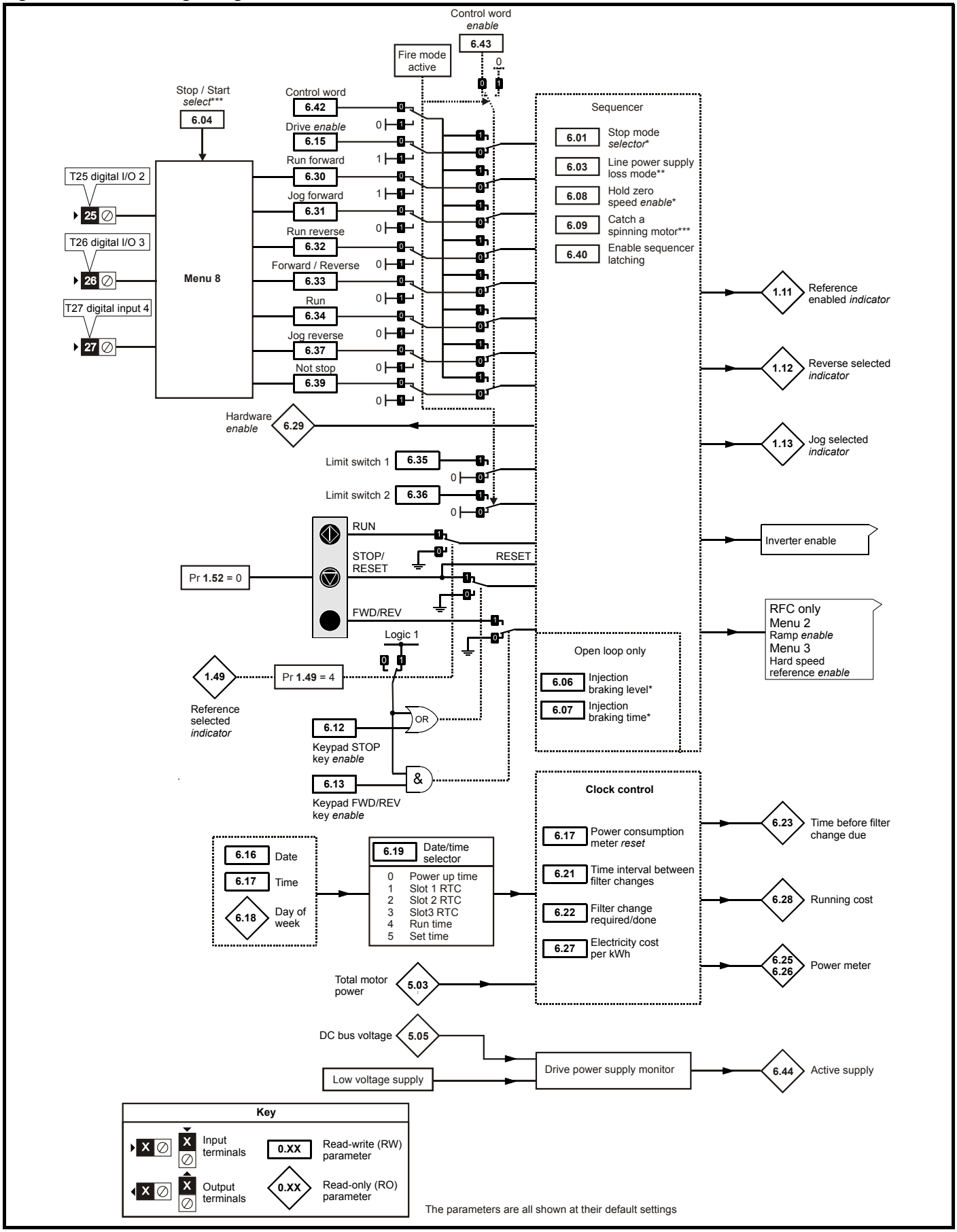

Parameter		Range(⇳)		Default(⇨)		Type					
		OL	RFC	OL	RFC						
6.01	Stop mode	COASt (0), rP (1), rP.dcl (2), dcl (3), td.dcl (4), diSAbLE (5)	COASt (0), rP (1), no.rP (2)	rP (1)		RW	Txt				US
6.03	Line power supply loss mode	diS (0), StoP (1), ridE.th (2)		diS (0)		RW	Txt				US
6.04	Start / stop logic select	0 to 4		4		RW	Uni				US
6.06	Injection braking level	0 to 150.0%		100.0%		RW	Uni		RA		US
6.07	Injection braking time	0.0 to 25.0s		1.0		RW	Uni				US
6.08	Hold zero speed / Motor pre-heat enable	OFF (0) or On (1)		OFF (0)		RW	Bit				US
6.09	Catch a spinning motor {**0.38**}	0 to 3	0 to 1	0	1	RW	Uni				US
6.12	Enable stop key	OFF (0) or On (1)		OFF (0)		RW	Bit				US
6.15	Drive enable	OFF (0) or On (1)		On (1)		RW	Bit				US
6.16	Date	0 to 311299				RW	Uni		NC	PT	
6.17	Time	0.00 to 23.59				RW	Uni		NC	PT	
6.18	Day of week	0 to 6				RO	Uni		NC	PT	
6.19	Date/time selection	0 to 5		3		RW	Uni				
6.20	Date format	Std (0), Std.ds (1), US (2), US.ds (3)		EUR> Std (0), USA> US (2)		RW	Txt				US
6.21	Time between filter changes	0 to 30,000 hrs		0		RW	Uni				US
6.22	Filter change required / change done	OFF (0) or On (1)		OFF (0)		RW	Bit			PT	
6.23	Time before filter change due	0 to 30,000 hrs				RO	Uni		NC	PT	PS
6.24	Reset energy meter	OFF (0) or On (1)		OFF (0)		RW	Bit		NC		
6.25	Energy meter: MWh	±999.9 MWh				RO	Bi		NC	PT	PS
6.26	Energy meter: kWh	±99.99 kWh				RO	Bi		NC	PT	PS
6.27	Energy cost per kWh	0.0 to 600.0				RW	Uni		NC	PT	PS
6.28	Running cost	±32,000				RO	Bi		NC	PT	
6.29	Hardware enable	OFF (0) or On (1)				RO	Bit		NC	PT	
6.30	Sequencing bit: Run forward	OFF (0) or On (1)		OFF (0)		RW	Bit		NC		
6.31	Sequencing bit: Jog forward	OFF (0) or On (1)		OFF (0)		RW	Bit		NC		
6.32	Sequencing bit: Run reverse	OFF (0) or On (1)		OFF (0)		RW	Bit		NC		
6.33	Sequencing bit: Forward / reverse	OFF (0) or On (1)		OFF (0)		RW	Bit		NC		
6.34	Sequencing bit: Run	OFF (0) or On (1)		OFF (0)		RW	Bit		NC		
6.35	Forward limit switch	OFF (0) or On (1)		OFF (0)		RW	Bit		NC		
6.36	Reverse limit switch	OFF (0) or On (1)		OFF (0)		RW	Bit		NC		
6.37	Sequencing bit: Jog reverse	OFF (0) or On (1)		OFF (0)		RW	Bit		NC		
6.39	Sequencing bit: Not stop	OFF (0) or On (1)		OFF (0)		RW	Bit		NC		
6.40	Enable sequencer latching	OFF (0) or On (1)		OFF (0)		RW	Bit				US
6.41	Drive event flags	0 to 65,535		0		RW	Uni		NC		
6.42	Control word	0 to 32,767		0		RW	Uni		NC		
6.43	Control word enable	OFF (0) or On (1)		OFF (0)		RW	Bit				US
6.44	Active supply	OFF (0) or On (1)				RO	Bit		NC	PT	
6.45	Force cooling fan to run at full speed	OFF (0) or On (1)		OFF (0)		RW	Bit				US
6.46	Normal low voltage supply	Size 1: 48V Size 2, 3 and 200V size 4: 48V to 72V 400V size 4 to 6: 48V to 96V		48		RW	Uni			PT	US
6.47	Disable phase loss detection from input rectifier	OFF (0) or On (1)		OFF (0)		RW	Bit				US
6.48	Line power supply loss ride through detection level	0 to DC_VOLTAGE_SET_MAX V		200V drive: 205, 400V drive: 410, 575V drive: 540, 690V drive: 540		RW	Uni		RA		US
6.49	Disable multi-module drive module number storing on trip	OFF (0) or On (1)		OFF (0)		RW	Bit				US
6.50	Drive comms state	drv (0), SLot 1(1), SLot 2 (2)				RO	Txt		NC	PT	
6.51	External rectifier not active	OFF (0) or On (1)		OFF (0)		RW	Bit				
6.52	Motor pre-heat current magnitude {**0.39**}	0 to 100 %		0		RW	Uni				US
6.53	Sleep/wake threshold {**0.15**}	±SPEED_FREQ_MAX Hz/rpm				RW	Uni				US
6.54	Sleep/wake delay time {**0.16**}	0.0 to 250.0 s		10.0		RW	Uni				US

RW	Read / Write	RO	Read only	Uni	Unipolar	Bi	Bi-polar	Bit	Bit parameter	Txt	Text string		
FI	Filtered	DE	Destination	NC	Not cloned	RA	Rating dependent	PT	Protected	US	User save	PS	Power down save

*For more information, refer to section 12.21.7 *Stop modes* on page 210.

**For more information, refer to section 12.21.8 *Line power supply loss modes* on page 211.

***For more information, refer to section 12.21.9 *Catch a spinning motor* on page 213.

12.7 Menu 7: Analog I/O

Figure 12-10 Menu 7 logic diagram

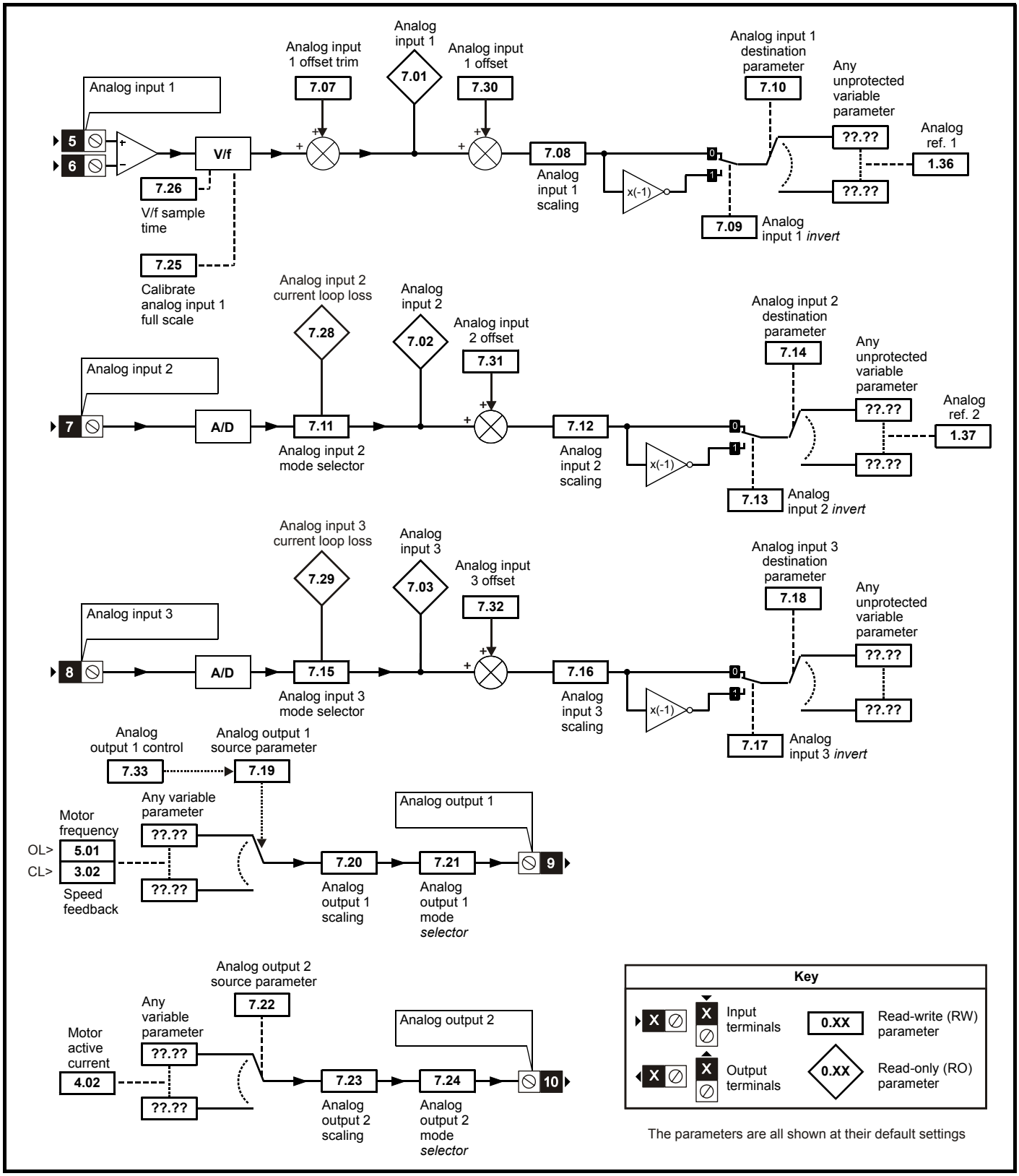

The parameters are all shown at their default settings

Parameter		Range(⇳)		Default(⇨)		Type					
		OL	RFC	OL	RFC						
7.01	T5/6 analog input 1 level	±100.00 %				RO	Bi		NC	PT	
7.02	T7 analog input 2 level	±100.0 %				RO	Bi		NC	PT	
7.03	T8 analog input 3 level	±100.0 %				RO	Bi		NC	PT	
7.04	Power circuit temperature 1	-128 to 127 °C				RO	Bi		NC	PT	
7.05	Power circuit temperature 2	-128 to 127 °C				RO	Bi		NC	PT	
7.06	Control board temperature	-128 to 127 °C				RO	Bi		NC	PT	
7.07	T5/6 analog input 1 offset trim	±10.000 %		0.000		RW	Bi				US
7.08	T5/6 analog input 1 scaling	0 to 4.000		1.000		RW	Uni				US
7.09	T5/6 analog input 1 invert	OFF (0) or On (1)		OFF (0)		RW	Bit				US
7.10	T5/6 analog input 1 destination	Pr **0.00** to Pr **50.99**		Pr **1.36**		RW	Uni	DE		PT	US
7.11	T7 analog input 2 mode {**0.19**}	0-20 (0), 20-0 (1), 4-20.tr (2), 20-4.tr (3), 4-20 (4), 20-4 (5), VOLt (6)		4-20 (4)		RW	Txt				US
7.12	T7 analog input 2 scaling	0 to 4.000		1.000		RW	Uni				US
7.13	T7 analog input 2 invert	OFF (0) or On (1)		OFF (0)		RW	Bit				US
7.14	T7 analog input 2 destination {**0.20**}	Pr **0.00** to Pr **50.99**		Pr **1.37**		RW	Uni	DE		PT	US
7.15	T8 analog input 3 mode {**0.21**}	0-20 (0), 20-0 (1), 4-20.tr (2), 20-4.tr (3), 4-20 (4), 20-4 (5), VOLt (6), th.SC (7), th (8), th.diSP (9)		VOLt (6)		RW	Txt				US
7.16	T8 analog input 3 scaling	0 to 4.000		1.000		RW	Uni				US
7.17	T8 analog input 3 invert	OFF (0) or On (1)		OFF (0)		RW	Bit				US
7.18	T8 analog input 3 destination	Pr **0.00** to Pr **50.99**		Pr **0.00**		RW	Uni	DE		PT	US
7.19	T9 analog output 1 source	Pr **0.00** to Pr **50.99**		Pr **5.01**	Pr **3.02**	RW	Uni			PT	US
7.20	T9 analog output 1 scaling	0.000 to 4.000		1.000		RW	Uni				US
7.21	T9 analog output 1 mode	VOLt (0), 0-20 (1), 4-20 (2), H.SPd (3)		VOLt (0)		RW	Txt				US
7.22	T10 analog output 2 source	Pr **0.00** to Pr **50.99**		Pr **4.02**		RW	Uni			PT	US
7.23	T10 analog output 2 scaling	0.000 to 4.000		1.000		RW	Uni				US
7.24	T10 analog output 2 mode	VOLt (0), 0-20 (1), 4-20 (2), H.SPd (3)		VOLt (0)		RW	Txt				US
7.25	Calibrate T5/6 analog input 1 full scale	OFF (0) or On (1)		OFF (0)		RW	Bit		NC		
7.26	T5/6 analog input 1 sample time	0 to 8.0 ms		4.0		RW	Uni				US
7.28	T7 analog input 2 current loop loss	OFF (0) or On (1)				RO	Bit		NC	PT	
7.29	T8 analog input 3 current loop loss	OFF (0) or On (1)				RO	Bit		NC	PT	
7.30	T5/6 analog input 1 offset	±100.00 %		0.00		RW	Bi				US
7.31	T7 analog input 2 offset	±100.0 %		0.0		RW	Bi				US
7.32	T8 analog input 3 offset	±100.0 %		0.0		RW	Bi				US
7.33	T9 analog output 1 control	Fr (0), Ld (1), AdV (2)		AdV (2)		RW	Txt				US
7.34	IGBT junction temperature	±200 °C				RO	Bi		NC	PT	
7.35	Drive thermal protection accumulator	0 to 100.0 %				RO	Uni		NC	PT	
7.36	Power circuit temperature 3	-128 to 127 °C				RO	Bi		NC	PT	

RW	Read / Write	RO	Read only	Uni	Unipolar	Bi	Bi-polar	Bit	Bit parameter	Txt	Text string		
FI	Filtered	DE	Destination	NC	Not cloned	RA	Rating dependent	PT	Protected	US	User save	PS	Power down save

12.8 Menu 8: Digital I/O

Figure 12-11 Menu 8 logic diagram

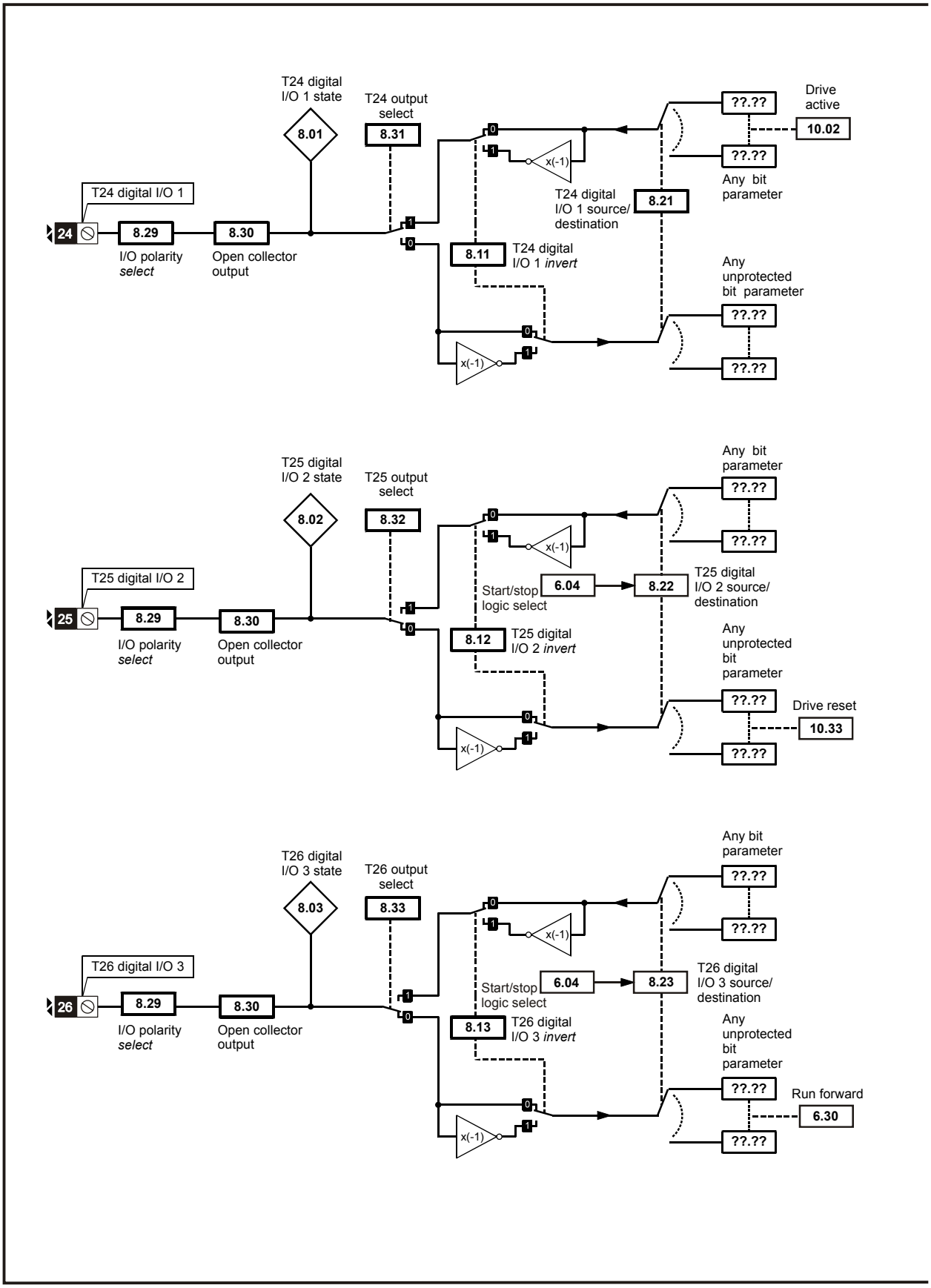

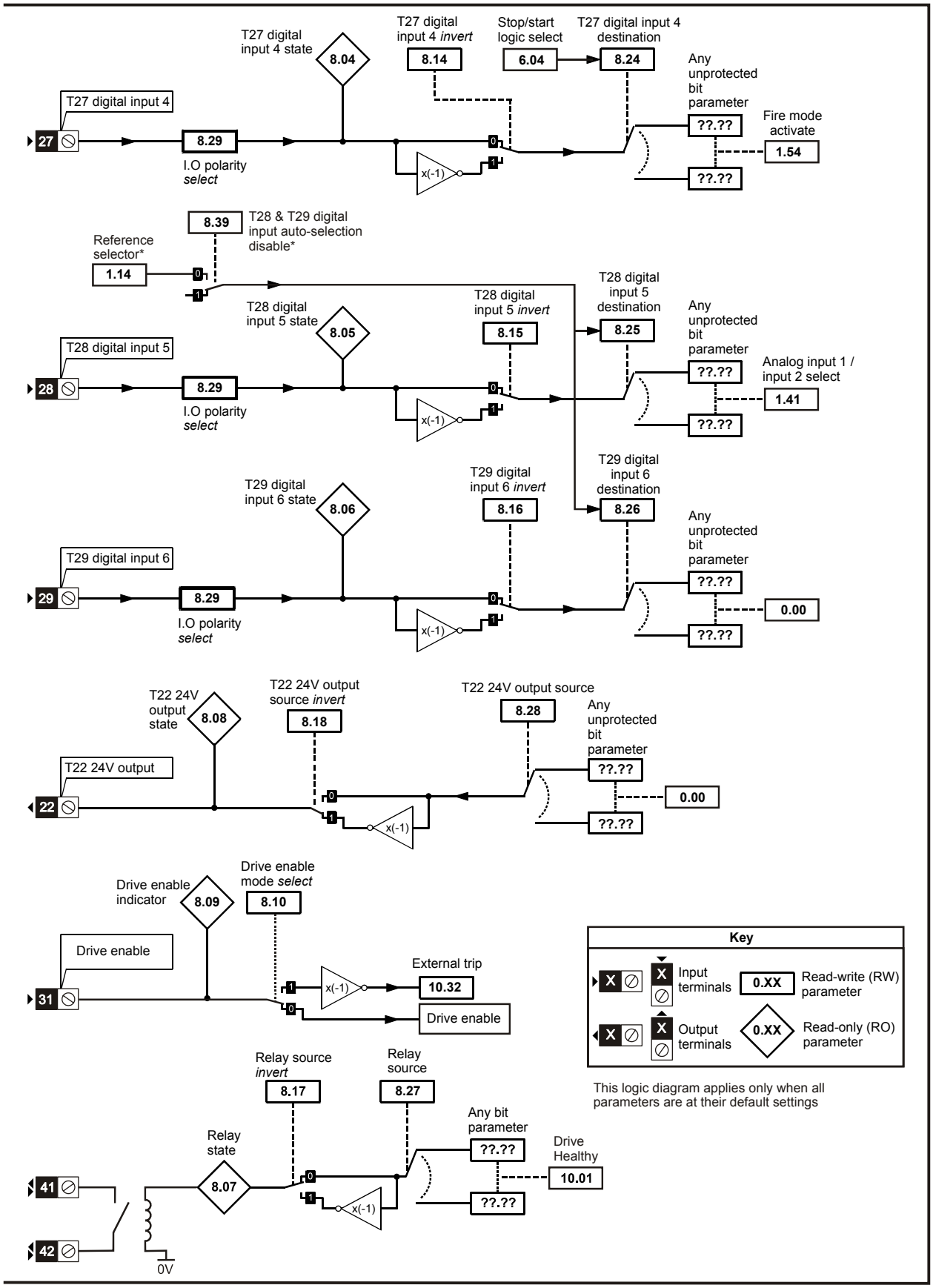
T27 digital input 4 state
8.04
T27 digital input 4 *invert*
8.14
Stop/start logic select
6.04
T27 digital input 4 destination
8.24
Any unprotected bit parameter
??.??
??.??
Fire mode activate
1.54
T27 digital input 4
27
8.29
I.O polarity *select*
x(-1)
8.39
T28 & T29 digital input auto-selection disable*
Reference selector*
1.14
T28 digital input 5 state
8.05
T28 digital input 5 *invert*
8.15
T28 digital input 5 destination
8.25
Analog input 1 / input 2 select
1.41
T28 digital input 5
28
T29 digital input 6 state
8.06
T29 digital input 6 *invert*
8.16
T29 digital input 6 destination
8.26
0.00
T29 digital input 6
29
T22 24V output state
8.08
T22 24V output source *invert*
8.18
T22 24V output source
8.28
T22 24V output
22
Drive enable indicator
8.09
Drive enable mode *select*
8.10
Drive enable
31
External trip
10.32
Drive enable
Key
Input terminals
Output terminals
0.XX
Read-write (RW) parameter
Read-only (RO) parameter
This logic diagram applies only when all parameters are at their default settings
Relay source *invert*
8.17
Relay source
8.27
Any bit parameter
Relay state
8.07
Drive Healthy
10.01
41
42
0V

Parameter		Range(⇳)		Default(⇨)		Type					
		OL	RFC	OL	RFC						
8.01	T24 digital I/O 1 state	OFF (0) or On (1)				RO	Bit		NC	PT	
8.02	T25 digital I/O 2 state	OFF (0) or On (1)				RO	Bit		NC	PT	
8.03	T26 digital I/O 3 state	OFF (0) or On (1)				RO	Bit		NC	PT	
8.04	T27 digital input 4 state	OFF (0) or On (1)				RO	Bit		NC	PT	
8.05	T28 digital input 5 state	OFF (0) or On (1)				RO	Bit		NC	PT	
8.06	T29 digital input 6 state	OFF (0) or On (1)				RO	Bit		NC	PT	
8.07	Relay state	OFF (0) or On (1)				RO	Bit		NC	PT	
8.08	T22 24V output state	OFF (0) or On (1)				RO	Bit		NC	PT	
8.09	Drive enable indicator	OFF (0) or On (1)				RO	Bit		NC	PT	
8.10	Drive enable mode select	OFF (0) or On (1)		OFF (0)		RW	Bit				US
8.11	T24 digital I/O 1 invert	OFF (0) or On (1)		OFF (0)		RW	Bit				US
8.12	T25 digital I/O 2 invert	OFF (0) or On (1)		OFF (0)		RW	Bit				US
8.13	T26 digital I/O 3 invert	OFF (0) or On (1)		OFF (0)		RW	Bit				US
8.14	T27 digital input 4 invert	OFF (0) or On (1)		OFF (0)		RW	Bit				US
8.15	T28 digital input 5 invert	OFF (0) or On (1)		OFF (0)		RW	Bit				US
8.16	T29 digital input 6 invert	OFF (0) or On (1)		OFF (0)		RW	Bit				US
8.17	Relay source invert	OFF (0) or On (1)		OFF (0)		RW	Bit				US
8.18	T22 24V output source invert	OFF (0) or On (1)		On (1)		RW	Bit				US
8.20	Digital I/O read word	0 to 511				RO	Uni		NC	PT	
8.21	T24 digital I/O 1 source/ destination	Pr **0.00** to Pr **50.99**		Pr **10.02**		RW	Uni	DE		PT	US
8.22	T25 digital I/O 2 source/ destination	Pr **0.00** to Pr **50.99**		Pr **10.33**		RW	Uni	DE		PT	US
8.23	T26 digital I/O 3 source/ destination	Pr **0.00** to Pr **50.99**		Pr **6.30**		RW	Uni	DE		PT	US
8.24	T27 digital input 4 destination	Pr **0.00** to Pr **50.99**		Pr **1.54**		RW	Uni	DE		PT	US
8.25	T28 digital input 5 destination	Pr **0.00** to Pr **50.99**		Pr **1.41**		RW	Uni	DE		PT	US
8.26	T29 digital input 6 destination	Pr **0.00** to Pr **50.99**		Pr **0.00**		RW	Uni	DE		PT	US
8.27	Relay source	Pr **0.00** to Pr **50.99**		Pr **10.01**		RW	Uni			PT	US
8.28	T22 24V output source	Pr **0.00** to Pr **50.99**		Pr **0.00**		RW	Uni			PT	US
8.29	Positive logic select	OFF (0) or On (1)		On (1)		RW	Bit			PT	US
8.30	Open collector output	OFF (0) or On (1)		OFF (0)		RW	Bit				US
8.31	T24 digital I/O 1 output select	OFF (0) or On (1)		On (1)		RW	Bit				US
8.32	T25 digital I/O 2 output select	OFF (0) or On (1)		OFF (0)		RW	Bit				US
8.33	T26 digital I/O 3 output select	OFF (0) or On (1)		OFF (0)		RW	Bit				US
8.39	T28 & T29 digital input auto-selection disable	OFF (0) or On (1)		On (1)		RW	Bit				US

RW	Read / Write	RO	Read only	Uni	Unipolar	Bi	Bi-polar	Bit	Bit parameter	Txt	Text string		
FI	Filtered	DE	Destination	NC	Not cloned	RA	Rating dependent	PT	Protected	US	User save	PS	Power down save

12.9 Menu 9: Programmable logic, motorized pot, binary sum and timers

Figure 12-12 Menu 9 logic diagram: Programmable logic

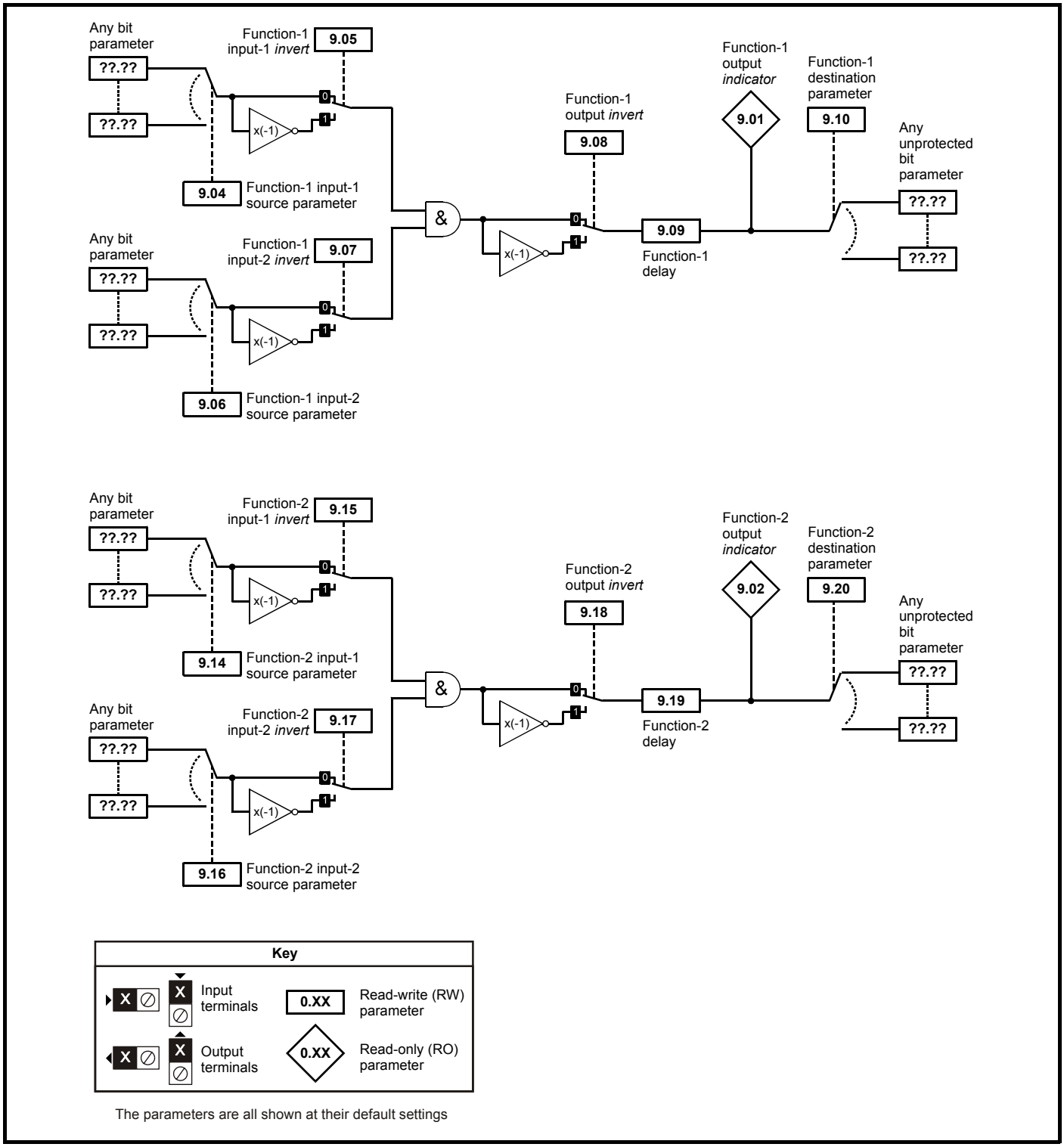

The parameters are all shown at their default settings

Figure 12-13 Menu 9 logic diagram: Motorized pot and binary sum

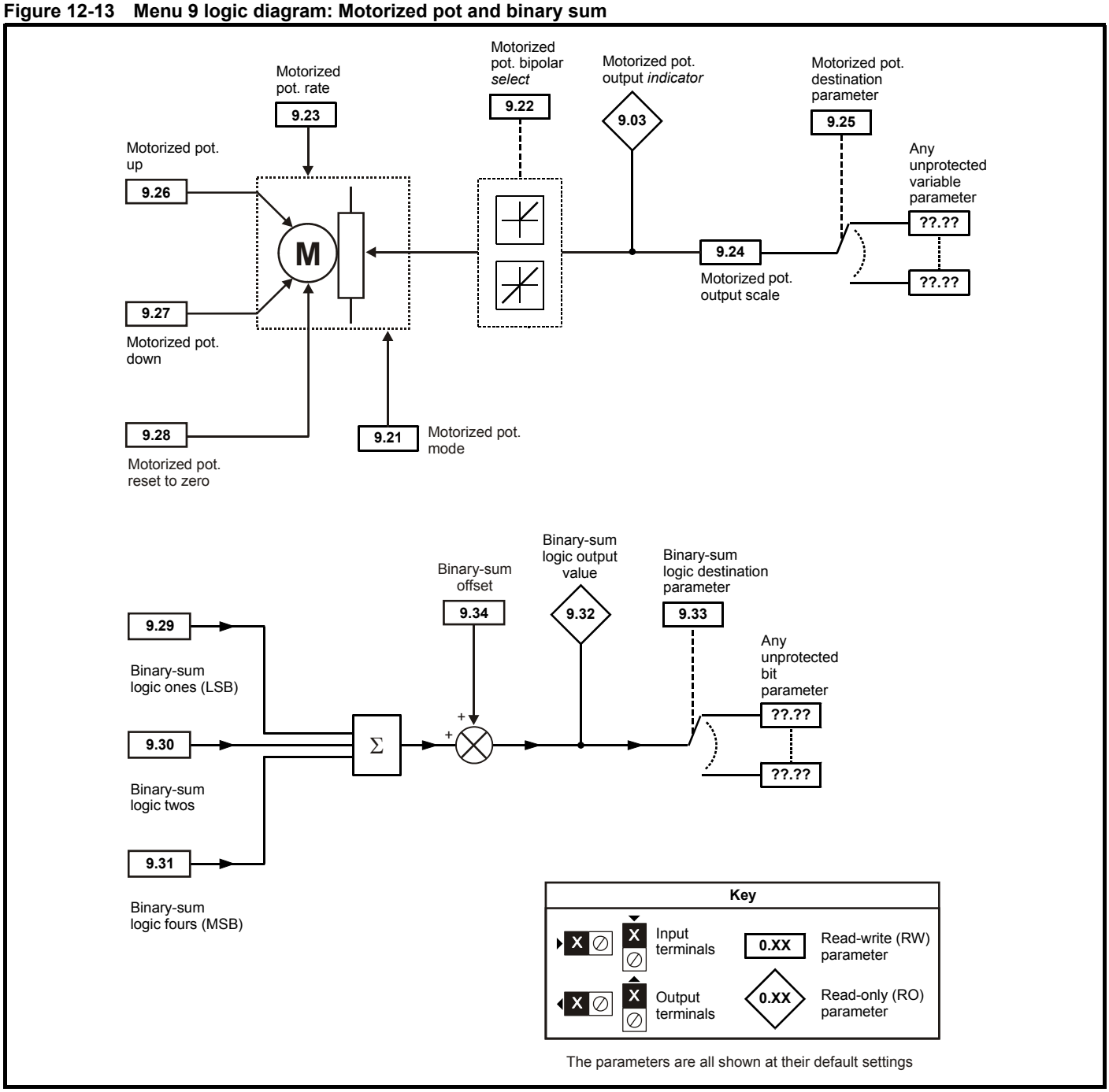

The parameters are all shown at their default settings

Figure 12-14 Menu 9 logic diagram: Timers

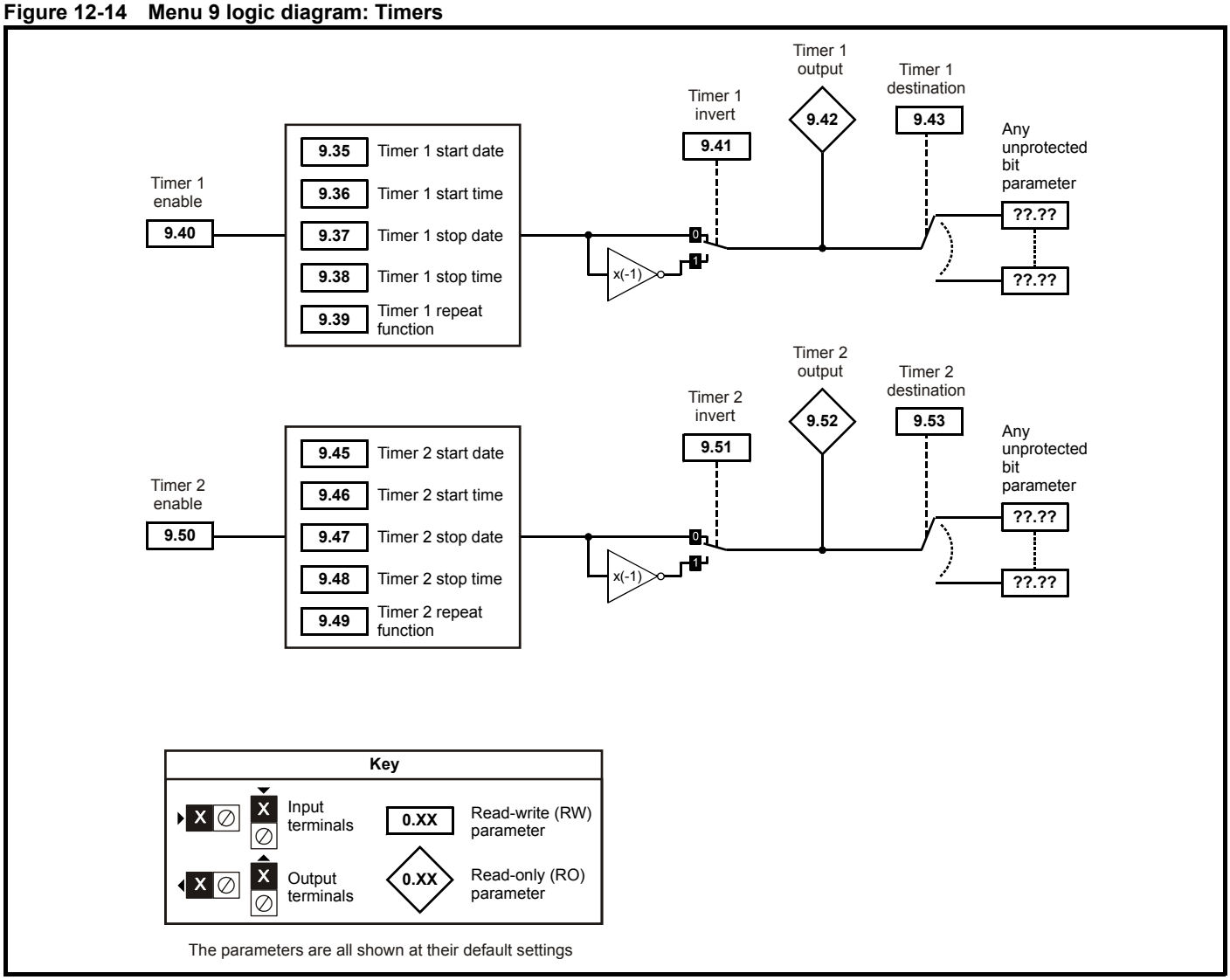

The parameters are all shown at their default settings

Parameter			Range(⇳)		Default(⇨)		Type					
			OL	RFC	OL	RFC						
9.01	Logic function 1 output		OFF (0) or On (1)				RO	Bit		NC	PT	
9.02	Logic function 2 output		OFF (0) or On (1)				RO	Bit		NC	PT	
9.03	Motorized pot output		±100.00 %				RO	Bi		NC	PT	PS
9.04	Logic function 1 source 1		Pr **0.00** to Pr **50.99**		Pr **0.00**		RW	Uni			PT	US
9.05	Logic function 1 source 1 invert		OFF (0) or On (1)		OFF (0)		RW	Bit				US
9.06	Logic function 1 source 2		Pr **0.00** to Pr **50.99**		Pr **0.00**		RW	Uni			PT	US
9.07	Logic function 1 source 2 invert		OFF (0) or On (1)		OFF (0)		RW	Bit				US
9.08	Logic function 1 output invert		OFF (0) or On (1)		OFF (0)		RW	Bit				US
9.09	Logic function 1 delay		±25.0 s		0.0		RW	Bi				US
9.10	Logic function 1 destination		Pr **0.00** to Pr **50.99**		Pr **0.00**		RW	Uni	DE		PT	US
9.14	Logic function 2 source 1		Pr **0.00** to Pr **50.99**		Pr **0.00**		RW	Uni			PT	US
9.15	Logic function 2 source 1 invert		OFF (0) or On (1)		OFF (0)		RW	Bit				US
9.16	Logic function 2 source 2		Pr **0.00** to Pr **50.99**		Pr **0.00**		RW	Uni			PT	US
9.17	Logic function 2 source 2 invert		OFF (0) or On (1)		OFF (0)		RW	Bit				US
9.18	Logic function 2 output invert		OFF (0) or On (1)		OFF (0)		RW	Bit				US
9.19	Logic function 2 delay		±25.0 s		0.0		RW	Bi				US
9.20	Logic function 2 destination		Pr **0.00** to Pr **50.99**		Pr **0.00**		RW	Uni	DE		PT	US
9.21	Motorized pot mode		0 to 3		2		RW	Uni				US
9.22	Motorized pot bipolar select		OFF (0) or On (1)		OFF (0)		RW	Bit				US
9.23	Motorized pot rate		0 to 250 s		20		RW	Uni				US
9.24	Motorized pot scale factor		0.000 to 4.000		1.000		RW	Uni				US
9.25	Motorized pot destination		Pr **0.00** to Pr **50.99**		Pr **0.00**		RW	Uni	DE		PT	US
9.26	Motorized pot up		OFF (0) or On (1)		OFF (0)		RW	Bit		NC		
9.27	Motorized pot down		OFF (0) or On (1)		OFF (0)		RW	Bit		NC		
9.28	Motorized pot reset		OFF (0) or On (1)		OFF (0)		RW	Bit		NC		
9.29	Binary sum ones input		OFF (0) or On (1)		OFF (0)		RW	Bit		NC		
9.30	Binary sum twos input		OFF (0) or On (1)		OFF (0)		RW	Bit		NC		
9.31	Binary sum fours input		OFF (0) or On (1)		OFF (0)		RW	Bit		NC		
9.32	Binary sum output		0 to 255				RO	Uni		NC	PT	
9.33	Binary sum destination		Pr **0.00** to Pr **50.99**		Pr **0.00**		RW	Uni	DE		PT	US
9.34	Binary sum offset		0 to 248		0		RW	Uni				US
9.35	Timer 1 start date	{**0.52**}	0 to 311299		0		RW	Uni			PT	US
9.36	Timer 1 start time	{**0.53**}	0.00 to 23.59		0.00		RW	Uni			PT	US
9.37	Timer 1 stop date	{**0.54**}	0 to 311299		0		RW	Uni			PT	US
9.38	Timer 1 stop time	{**0.55**}	0.00 to 23.59		0.00		RW	Uni			PT	US
9.39	Timer 1 repeat function	{**0.56**}	0 to 6		0		RW	Uni			PT	US
9.40	Timer 1 enable	{**0.57**}	OFF (0) or On (1)		OFF (0)		RW	Bit				US
9.41	Timer 1 invert		OFF (0) or On (1)		OFF (0)		RW	Bit				US
9.42	Timer 1 output		OFF (0) or On (1)				RO	Bit			PT	
9.43	Timer 1 destination	{**0.58**}	Pr **50.99**		Pr **0.00**		RW	Uni			PT	US
9.45	Timer 2 start date		0 to 311299		0		RW	Uni			PT	US
9.46	Timer 2 start time		0.00 to 23.59		0.00		RW	Uni			PT	US
9.47	Timer 2 stop date		0 to 311299		0		RW	Uni			PT	US
9.48	Timer 2 stop time		0.00 to 23.59		0.00		RW	Uni			PT	US
9.49	Timer 2 repeat function		0 to 6		0		RW	Uni			PT	US
9.50	Timer 2 enable		OFF (0) or On (1)		OFF (0)		RW	Bit				US
9.51	Timer 2 invert		OFF (0) or On (1)		OFF (0)		RW	Bit				US
9.52	Timer 2 output		OFF (0) or On (1)				RO	Bit			PT	
9.53	Timer 2 destination		Pr **50.99**		Pr **0.00**		RW	Uni			PT	US

RW	Read / Write	RO	Read only	Uni	Unipolar	Bi	Bi-polar	Bit	Bit parameter	Txt	Text string			
FI	Filtered	DE	Destination	NC	Not cloned	RA	Rating dependent	PT	Protected	US	User save	PS	Power down save	

12.10 Menu 10: Status and trips

Parameter		Range(⇳)		Default(⇨)		Type					
		OL	RFC	OL	RFC						
10.01	Drive OK	OFF (0) or On (1)				RO	Bit		NC	PT	
10.02	Drive active	OFF (0) or On (1)				RO	Bit		NC	PT	
10.03	Zero speed	OFF (0) or On (1)				RO	Bit		NC	PT	
10.04	Running at or below minimum speed	OFF (0) or On (1)				RO	Bit		NC	PT	
10.05	Below set speed	OFF (0) or On (1)				RO	Bit		NC	PT	
10.06	At speed	OFF (0) or On (1)				RO	Bit		NC	PT	
10.07	Above set speed	OFF (0) or On (1)				RO	Bit		NC	PT	
10.08	Load reached	OFF (0) or On (1)				RO	Bit		NC	PT	
10.09	Drive output is at current limit	OFF (0) or On (1)				RO	Bit		NC	PT	
10.10	Regenerating	OFF (0) or On (1)				RO	Bit		NC	PT	
10.11	Braking IGBT active	OFF (0) or On (1)				RO	Bit		NC	PT	
10.12	Braking resistor alarm	OFF (0) or On (1)				RO	Bit		NC	PT	
10.13	Direction commanded	OFF (0) or On (1) [0 = FWD, 1 = REV]				RO	Bit		NC	PT	
10.14	Direction running	OFF (0) or On (1) [0 = FWD, 1 = REV]				RO	Bit		NC	PT	
10.15	Line power supply loss	OFF (0) or On (1)				RO	Bit		NC	PT	
10.16	Under voltage active	OFF (0) or On (1)				RO	Bit		NC	PT	
10.17	Overload alarm	OFF (0) or On (1)				RO	Bit		NC	PT	
10.18	Drive over temperature alarm	OFF (0) or On (1)				RO	Bit		NC	PT	
10.19	Drive warning	OFF (0) or On (1)				RO	Bit		NC	PT	
10.20	Trip 0	0 to 232*				RO	Txt		NC	PT	PS
10.21	Trip 1	0 to 232*				RO	Txt		NC	PT	PS
10.22	Trip 2	0 to 232*				RO	Txt		NC	PT	PS
10.23	Trip 3	0 to 232*				RO	Txt		NC	PT	PS
10.24	Trip 4	0 to 232*				RO	Txt		NC	PT	PS
10.25	Trip 5	0 to 232*				RO	Txt		NC	PT	PS
10.26	Trip 6	0 to 232*				RO	Txt		NC	PT	PS
10.27	Trip 7	0 to 232*				RO	Txt		NC	PT	PS
10.28	Trip 8	0 to 232*				RO	Txt		NC	PT	PS
10.29	Trip 9	0 to 232*				RO	Txt		NC	PT	PS
10.30	Full power braking time	0.00 to 400.00 s		See Table 12-6		RW	Uni				US
10.31	Full power braking period	0.0 to 1500.0 s		See Table 12-6		RW	Uni				US
10.32	External trip	OFF (0) or On (1)		OFF (0)		RW	Bit		NC		
10.33	Drive reset	OFF (0) or On (1)		OFF (0)		RW	Bit		NC		
10.34	No. of auto-reset attempts	0 to 6 (inf)		0		RW	Txt				US
10.35	Auto-reset delay	0.0 to 25.0 s		1.0		RW	Uni				US
10.36	Hold drive OK until last attempt	OFF (0) or On (1)		OFF (0)		RW	Bit				US
10.37	Action on trip detection	0 to 7		0		RW	Uni				US
10.38	User trip	0 to 255		0		RW	Uni		NC		
10.39	Braking energy overload accumulator	0.0 to 100.0 %				RO	Uni		NC	PT	
10.40	Status word	0 to 32,767				RO	Uni		NC	PT	
10.41	Trip 0 date	0.00 to 31.12				RO	Uni		NC	PT	PS
10.42	Module number for trip 0, or, Trip 0 time	00.00 to 23.59 hours.minutes				RO	Uni		NC	PT	PS
10.43	Trip 1 date	0.00 to 31.12				RO	Uni		NC	PT	PS
10.44	Module number for trip 1, or, Trip 1 time	00.00 to 23.59 hours.minutes				RO	Uni		NC	PT	PS
10.45	Trip 2 date	0.00 to 31.12				RO	Uni		NC	PT	PS
10.46	Module number for trip 2, or, Trip 2 time	00.00 to 23.59 hours.minutes				RO	Uni		NC	PT	PS
10.47	Trip 3 date	0.00 to 31.12				RO	Uni		NC	PT	PS
10.48	Module number for trip 3, or, Trip 3 time	00.00 to 23.59 hours.minutes				RO	Uni		NC	PT	PS
10.49	Trip 4 date	0.00 to 31.12				RO	Uni		NC	PT	PS
10.50	Module number for trip 4, or, Trip 4 time	00.00 to 23.59 hours.minutes				RO	Uni		NC	PT	PS
10.51	Trip 5 date	0.00 to 31.12				RO	Uni		NC	PT	PS
10.52	Module number for trip 5, or, Trip 5 time	00.00 to 23.59 hours.minutes				RO	Uni		NC	PT	PS
10.53	Trip 6 date	0.00 to 31.12				RO	Uni		NC	PT	PS
10.54	Module number for trip 6, or, Trip 6 time	00.00 to 23.59 hours.minutes				RO	Uni		NC	PT	PS
10.55	Trip 7 date	0.00 to 31.12				RO	Uni		NC	PT	PS
10.56	Module number for trip 7, or, Trip 7 time	00.00 to 23.59 hours.minutes				RO	Uni		NC	PT	PS
10.57	Trip 8 date	0.00 to 31.12				RO	Uni		NC	PT	PS
10.58	Module number for trip 8, or, Trip 8 time	00.00 to 23.59 hours.minutes				RO	Uni		NC	PT	PS
10.59	Trip 9 date	0.00 to 31.12				RO	Uni		NC	PT	PS
10.60	Module number for trip 9, or, Trip 9 time	00.00 to 23.59 hours.minutes				RO	Uni		NC	PT	PS
10.61	Low load detected alarm	OFF (0) or On (1)				RW	Bit			PT	

RW	Read / Write	RO	Read only	Uni	Unipolar	Bi	Bi-polar	Bit	Bit parameter	Txt	Text string		
FI	Filtered	DE	Destination	NC	Not cloned	RA	Rating dependent	PT	Protected	US	User save	PS	Power down save

*The value given for the range is that obtained via serial communication. For the text string displayed on the drive, see Chapter 14 *Diagnostics* on page 235.

Table 12-6 Defaults for Pr 10.30 and Pr 10.31

Drive rating	Pr 10.30	Pr 10.31
200V, size 1 & 2	0.09	3.3
400V, size 1 & 2	0.02	3.3
All other ratings and frame sizes	0.00	

12.11 Menu 11: General drive set-up

Parameter			Range(⇳)		Default(⇨)		Type					
			OL	RFC	OL	RFC						
11.01	Parameter 0.11 set up		Pr **1.00** to Pr **50.99**		Pr **5.01**		RW	Uni			PT	US
11.02	Parameter 0.12 set up		Pr **1.00** to Pr **50.99**		Pr **4.01**		RW	Uni			PT	US
11.03	Parameter 0.13 set up		Pr **1.00** to Pr **50.99**		Pr **4.20**		RW	Uni			PT	US
11.04	Parameter 0.14 set up		Pr **1.00** to Pr **50.99**		Pr **2.04**		RW	Uni			PT	US
11.05	Parameter 0.15 set up		Pr **1.00** to Pr **50.99**		Pr **6.53**		RW	Uni			PT	US
11.06	Parameter 0.16 set up		Pr **1.00** to Pr **50.99**		Pr **6.54**		RW	Uni			PT	US
11.07	Parameter 0.17 set up		Pr **1.00** to Pr **50.99**		Pr **0.00**	Pr **4.12**	RW	Uni			PT	US
11.08	Parameter 0.18 set up		Pr **1.00** to Pr **50.99**		Pr **5.40**		RW	Uni			PT	US
11.09	Parameter 0.19 set up		Pr **1.00** to Pr **50.99**		Pr **7.11**		RW	Uni			PT	US
11.10	Parameter 0.20 set up		Pr **1.00** to Pr **50.99**		Pr **7.14**		RW	Uni			PT	US
11.11	Parameter 0.21 set up		Pr **1.00** to Pr **50.99**		Pr **7.15**		RW	Uni			PT	US
11.12	Parameter 0.22 set up		Pr **1.00** to Pr **50.99**		Pr **6.16**		RW	Uni			PT	US
11.13	Parameter 0.23 set up		Pr **1.00** to Pr **50.99**		Pr **6.17**		RW	Uni			PT	US
11.14	Parameter 0.24 set up		Pr **1.00** to Pr **50.99**		Pr **6.19**		RW	Uni			PT	US
11.15	Parameter 0.25 set up		Pr **1.00** to Pr **50.99**		Pr **6.20**		RW	Uni			PT	US
11.16	Parameter 0.26 set up		Pr **1.00** to Pr **50.99**		Pr **4.27**		RW	Uni			PT	US
11.17	Parameter 0.27 set up		Pr **1.00** to Pr **50.99**		Pr **4.28**		RW	Uni			PT	US
11.18	Parameter 0.28 set up		Pr **1.00** to Pr **50.99**		Pr **4.29**		RW	Uni			PT	US
11.19	Parameter 0.29 set up		Pr **1.00** to Pr **50.99**		Pr **11.36**		RW	Uni			PT	US
11.20	Parameter 0.30 set up		Pr **1.00** to Pr **50.99**		Pr **11.42**		RW	Uni			PT	US
11.21	Parameter scaling		0.000 to 9.999		1.000		RW	Uni				US
11.22	Parameter displayed at power-up		Pr **0.00** to **00.50**		Pr **0.10**		RW	Uni			PT	US
11.23	Serial address	{**0.37**}	0 to 247		1		RW	Uni				US
11.24	Serial mode	{**0.35**}	AnSI (0), rtU (1), Lcd (2)		rtU (1)		RW	Txt			PT	US
11.25	Baud rate	{**0.36**}	300 (0), 600 (1), 1200 (2), 2400 (3), 4800 (4), 9600 (5), 19200 (6), 38400 (7), 57600 (8)*, 115200 (9)* *Modbus RTU only		19200 (6)		RW	Txt				US
11.26	Minimum comms transmit delay		0 to 250ms		2		RW	Uni				US
11.28	Drive derivative		0 to 16				RO	Uni		NC	PT	
11.29	Software version	{**0.50**}	1.00 to 99.99				RO	Uni		NC	PT	
11.30	User security code	{**0.34**}	0 to 999		0		RW	Uni		NC	PT	PS
11.31	User drive mode	{**0.48**}	OPEn LP (1), rfc (2),		OPEn LP (1)	rfc (2)	RW	Txt		NC	PT	
11.32	Drive current scaling	{**0.32**}	0.00 to 9999.99A				RO	Uni		NC	PT	
11.33	Drive voltage rating	{**0.31**}	200 (0), 400 (1), 575 (2), 690 (3)				RO	Txt		NC	PT	
11.34	Software sub-version		0 to 99				RO	Uni		NC	PT	
11.35	Number of modules		0 to 10		0		RW	Uni			PT	US
11.36	SMARTCARD parameter data previously loaded	{**0.29**}	0 to 999		0		RO	Uni		NC	PT	US
11.37	SMARTCARD data number		0 to 1003		0		RW	Uni		NC		
11.38	SMARTCARD data type / mode		0 to 18				RO	Txt		NC	PT	
11.39	SMARTCARD data version		0 to 9,999		0		RW	Uni		NC		
11.40	SMARTCARD data checksum		0 to 65,335				RO	Uni		NC	PT	
11.41	Status mode timeout		0 to 250s		240		RW	Uni				US
11.42	Parameter cloning	{**0.30**}	nonE (0), rEAd (1), Prog (2), AutO (3), boot (4)		nonE (0)		RW	Txt		NC		*
11.43	Load defaults		nonE (0), Eur (1), USA (2)		nonE (0)		RW	Txt		NC		
11.44	Security status	{**0.49**}	L1 (0), L2 (1), Loc (2)				RW	Txt			PT	US
11.45	Select motor 2 parameters		OFF (0) or On (1)		OFF (0)		RW	Bit				US
11.46	Defaults previously loaded		0 to 2000				RO	Uni		NC	PT	US
11.47	Drive Onboard PLC program enable		Halt program (0) Run program: out of range = clip (1) Run program: out of range = trip (2)		Run program: out of range = trip (2)		RW	Uni				US
11.48	Drive Onboard PLC program status		-128 to +127				RO	Bi		NC	PT	
11.49	Drive Onboard PLC programming events		0 to 65,535				RO	Uni		NC	PT	PS
11.50	Drive Onboard PLC program average scan time		0 to 65,535 ms				RO	Uni		NC	PT	
11.51	Drive Onboard PLC program first run		OFF (0) or On (1)				RO	Bit		NC	PT	

* Modes 1 and 2 are not user saved, Modes 0, 3 and 4 are user saved

RW	Read / Write	RO	Read only	Uni	Unipolar	Bi	Bi-polar	Bit	Bit parameter	Txt	Text string			
FI	Filtered	DE	Destination	NC	Not cloned	RA	Rating dependent	PT	Protected	US	User save	PS	Power down save	

12.12 Menu 12: Threshold detectors, variable selectors and brake control function

Figure 12-15 Menu 12 logic diagram

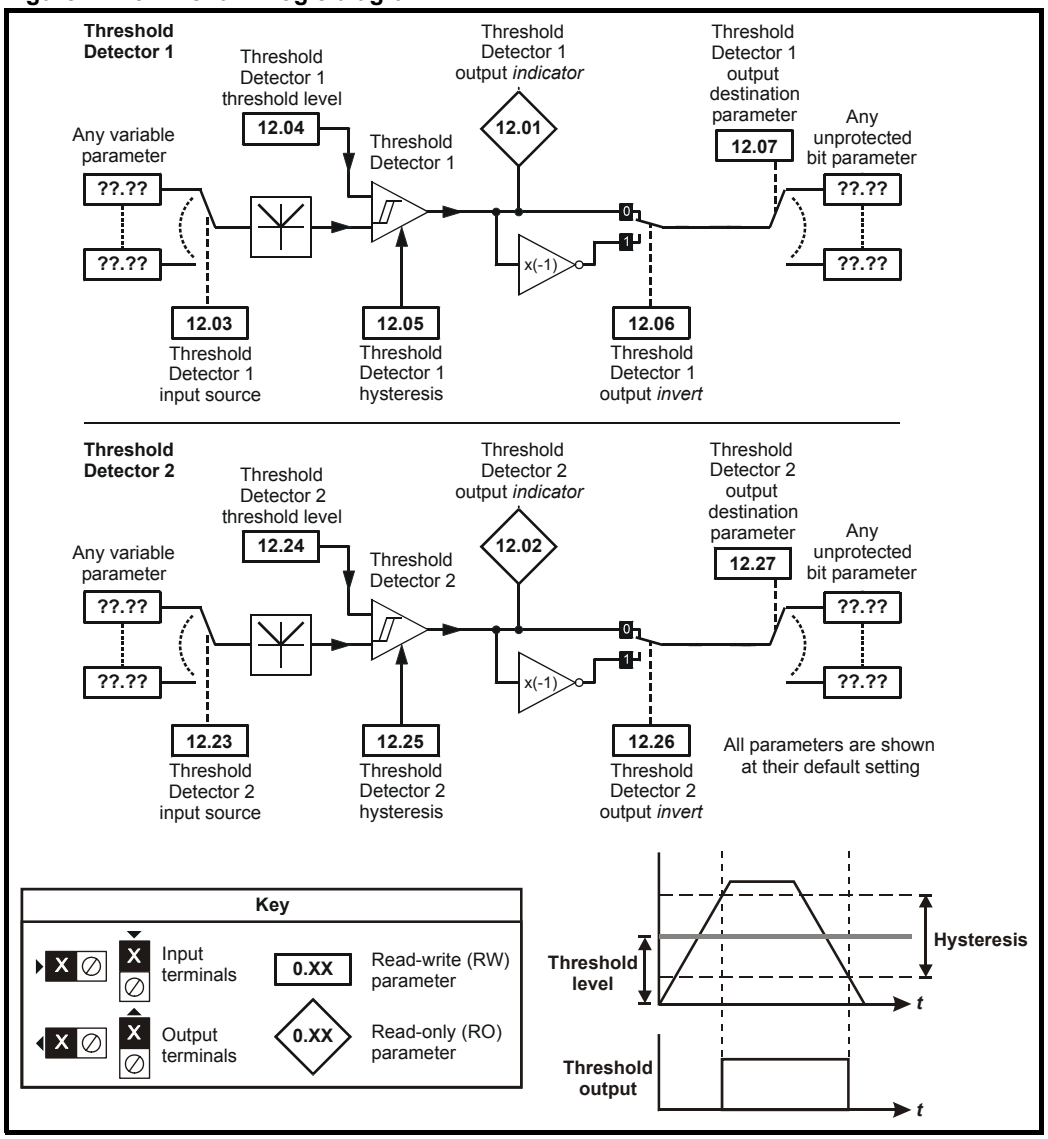

Figure 12-16 Menu 12 logic diagram (continued)

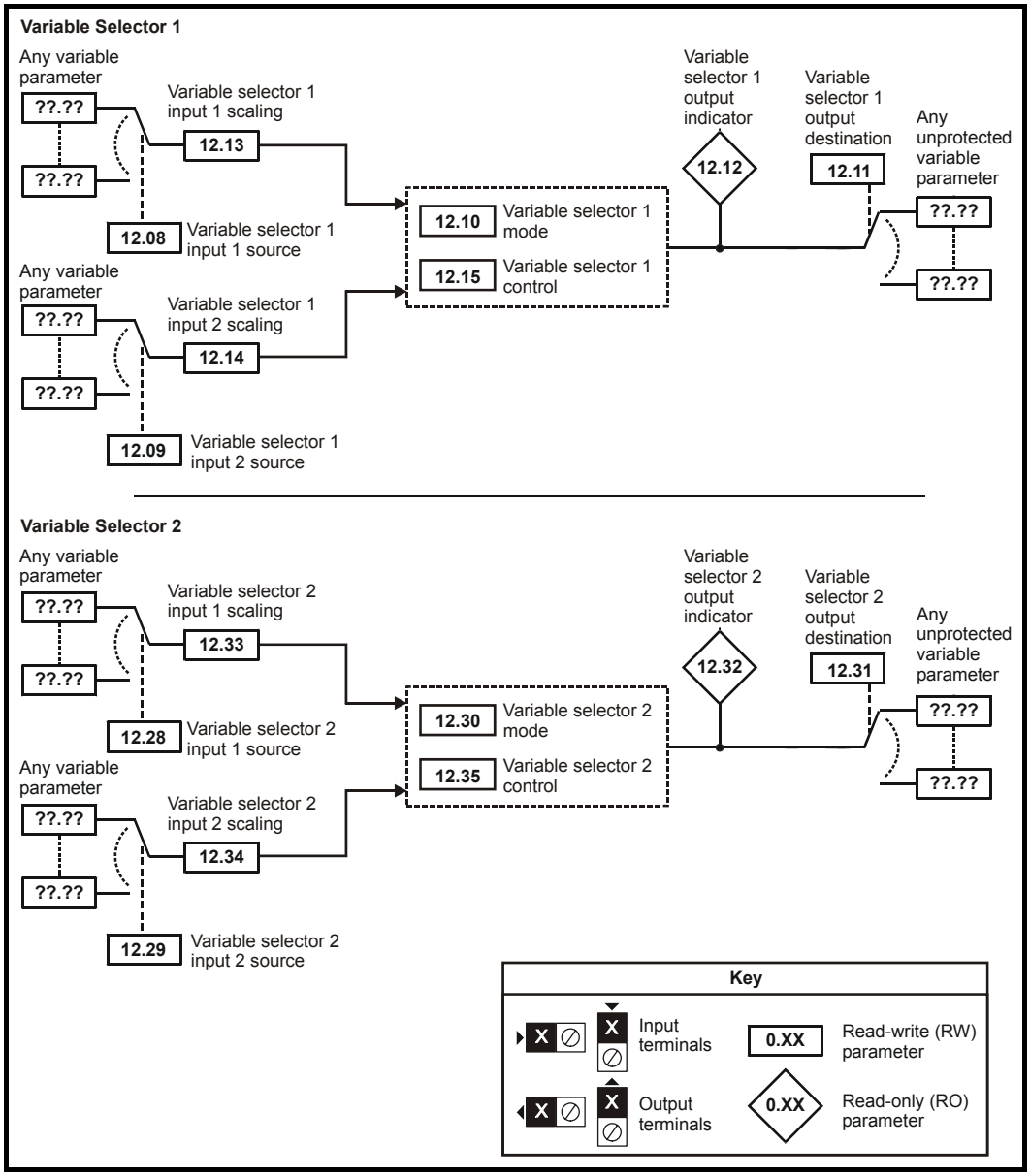

WARNING

The control terminal relay can be selected as an output to release a brake. If a drive is set up in this manner and a drive replacement takes place, prior to programming the drive on initial power up, the brake may be released.
When drive terminals are programmed to non default settings the result of incorrect or delayed programming must be considered. The use of a Smartcard in boot mode can ensure drive parameters are immediately programmed to avoid this situation.

Figure 12-17 Open-loop brake function

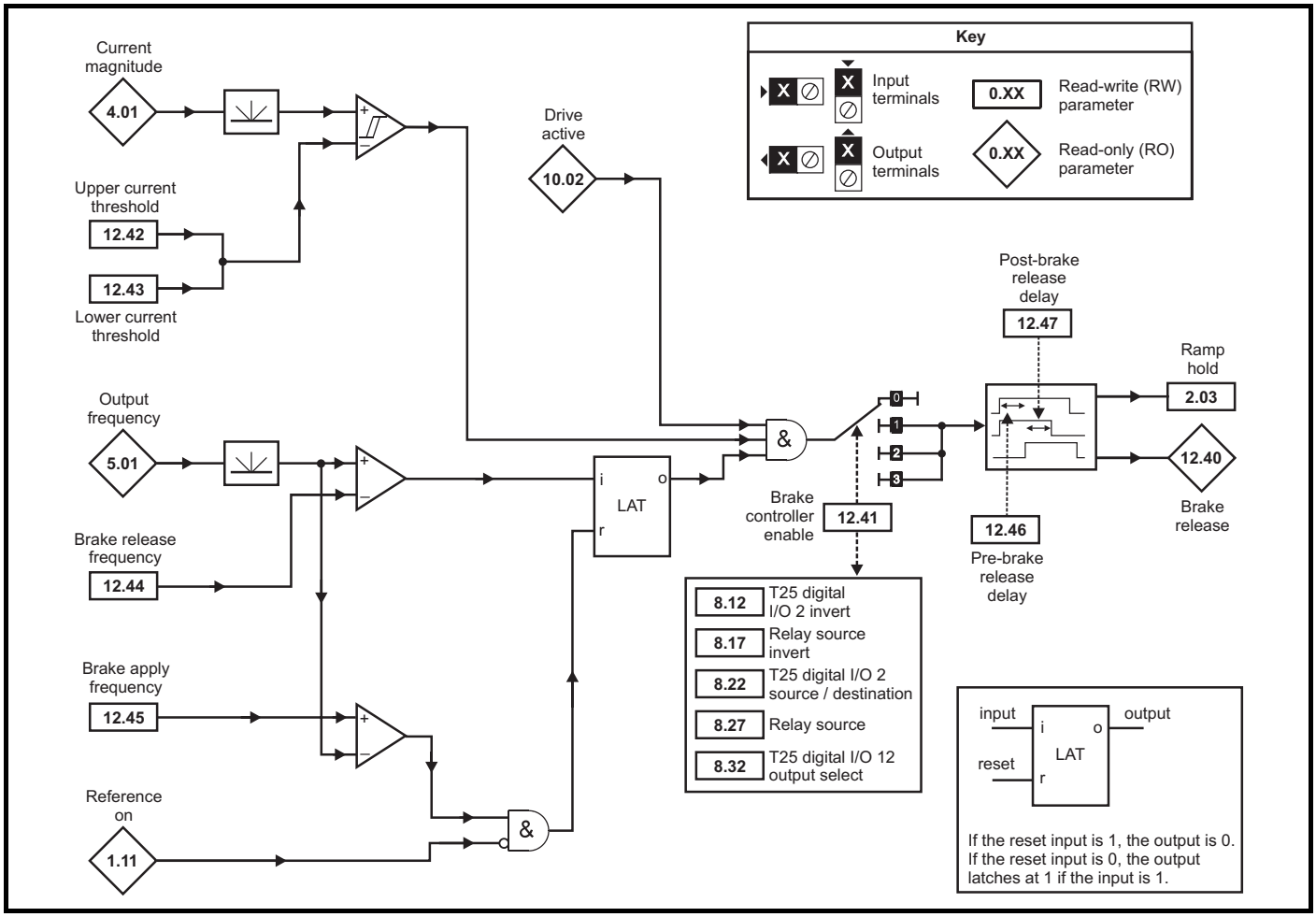

Figure 12-18 Open-loop brake sequence

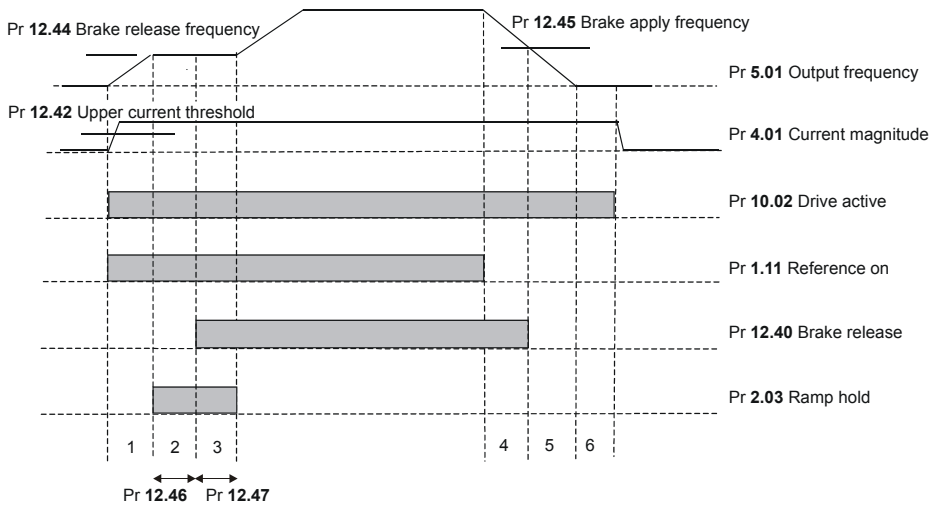

1. Wait for upper current threshold and brake release frequency
2. Pre-brake release delay
3. Post-brake release delay
4. Wait for brake apply frequency
5. Wait for zero frequency
6. 1s delay as phase 2 of stopping sequence (Pr **6.01**=1,2 or 3)

WARNING

The control terminal relay can be selected as an output to release a brake. If a drive is set up in this manner and a drive replacement takes place, prior to programming the drive on initial power up, the brake may be released.
When drive terminals are programmed to non default settings the result of incorrect or delayed programming must be considered. The use of a Smartcard in boot mode can ensure drive parameters are immediately programmed to avoid this situation.

Figure 12-19 RFC brake function

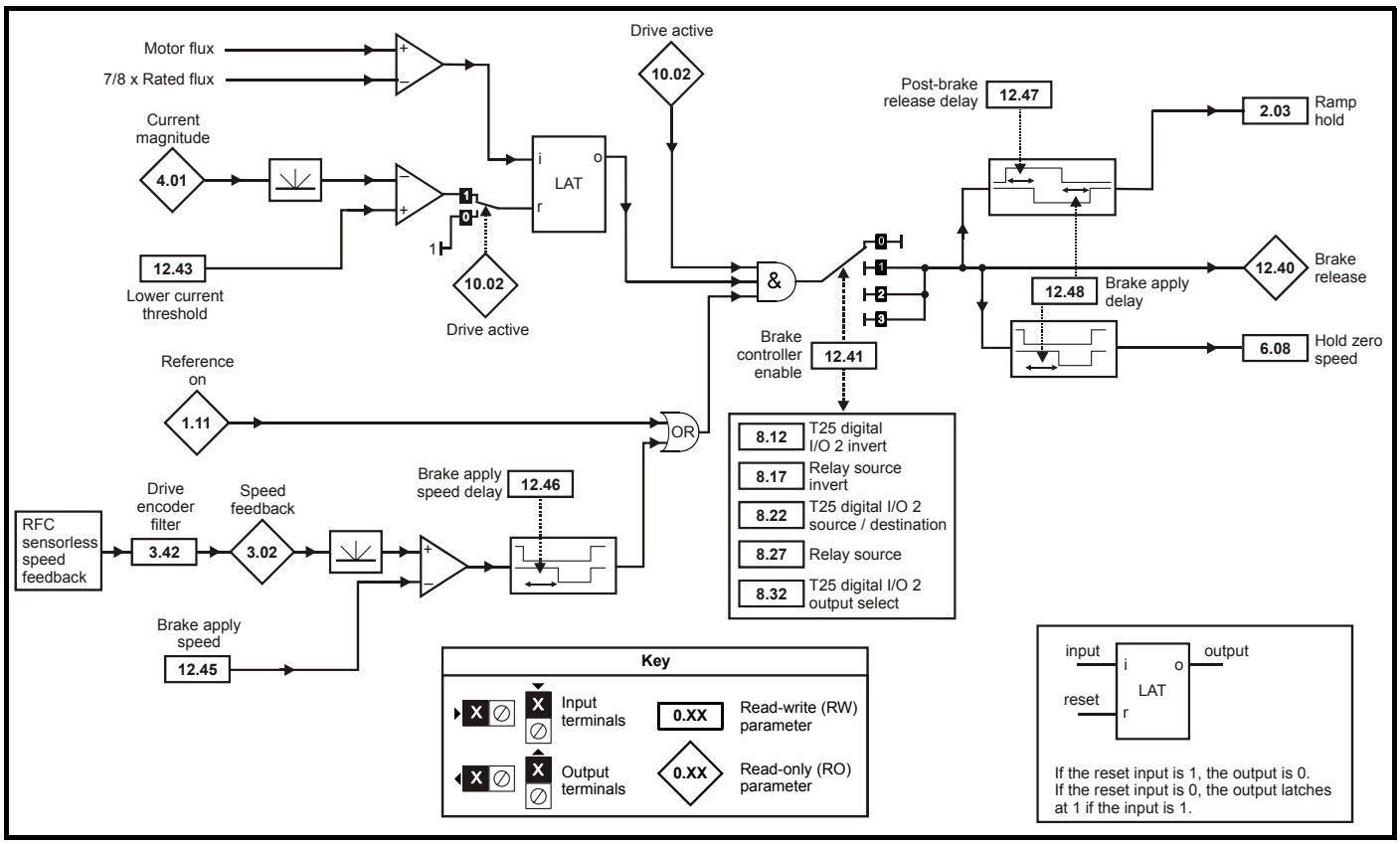

Figure 12-20 RFC brake sequence

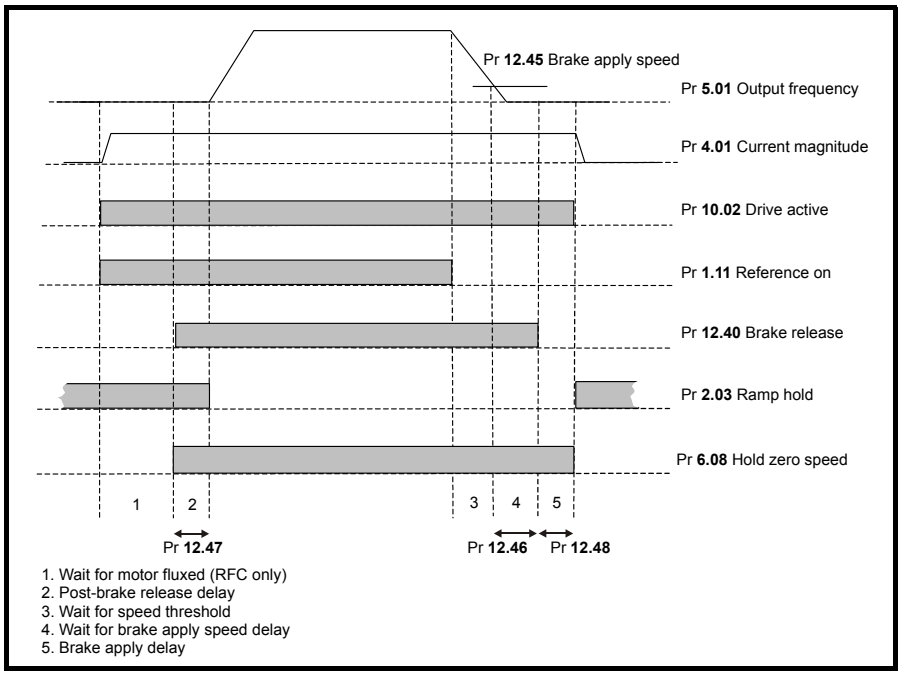

WARNING

The control terminal relay can be selected as an output to release a brake. If a drive is set up in this manner and a drive replacement takes place, prior to programming the drive on initial power up, the brake may be released.
When drive terminals are programmed to non default settings the result of incorrect or delayed programming must be considered. The use of a Smartcard in boot mode can ensure drive parameters are immediately programmed to avoid this situation.

Parameter		Range(⇳)		Default(⇨)		Type					
		OL	RFC	OL	RFC						
12.01	Threshold detector 1 output	OFF (0) or On (1)				RO	Bit		NC	PT	
12.02	Threshold detector 2 output	OFF (0) or On (1)				RO	Bit		NC	PT	
12.03	Threshold detector 1 source	Pr **0.00** to Pr **50.99**		Pr **0.00**		RW	Uni			PT	US
12.04	Threshold detector 1 level	0.00 to 100.00 %		0.00		RW	Uni				US
12.05	Threshold detector 1 hysteresis	0.00 to 25.00 %		0.00		RW	Uni				US
12.06	Threshold detector 1 output invert	OFF (0) or On (1)		OFF (0)		RW	Bit				US
12.07	Threshold detector 1 destination	Pr **0.00** to Pr **50.99**		Pr **0.00**		RW	Uni	DE		PT	US
12.08	Variable selector 1 source 1	Pr **0.00** to Pr **50.99**		Pr **0.00**		RW	Uni			PT	US
12.09	Variable selector 1 source 2	Pr **0.00** to Pr **50.99**		Pr **0.00**		RW	Uni			PT	US
12.10	Variable selector 1 mode	Select input 1 (0), select input 2 (1), add (2), subtract (3), multiply (4), divide (5), time constant (6), linear ramp (7), modulus (8), powers (9), sectional control (10), external rectifier monitor (11)		Select input 1 (0)		RW	Uni				US
12.11	Variable selector 1 destination	Pr **0.00** to Pr **50.99**		Pr **0.00**		RW	Uni	DE		PT	US
12.12	Variable selector 1 output	±100.00 %				RO	Bi		NC	PT	
12.13	Variable selector 1 source 1 scaling	±4.000		1.000		RW	Bi				US
12.14	Variable selector 1 source 2 scaling	±4.000		1.000		RW	Bi				US
12.15	Variable selector 1 control	0.00 to 100.00 s		0.00		RW	Uni				US
12.23	Threshold detector 2 source	Pr **0.00** to Pr **50.99**		Pr **0.00**		RW	Uni			PT	US
12.24	Threshold detector 2 level	0.00 to 100.00 %		0.00		RW	Uni				US
12.25	Threshold detector 2 hysteresis	0.00 to 25.00 %		0.00		RW	Uni				US
12.26	Threshold detector 2 output invert	OFF (0) or On (1)		OFF (0)		RW	Bit				US
12.27	Threshold detector 2 destination	Pr **0.00** to Pr **50.99**		Pr **0.00**		RW	Uni	DE		PT	US
12.28	Variable selector 2 source 1	Pr **0.00** to Pr **50.99**		Pr **0.00**		RW	Uni			PT	US
12.29	Variable selector 2 source 2	Pr **0.00** to Pr **50.99**		Pr **0.00**		RW	Uni			PT	US
12.30	Variable selector 2 mode	Select input 1 (0), select input 2 (1), add (2), subtract (3), multiply (4), divide (5), time constant (6), linear ramp (7), modulus (8), powers (9), sectional control (10), external rectifier monitor (11)		Select input 1 (0)		RW	Uni				US
12.31	Variable selector 2 destination	Pr **0.00** to Pr **50.99**		Pr **0.00**		RW	Uni	DE		PT	US
12.32	Variable selector 2 output	±100.00 %				RO	Bi		NC	PT	
12.33	Variable selector 2 source 1 scaling	±4.000		1.000		RW	Bi				US
12.34	Variable selector 2 source 2 scaling	±4.000		1.000		RW	Bi				US
12.35	Variable selector 2 control	0.00 to 100.00 s		0.00		RW	Uni				US
12.40	Brake release indicator	OFF (0) or On (1)				RO	Bit		NC	PT	
12.41	Brake controller enable	dis (0), rEL (1), d IO (2), USEr (3)		dis (0)		RW	Txt				US
12.42	Upper current threshold	0 to 200 %		50		RW	Uni				US
12.43	Lower current threshold	0 to 200 %		10		RW	Uni				US
12.44	Brake release frequency	0.0 to 20.0 Hz		1.0		RW	Uni				US
12.45	Brake apply frequency / speed	0.0 to 20.0 Hz	0 to 200 rpm	2.0	5	RW	Bit				US
12.46	OL> Pre-brake release delay	0.0 to 25.0 s		1.0		RW	Uni				US
	RFC> Brake apply speed delay				1.0						
12.47	Post brake release delay	0.0 to 25.0 s		1.0		RW	Uni				US
12.48	Brake apply delay		0.0 to 25.0 s		1.0	RW	Uni				US

RW	Read / Write	RO	Read only	Uni	Unipolar	Bi	Bi-polar	Bit	Bit parameter	Txt	Text string		
FI	Filtered	DE	Destination	NC	Not cloned	RA	Rating dependent	PT	Protected	US	User save	PS	Power down save

12.13 Menu 14: User PID controller

Figure 12-21 Menu 14 Logic diagram - Independant controllers

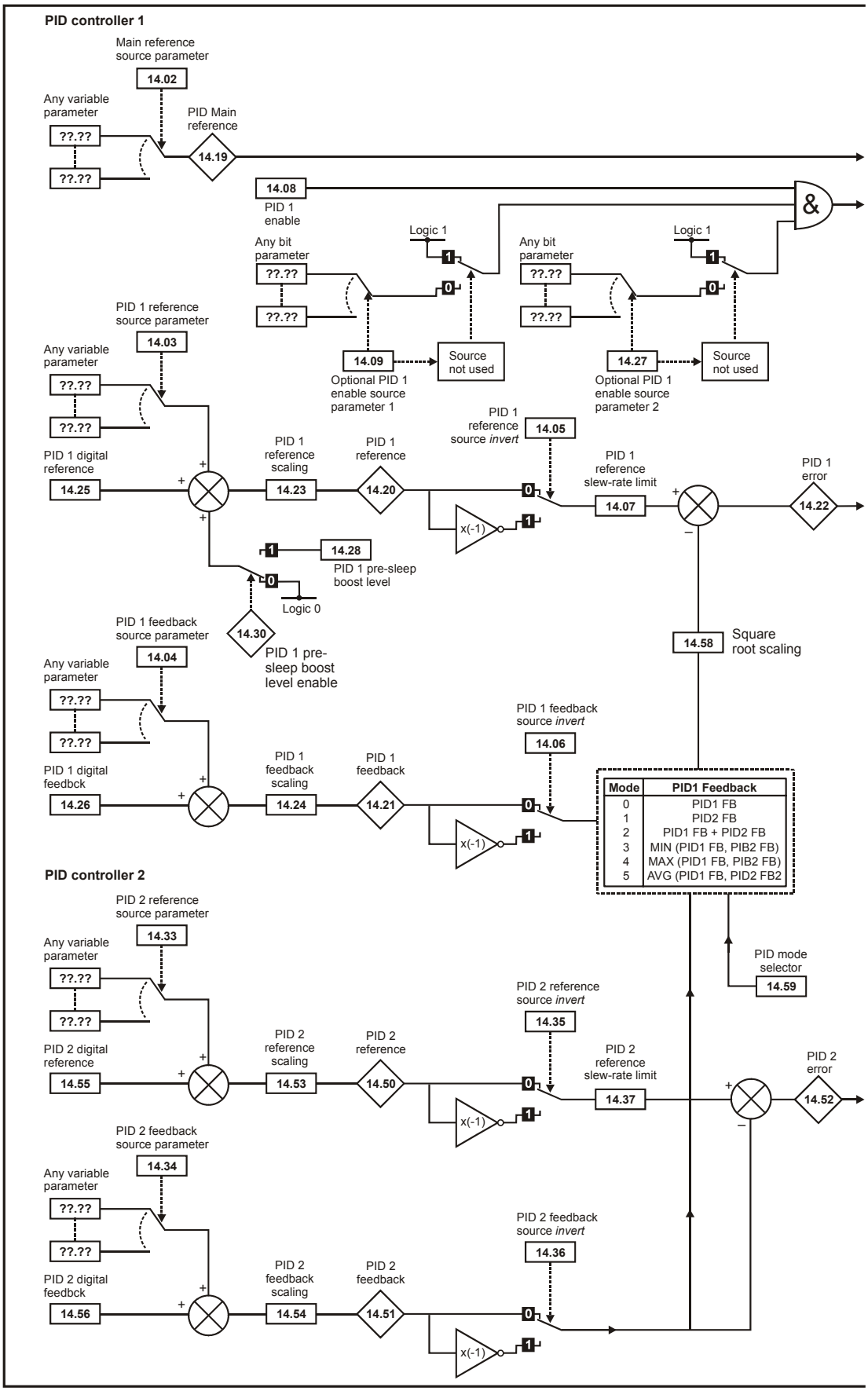

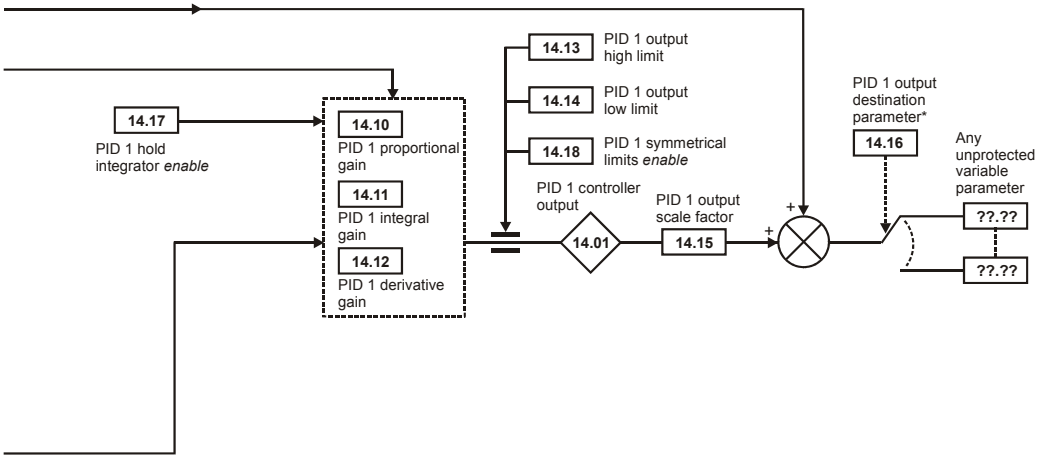

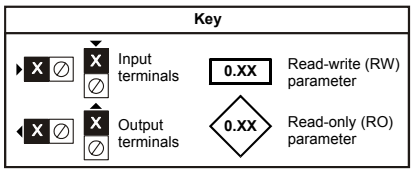

The parameters are all shown at their default settings

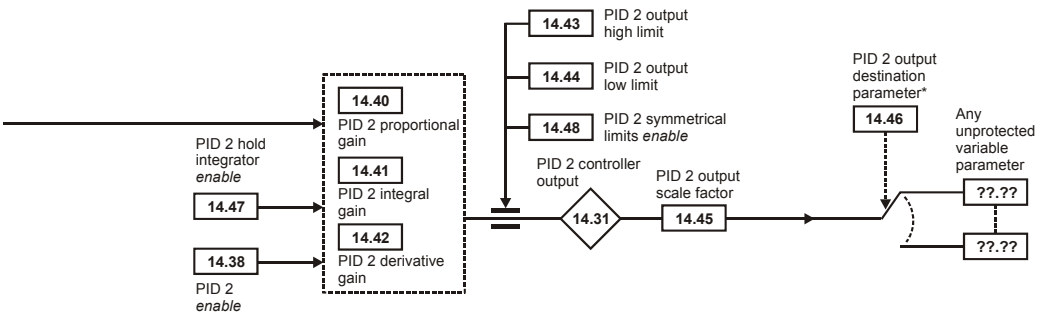

Figure 12-22 Menu 14 Logic diagram - Combined control

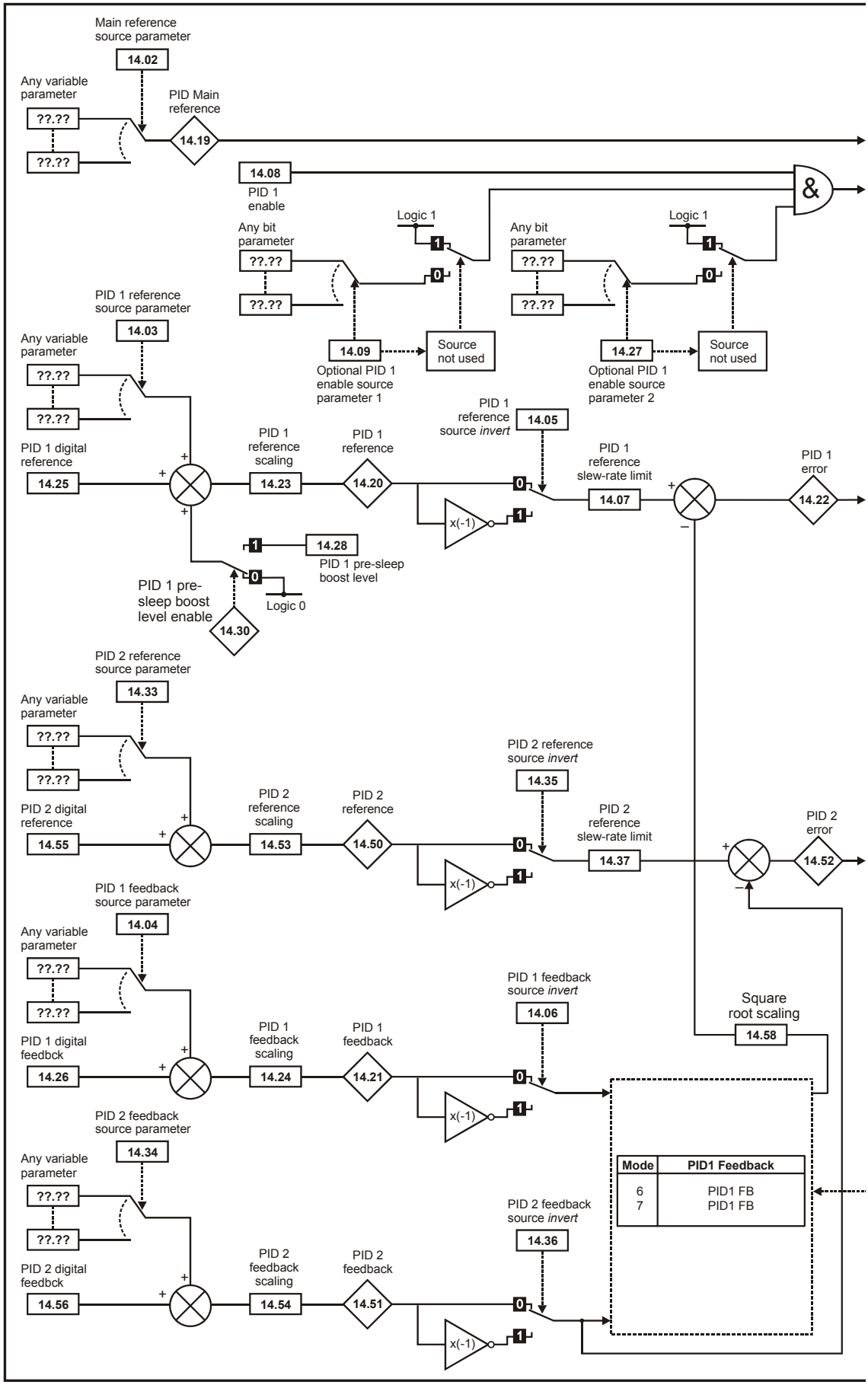

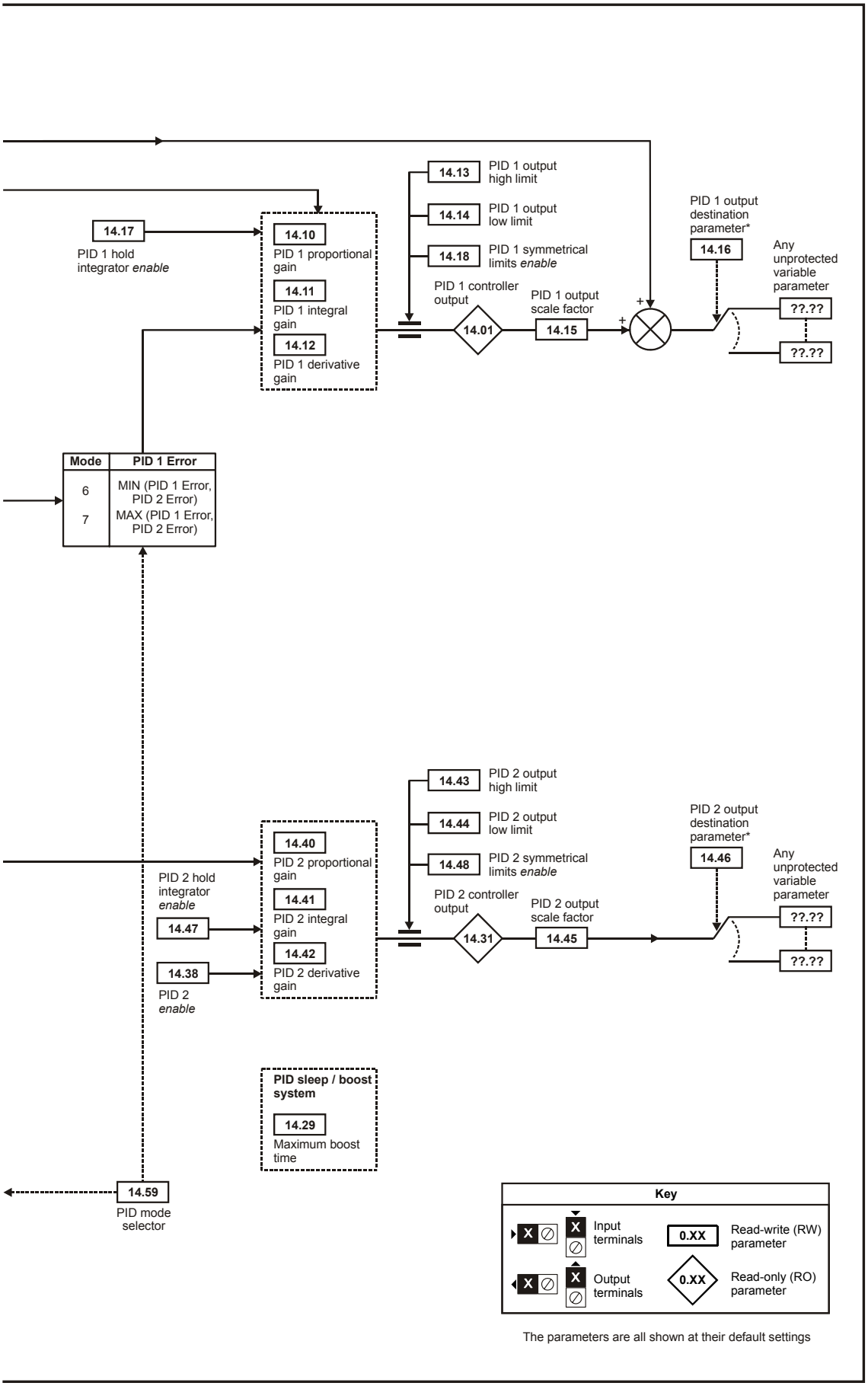

The parameters are all shown at their default settings

Parameter		Range(⇳)		Default(⇨)		Type					
		OL	RFC	OL	RFC						
14.01	PID 1 control output	±100.00 %				RO	Bi		NC	PT	
14.02	PID 1 main reference source	Pr **0.00** to **50.99**		Pr **0.00**		RW	Uni			PT	US
14.03	PID 1 reference source	Pr **0.00** to **50.99**		Pr **0.00**		RW	Uni			PT	US
14.04	PID 1 feedback source	Pr **0.00** to **50.99**		Pr **0.00**		RW	Uni			PT	US
14.05	PID 1 reference invert	OFF (0) or On (1)		OFF (0)		RW	Bit				US
14.06	PID 1 feedback invert	OFF (0) or On (1)		OFF (0)		RW	Bit				US
14.07	PID 1 reference slew-rate limit	0.0 to 3,200.0 s		0.0		RW	Uni				US
14.08	PID 1 enable	OFF (0) or On (1)		OFF (0)		RW	Bit				US
14.09	PID 1 optional enable source	Pr **0.00** to **50.99**		Pr **10.01**		RW	Uni			PT	US
14.10	PID 1 proportional gain	0.000 to 4.000		1.000		RW	Uni				US
14.11	PID 1 integral gain	0.000 to 4.000		0.500		RW	Uni				US
14.12	PID 1 derivative gain	0.000 to 4.000		0.000		RW	Uni				US
14.13	PID 1 output upper limit	0.00 to 100.00 %		100.00		RW	Uni				US
14.14	PID 1 output lower limit	±100.00 %		-100.00		RW	Bi				US
14.15	PID 1 output scaling	0.000 to 4.000		1.000		RW	Uni				US
14.16	PID 1 output destination	Pr **0.00** to **50.99**		Pr **0.00**		RW	Uni	DE		PT	US
14.17	PID 1 hold integrator enable	OFF (0) or On (1)		OFF (0)		RW	Bit		NC		US
14.18	PID 1 symmetrical limit enable	OFF (0) or On (1)		OFF (0)		RW	Bit				US
14.19	PID 1 main reference	±100.00 %				RO	Bi		NC	PT	
14.20	PID 1 reference	±100.00 %				RO	Bi		NC	PT	
14.21	PID 1 feedback	±100.00 %				RO	Bi		NC	PT	
14.22	PID 1 error	±100.00 %				RO	Bi		NC	PT	
14.23	PID 1 reference scaling	0.000 to 4.000		1.000		RW	Uni				US
14.24	PID 1 feedback scaling	0.000 to 4.000		1.000		RW	Uni				US
14.25	PID 1 digital reference	±100.00 %		0.00		RW	Bi		NC		
14.26	PID 1 digital feedback	±100.00 %		0.00		RW	Bi		NC		
14.27	PID 1 optional enable source parameter 2	0.00 to 50.99		0.00		RW	Uni			PT	US
14.28	PID 1 pre-sleep boost level	0.00 to 100.00 %		0.00		RW	Uni				US
14.29	Maximum boost time	0.0 to 250.0 s		0.0		RW	Uni				US
14.30	PID 1 pre-sleep boost level enable	OFF (0) or On (1)		OFF (0)		RO	Bit		NC	PT	US
14.31	PID 2 output	±100.00 %				RO	Bi		NC	PT	
14.33	PID 2 reference source	Pr **0.00** to **50.99**		Pr **0.00**		RW	Uni			PT	US
14.34	PID 2 feedback source	Pr **0.00** to **50.99**		Pr **0.00**		RW	Uni			PT	US
14.35	PID 2 reference invert	OFF (0) or On (1)		OFF (0)		RW	Bit				US
14.36	PID 2 feedback invert	OFF (0) or On (1)		OFF (0)		RW	Bit				US
14.37	PID 2 reference slew-rate limit	0.0 to 3,200.0 s		0.0		RW	Uni				US
14.38	PID 2 enable	0 to 2		0		RW	Uni				US
14.40	PID 2 proportional gain	0.000 to 4.000		1.000		RW	Uni				US
14.41	PID 2 integral gain	0.000 to 4.000		0.500		RW	Uni				US
14.42	PID 2 derivative gain	0.000 to 4.000		0.000		RW	Uni				US
14.43	PID 2 output upper limit	0.00 to 100.00 %		100.00		RW	Uni				US
14.44	PID 2 output lower limit	±100.00 %		-100.00		RW	Bi				US
14.45	PID 2 output scaling	0.000 to 4.000		1.000		RW	Uni				US
14.46	PID 2 output destination	Pr **0.00** to **50.99**		Pr **0.00**		RW	Uni	DE		PT	US
14.47	PID 2 hold integrator enable	OFF (0) or On (1)		OFF (0)		RW	Bit		NC		US
14.48	PID 2 symmetrical limit enable	OFF (0) or On (1)		OFF (0)		RW	Bit				US
14.50	PID 2 reference	±100.00 %				RO	Bi		NC	PT	
14.51	PID 2 feedback	±100.00 %				RO	Bi		NC	PT	
14.52	PID 2 error	±100.00 %				RO	Bi		NC	PT	
14.53	PID 2 reference scaling	0.000 to 4.000		1.000		RW	Uni				US
14.54	PID 2 feedback scaling	0.000 to 4.000		1.000		RW	Uni				US
14.55	PID 2 digital reference	±100.00 %		0.00		RW	Bi		NC		
14.56	PID 2 digital feedback	±100.00 %		0.00		RW	Bi		NC		
14.58	Square root scaling	0.00 to 4.000		0.000		RW	Uni				US
14.59	PID mode selector	0 to 7		0		RW	Uni				US

RW	Read / Write	RO	Read only	Uni	Unipolar	Bi	Bi-polar	Bit	Bit parameter	Txt	Text string		
FI	Filtered	DE	Destination	NC	Not cloned	RA	Rating dependent	PT	Protected	US	User save	PS	Power down save

12.14 Menus 15 and 16: Solutions Module set-up

Figure 12-23 Location of Solutions Module slots and their corresponding menu numbers

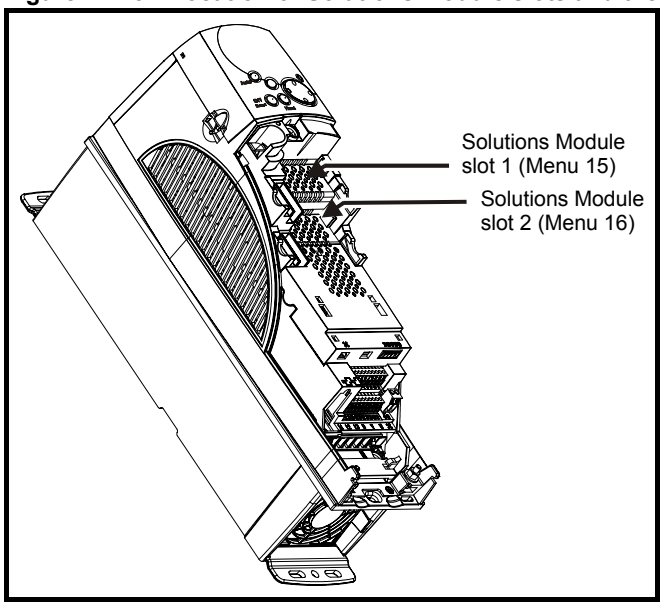

12.14.1 Parameters common to all categories

Parameter		Range(⇳)	Default(⇨)	Type					
x.01	Solutions Module ID	0 to 599		RO	Uni			PT	US
x.02	Solutions Module software version	0.00 to 99.99		RO	Uni		NC	PT	
x.50	Solutions Module error status	0 to 255		RO	Uni		NC	PT	
x.51	Solutions Module software sub-version	0 to 99		RO	Uni		NC	PT	

The Solutions Module ID indicates the type of module that is installed in the corresponding slot.

Solutions Module ID	Module	Category
0	No module installed	
201	SM-I/O Plus	Automation (I/O Expansion)
204	SM-I/O PELV	
205	SM-I/O 24V Protected	
206	SM-I/O 120V	
207	SM-I/O Lite	
401	SM-LON	Fieldbus
403	SM-PROFIBUS-DP	
404	SM-INTERBUS	
407	SM-DeviceNet	
410	SM-Ethernet	

Solutions Module software

Most Solutions Modules contain software. The software version of the module can be checked by looking at Pr **x.02** and Pr **x.51**.

The software version takes the form of zz.yy.xx, where Pr **x.02** displays zz.yy and Pr **x.51** displays xx. I.e. for software version 01.01.00, Pr **x.02** would display 1.01 and Pr **x.51** would display 0

SM-I/O Plus modules do not contain any software, so Pr **x.02** and Pr **x.51** do not appear.

For further information, refer to the specific Solutions Module User Guide.

12.14.2 Automation module category

Figure 12-24 SM-I/O Plus analog logic diagram

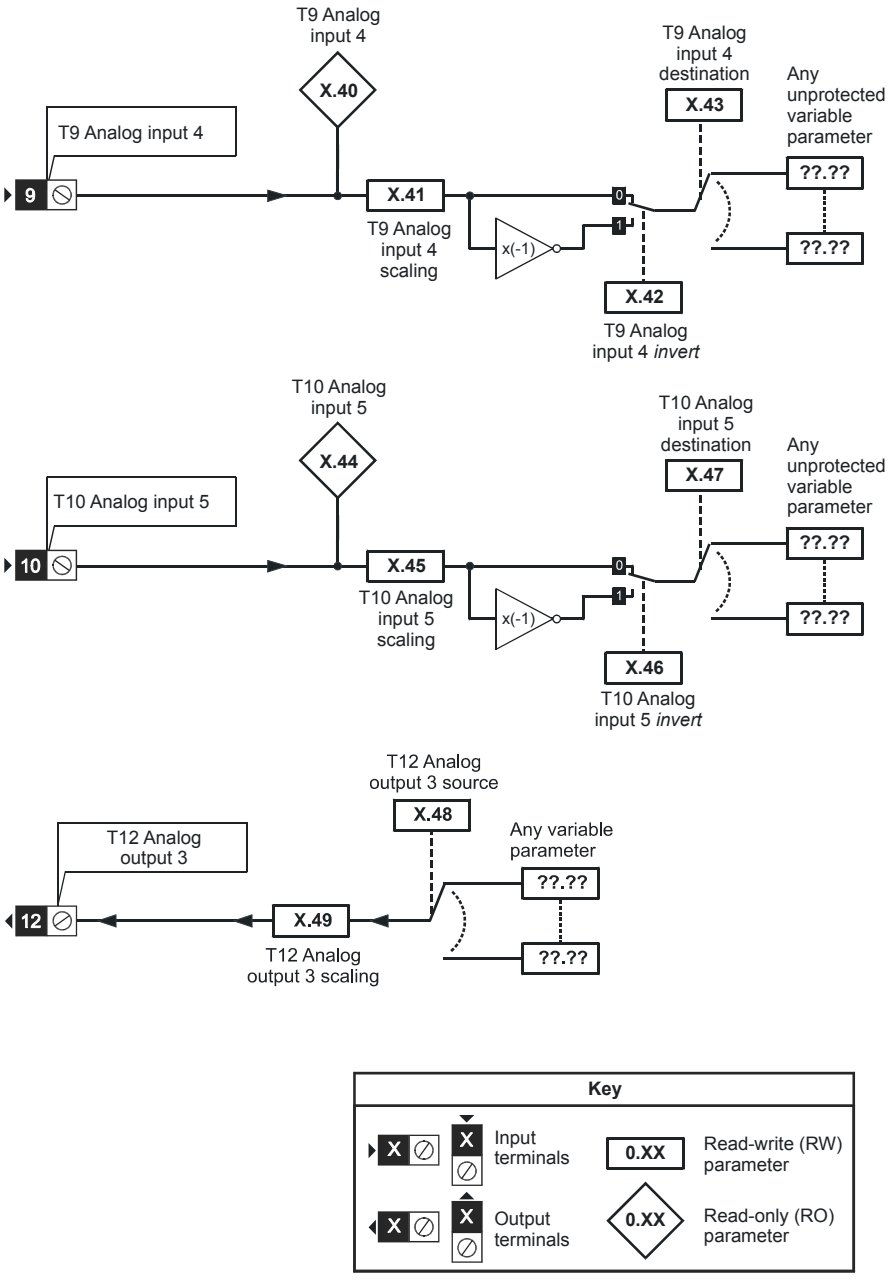

The parameters are all shown at their default settings

Figure 12-25 SM-I/O Plus digital logic diagram 1

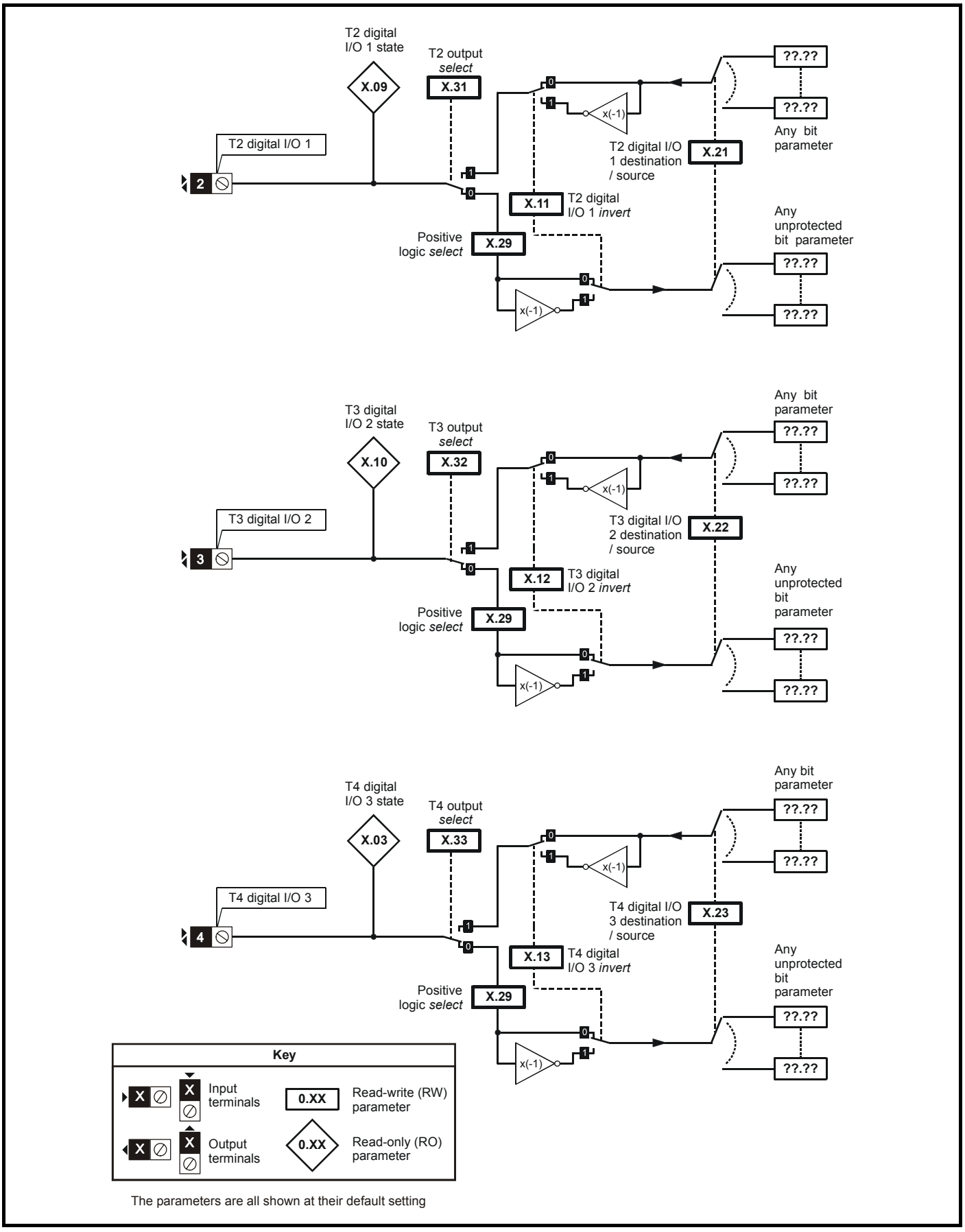

The parameters are all shown at their default setting

Figure 12-26 SM-I/O Plus digital logic diagram 2

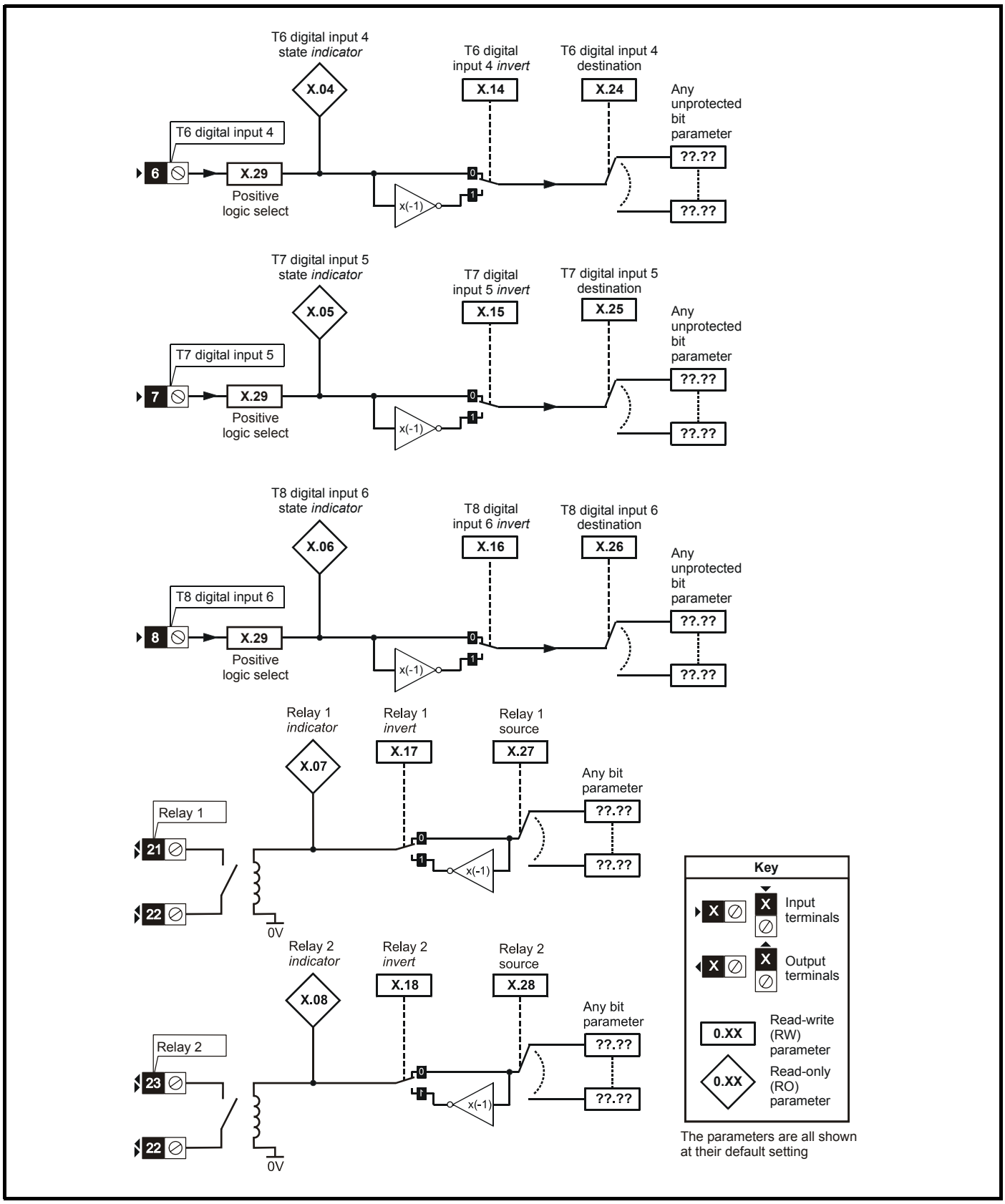

SM-I/O Plus parameters

Parameter		Range(⇳)	Default(⇨)	Type					
x.01	Solutions Module ID	0 to 599	201	RO	Uni			PT	US
x.03	T4 digital I/O 3 state	OFF (0) or On (1)		RO	Bit		NC	PT	
x.04	T6 digital input 4 state	OFF (0) or On (1)		RO	Bit		NC	PT	
x.05	T7 digital input 5 state	OFF (0) or On (1)		RO	Bit		NC	PT	
x.06	T8 digital input 6 state	OFF (0) or On (1)		RO	Bit		NC	PT	
x.07	Relay 1 state	OFF (0) or On (1)		RO	Bit		NC	PT	
x.08	Relay 2 state	OFF (0) or On (1)		RO	Bit		NC	PT	
x.09	T2 digital I/O 1 state	OFF (0) or On (1)		RO	Bit		NC	PT	
x.10	T3 digital I/O 2 state	OFF (0) or On (1)		RO	Bit		NC	PT	
x.11	T2 digital I/O 1 invert	OFF (0) or On (1)	OFF (0)	RW	Bit				US
x.12	T3 digital I/O 2 invert	OFF (0) or On (1)	OFF (0)	RW	Bit				US
x.13	T4 digital I/O 3 invert	OFF (0) or On (1)	OFF (0)	RW	Bit				US
x.14	T6 digital input 4 invert	OFF (0) or On (1)	OFF (0)	RW	Bit				US
x.15	T7 digital input 5 invert	OFF (0) or On (1)	OFF (0)	RW	Bit				US
x.16	T8 digital input 6 invert	OFF (0) or On (1)	OFF (0)	RW	Bit				US
x.17	Relay 1 invert	OFF (0) or On (1)	OFF (0)	RW	Bit				US
x.18	Relay 2 invert	OFF (0) or On (1)	OFF (0)	RW	Bit				US
x.20	Digital I/O read word	0 to 511		RO	Uni		NC	PT	
x.21	T2 digital I/O 1 source/ destination	Pr **0.00** to Pr **50.99**	Pr **0.00**	RW	Uni	DE		PT	US
x.22	T3 digital I/O 2 source/ destination	Pr **0.00** to Pr **50.99**	Pr **0.00**	RW	Uni	DE		PT	US
x.23	T4 digital I/O 3 source/ destination	Pr **0.00** to Pr **50.99**	Pr **0.00**	RW	Uni	DE		PT	US
x.24	T6 digital input 4 destination	Pr **0.00** to Pr **50.99**	Pr **0.00**	RW	Uni	DE		PT	US
x.25	T7 digital input 5 destination	Pr **0.00** to Pr **50.99**	Pr **0.00**	RW	Uni	DE		PT	US
x.26	T8 digital input 6 destination	Pr **0.00** to Pr **50.99**	Pr **0.00**	RW	Uni	DE		PT	US
x.27	Relay 1 source	Pr **0.00** to Pr **50.99**	Pr **0.00**	RW	Uni			PT	US
x.28	Relay 2 source	Pr **0.00** to Pr **50.99**	Pr **0.00**	RW	Uni			PT	US
x.29	Input polarity select	OFF (0) or On (1)	On (1) (positive logic)	RW	Bit			PT	US
x.31	T2 digital I/O 1 output select	OFF (0) or On (1)	OFF (0)	RW	Bit				US
x.32	T3 digital I/O 2 output select	OFF (0) or On (1)	OFF (0)	RW	Bit				US
x.33	T4 digital I/O 3 output select	OFF (0) or On (1)	OFF (0)	RW	Bit				US
x.40	Analog input 1	±100.0%		RO	Bi		NC	PT	
x.41	Analog input 1 scaling	0 to 4.000	1.000	RW	Uni				US
x.42	Analog input 1 invert	OFF (0) or On (1)	OFF (0)	RW	Bit				US
x.43	Analog input 1 destination	Pr **0.00** to Pr **50.99**	Pr **0.00**	RW	Uni	DE		PT	US
x.44	Analog input 2	±100.0%		RO	Bi		NC	PT	
x.45	Analog input 2 scaling	0.000 to 4.000	1.000	RW	Uni				US
x.46	Analog input 2 invert	OFF (0) or On (1)	OFF (0)	RW	Bit				US
x.47	Analog input 2 destination	Pr **0.00** to Pr **50.99**	Pr **0.00**	RW	Uni	DE		PT	US
x.48	Analog output 1 source	Pr **0.00** to Pr **50.99**	Pr **0.00**	RW	Uni			PT	US
x.49	Analog output 1 scaling	0.000 to 4.000	1.000	RW	Uni				US
x.50	Solutions Module error status*	0 to 255		RO	Uni		NC	PT	

RW	Read / Write	RO	Read only	Uni	Unipolar	Bi	Bi-polar	Bit	Bit parameter	Txt	Text string		
FI	Filtered	DE	Destination	NC	Not cloned	RA	Rating dependent	PT	Protected	US	User save	PS	Power down save

*See trip SLX.Er, *Automation (I/O Expansion) module category* on page 242.

Figure 12-27 SM-I/O Lite digital I/O logic diagram

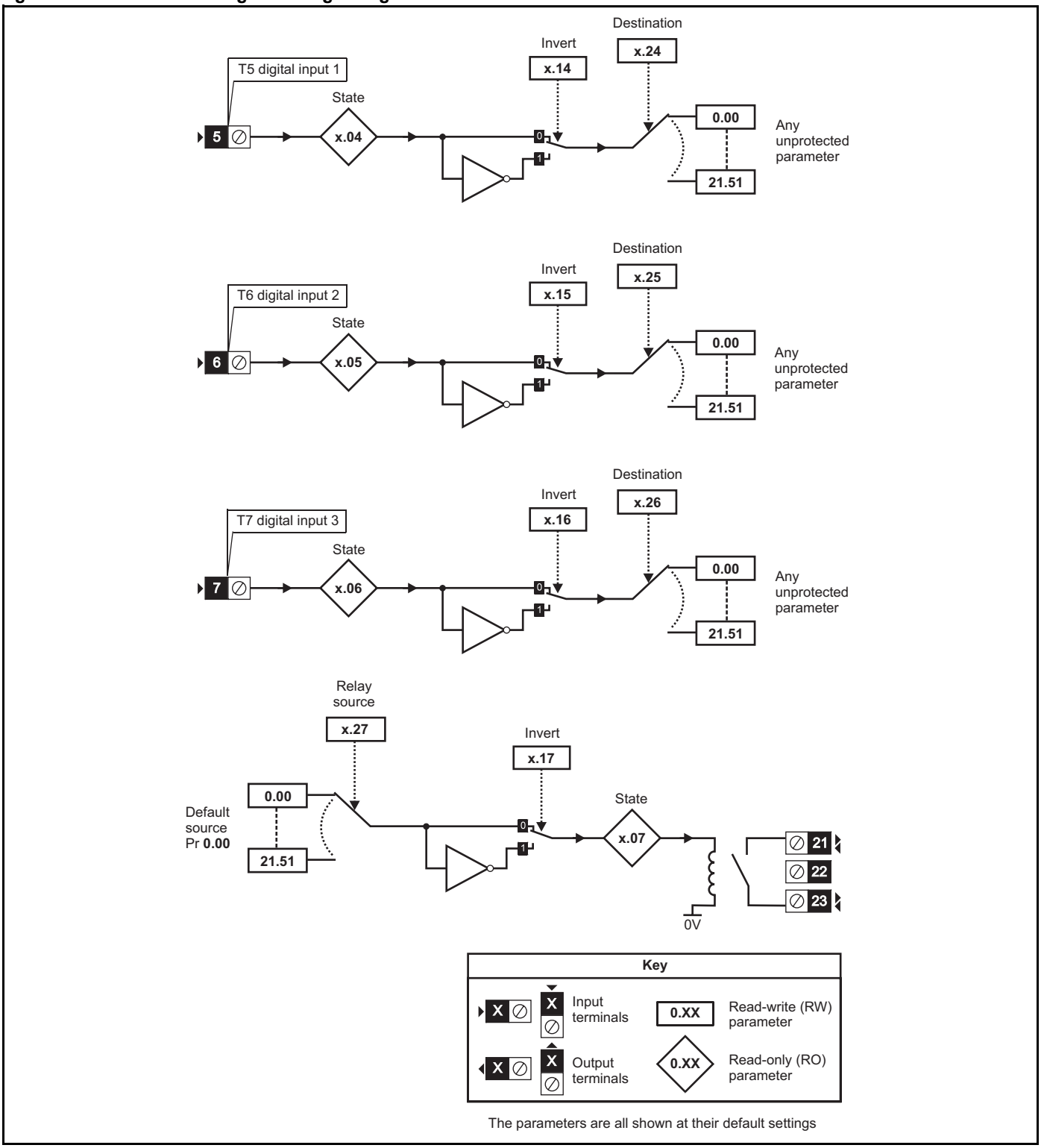

The parameters are all shown at their default settings

Figure 12-28 SM-I/O Lite analog I/O logic diagram

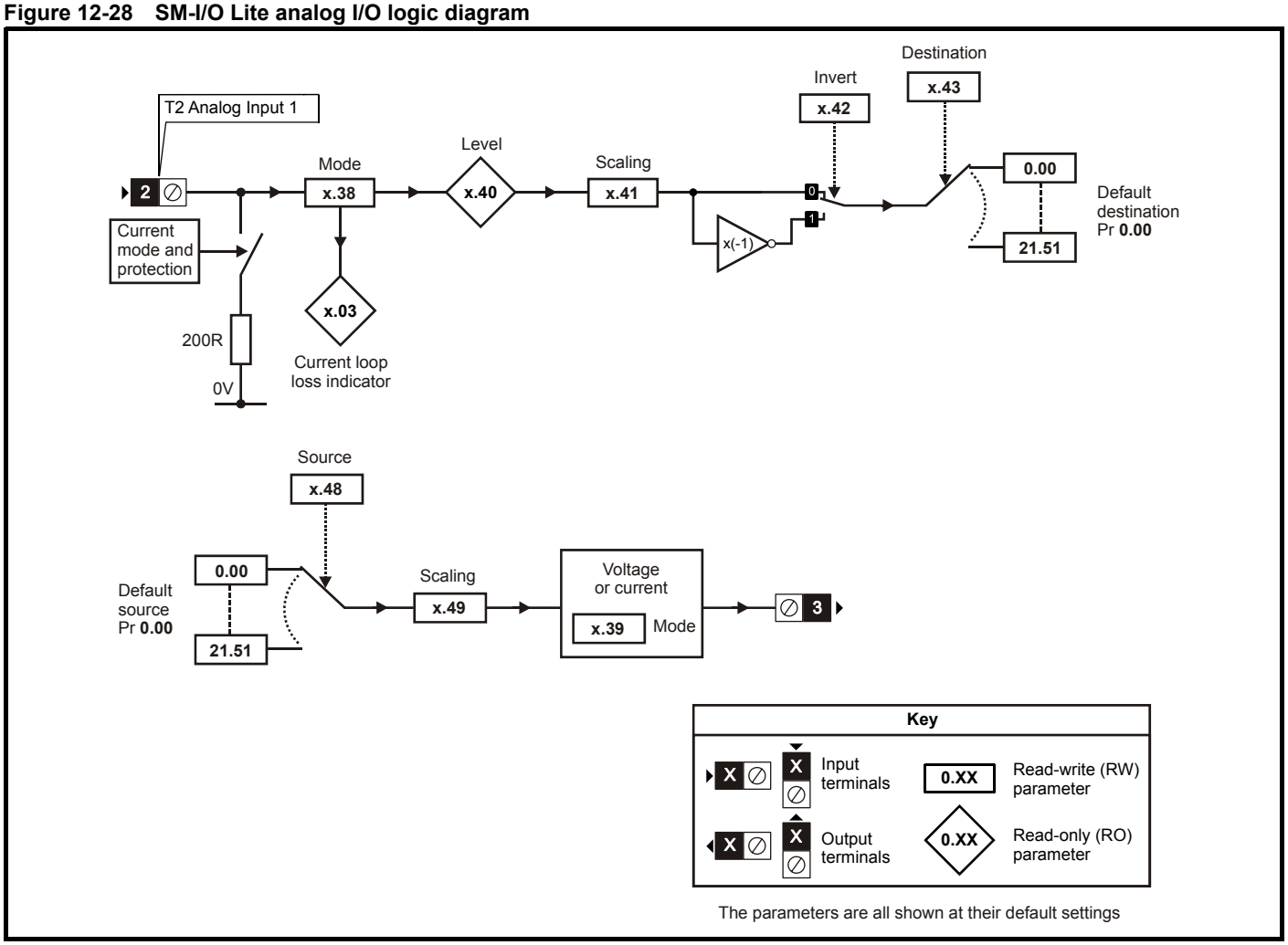

SM--I/O Lite parameters

Parameter		Range(⇳)	Default(⇨)	Type						SM-I/O	
										Lite	Timer
x.01	Solutions Module ID	0 to 599	SM-I/O Lite: 207	RO	Uni			PT	US	✓	✓
x.02	Solutions Module software version	0.00 to 99.99		RO	Uni		NC	PT		✓	✓
x.03	Current loop loss indicator	OFF (0) or On (1)		RO	Bit		NC	PT		✓	✓
x.04	T5 digital input 4 state	OFF (0) or On (1)		RO	Bit		NC	PT		✓	✓
x.05	T6 digital input 5 state	OFF (0) or On (1)		RO	Bit		NC	PT		✓	✓
x.06	T7 digital input 6 state	OFF (0) or On (1)		RO	Bit		NC	PT		✓	✓
x.07	Relay 1 state	OFF (0) or On (1)		RO	Bit		NC	PT		✓	✓
x.14	T5 digital input 4 invert	OFF (0) or On (1)	OFF (0)	RW	Bit				US	✓	✓
x.15	T6 digital input 5 invert	OFF (0) or On (1)	OFF (0)	RW	Bit				US	✓	✓
x.16	T7 digital input 6 invert	OFF (0) or On (1)	OFF (0)	RW	Bit				US	✓	✓
x.17	Relay 1 invert	OFF (0) or On (1)	OFF (0)	RW	Bit				US	✓	✓
x.20	Digital I/O read word	0 to 255		RO	Uni		NC	PT		✓	✓
x.24	T5 digital input 4 destination	Pr **0.00** to Pr **50.99**	Pr **0.00**	RW	Uni	DE		PT	US	✓	✓
x.25	T6 digital input 5 destination	Pr **0.00** to Pr **50.99**	Pr **0.00**	RW	Uni	DE		PT	US	✓	✓
x.26	T7 digital input 6 destination	Pr **0.00** to Pr **50.99**	Pr **0.00**	RW	Uni	DE		PT	US	✓	✓
x.27	Relay 1 source	Pr **0.00** to Pr **50.99**	Pr **0.00**	RW	Uni			PT	US	✓	✓
x.38	Analog input 1 mode	0-20 (0), 20-0 (1), 4-20.tr (2), 20-4.tr (3), 4-20 (4), 20-4 (5), VOLt(6)	0-20 (0)	RW	Txt				US	✓	✓
x.39	Analog output mode	0-20 (0), 20-0 (1), 4-20 (2), 20-4 (3), VOLt (4)	0-20 (0)	RW	Txt				US	✓	✓
x.40	Analog input 1	±100.0%		RO	Bi		NC	PT		✓	✓
x.41	Analog input 1 scaling	0 to 4.000	1.000	RW	Uni				US	✓	✓
x.42	Analog input 1 invert	OFF (0) or On (1)	OFF (0)	RW	Bit				US	✓	✓
x.43	Analog input 1 destination	Pr **0.00** to Pr **50.99**	Pr **0.00**	RW	Uni	DE		PT	US	✓	✓
x.48	Analog output 1 source	Pr **0.00** to Pr **50.99**	Pr **0.00**	RW	Uni			PT	US	✓	✓
x.49	Analog output 1 scaling	0.000 to 4.000	1.000	RW	Uni				US	✓	✓
x.50	Solutions Module error status*	0 to 255		RO	Uni		NC	PT		✓	✓
x.51	Solutions Module software sub-version	0 to 99		RO	Uni		NC	PT		✓	✓

RW	Read / Write	RO	Read only	Uni	Unipolar	Bi	Bi-polar	Bit	Bit parameter	Txt	Text string		
FI	Filtered	DE	Destination	NC	Not cloned	RA	Rating dependent	PT	Protected	US	User save	PS	Power down save

*See trip SLX.Er, *Automation (I/O Expansion) module category* on page 242.

Figure 12-29 SM-I/O PELV digital I/O logic diagram

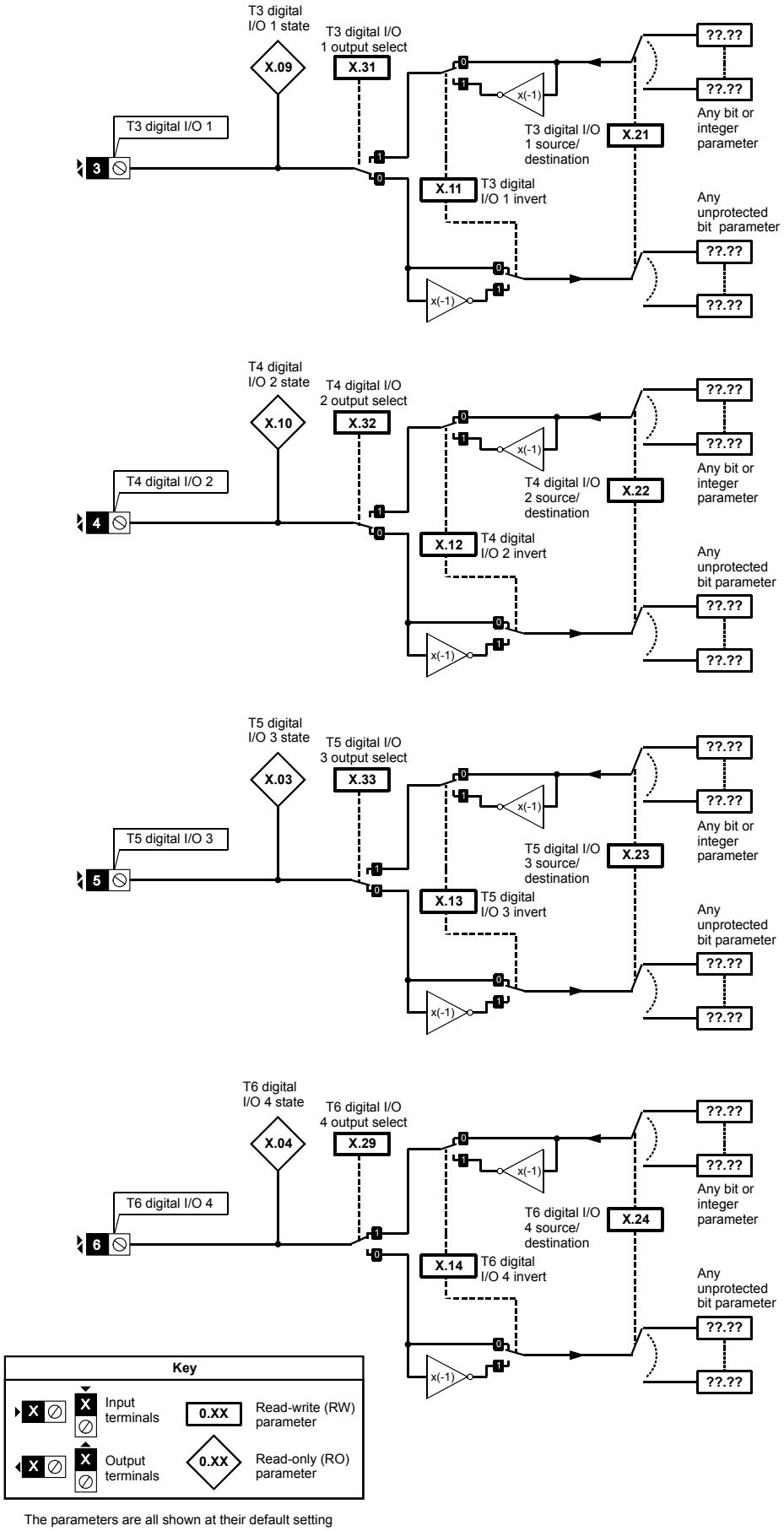

The parameters are all shown at their default setting

Figure 12-30 SM-I/O PELV digital input logic diagram

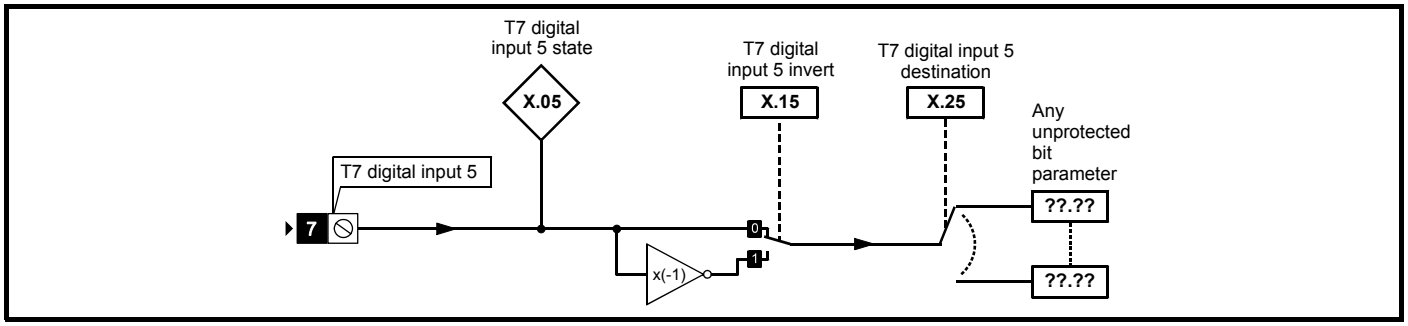

Figure 12-31 SM-I/O PELV relay logic diagram

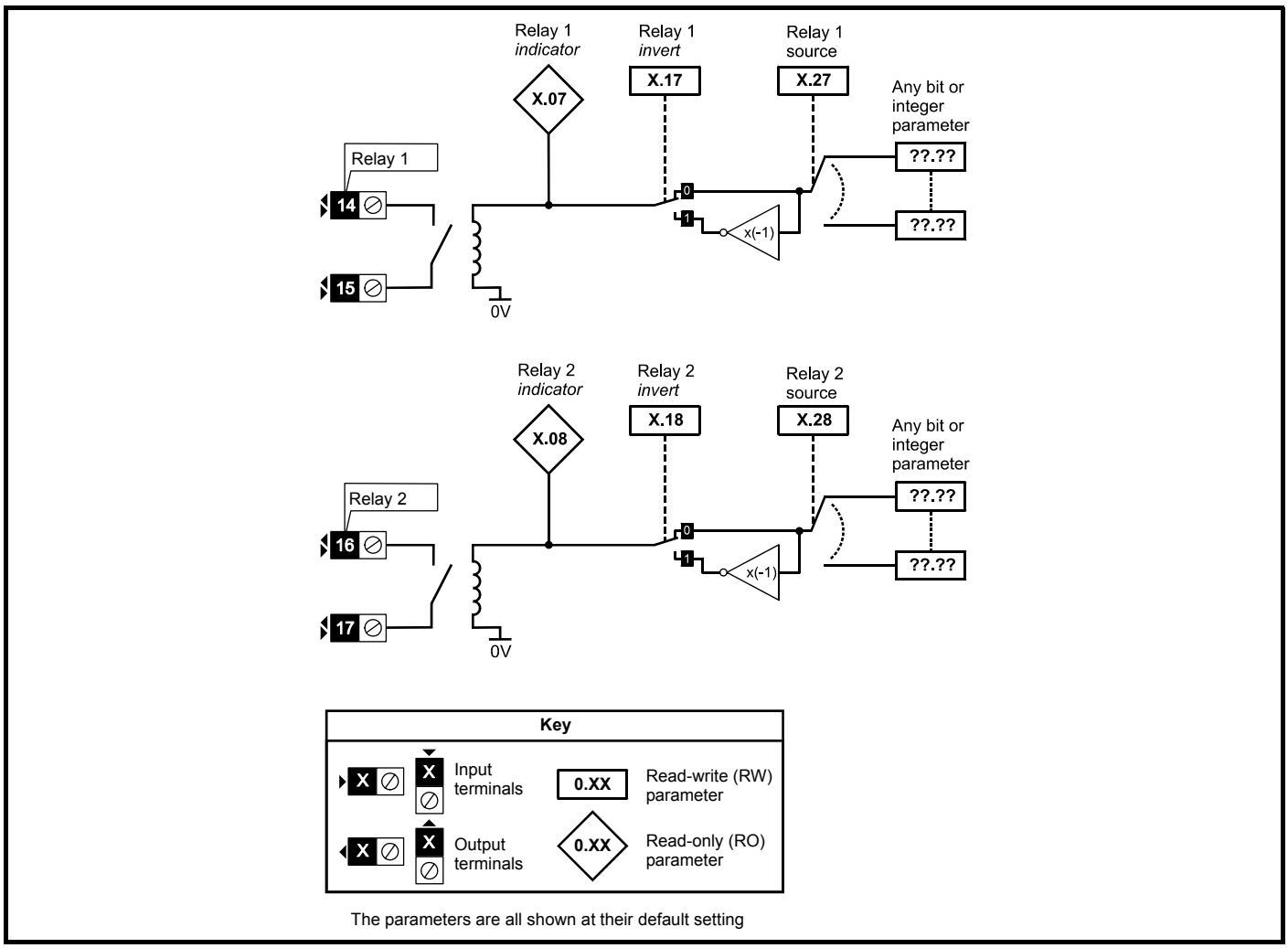

Figure 12-32 SM-I/O PELV analog input logic diagram

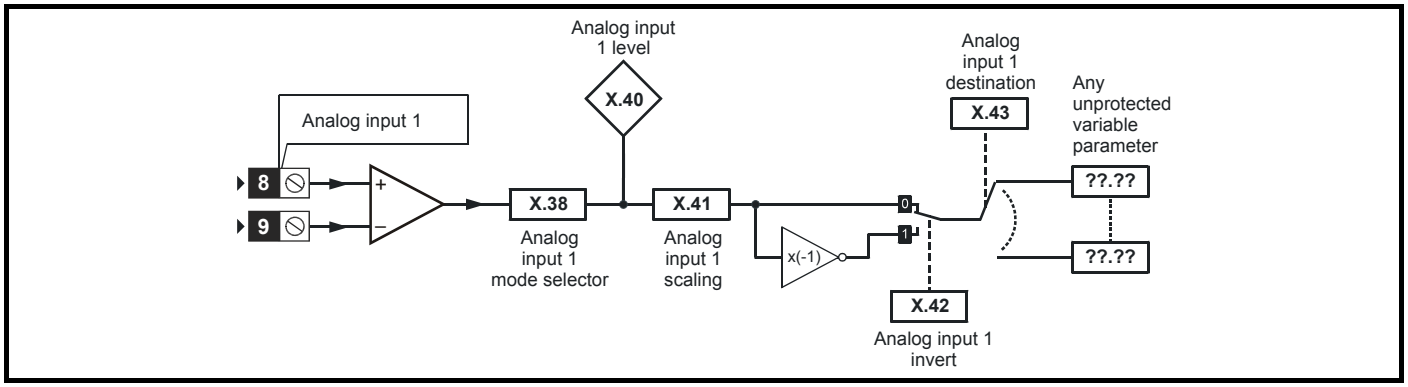

Figure 12-33 SM-I/O PELV analog output logic diagram

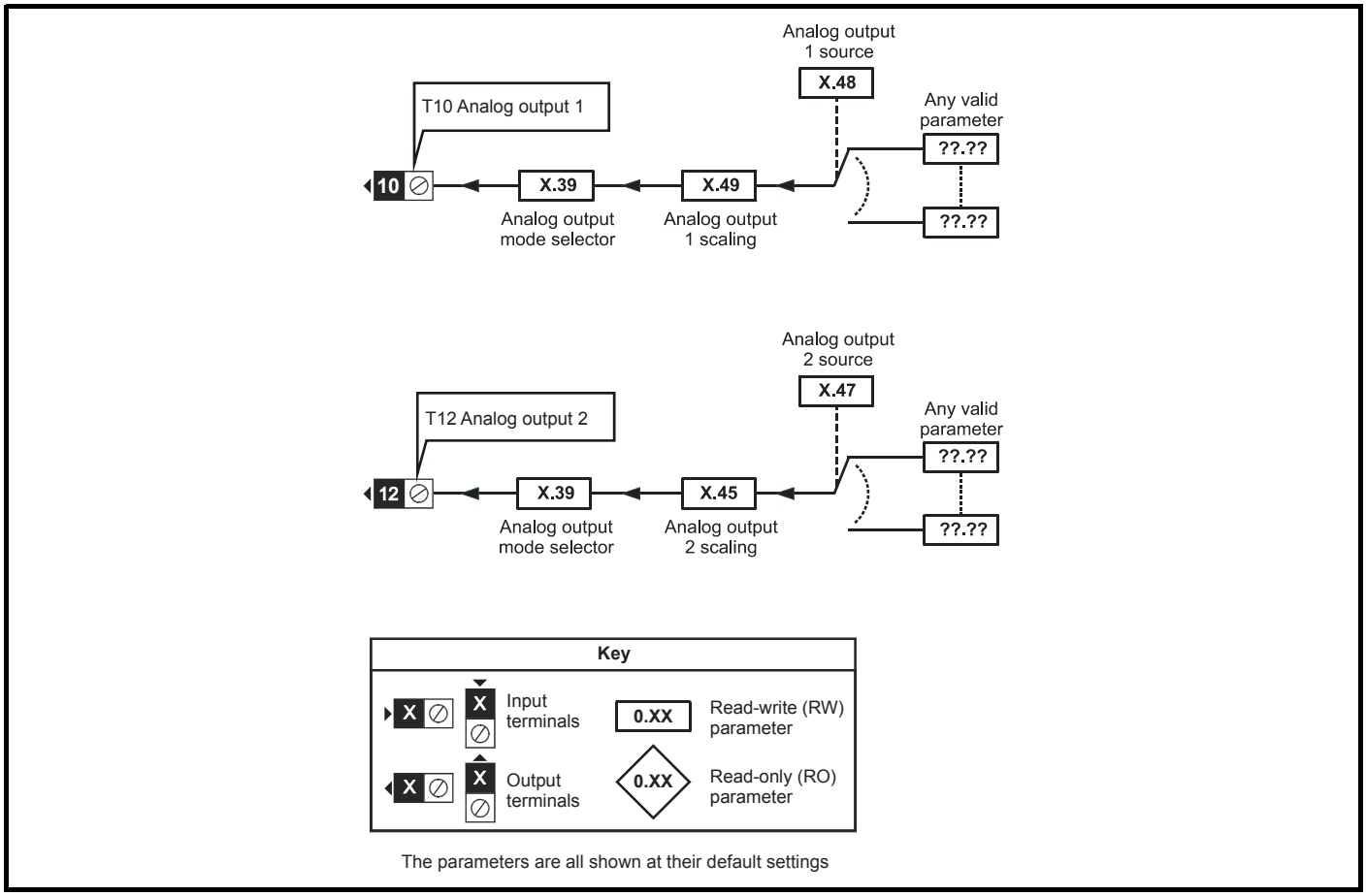

SM-I/O PELV parameters

Parameter		Range(⇳)	Default(⇨)	Type					
x.01	Solutions Module ID	0 to 599	204	RO	Uni			PT	US
x.02	Solutions Module software version	0.00 to 99.99		RO	Uni		NC	PT	
x.03	T5 digital I/O 3 state	OFF (0) or On (1)		RO	Bit		NC	PT	
x.04	T6 digital I/O 4 state	OFF (0) or On (1)		RO	Bit		NC	PT	
x.05	T7 digital input 5 state	OFF (0) or On (1)		RO	Bit		NC	PT	
x.07	Relay 1 state	OFF (0) or On (1)		RO	Bit		NC	PT	
x.08	Relay 2 state	OFF (0) or On (1)		RO	Bit		NC	PT	
x.09	T3 digital I/O 1 state	OFF (0) or On (1)		RO	Bit		NC	PT	
x.10	T4 digital I/O 2 state	OFF (0) or On (1)		RO	Bit		NC	PT	
x.11	T3 digital I/O 1 invert	OFF (0) or On (1)	OFF (0)	RW	Bit				US
x.12	T4 digital I/O 2 invert	OFF (0) or On (1)	OFF (0)	RW	Bit				US
x.13	T5 digital I/O 3 invert	OFF (0) or On (1)	OFF (0)	RW	Bit				US
x.14	T6 digital I/O 4 invert	OFF (0) or On (1)	OFF (0)	RW	Bit				US
x.15	T7 digital input 5 invert	OFF (0) or On (1)	OFF (0)	RW	Bit				US
x.16	Disable PELV User power supply absent trip	OFF (0) or On (1)	OFF (0)	RW	Bit				US
x.17	Relay 1 invert	OFF (0) or On (1)	OFF (0)	RW	Bit				US
x.18	Relay 2 invert	OFF (0) or On (1)	OFF (0)	RW	Bit				US
x.19	Freeze flag	OFF (0) or On (1)	OFF (0)	RW	Bit				US
x.20	Digital I/O read word	0 to 255		RO	Uni		NC	PT	
x.21	T3 digital I/O 1 source/destination	Pr **0.00** to Pr **50.99**	Pr **0.00**	RW	Uni	DE		PT	US
x.22	T4 digital I/O 2 source/destination	Pr **0.00** to Pr **50.99**	Pr **0.00**	RW	Uni	DE		PT	US
x.23	T5 digital I/O 3 source/destination	Pr **0.00** to Pr **50.99**	Pr **0.00**	RW	Uni	DE		PT	US
x.24	T6 digital I/O 4 source/destination	Pr **0.00** to Pr **50.99**	Pr **0.00**	RW	Uni	DE		PT	US
x.25	T7 digital input 5 destination	Pr **0.00** to Pr **50.99**	Pr **0.00**	RW	Uni	DE		PT	US
x.27	Relay 1 source	Pr **0.00** to Pr **50.99**	Pr **0.00**	RW	Uni			PT	US
x.28	Relay 2 source	Pr **0.00** to Pr **50.99**	Pr **0.00**	RW	Uni			PT	US
x.29	T6 digital I/O 4 output select	OFF (0) or On (1)	On (1)	RW	Bit				US
x.31	T3 digital I/O 1 output select	OFF (0) or On (1)	OFF (0)	RW	Bit				US
x.32	T4 digital I/O 2 output select	OFF (0) or On (1)	OFF (0)	RW	Bit				US
x.33	T5 digital I/O 3 output select	OFF (0) or On (1)	OFF (0)	RW	Bit				US
x.38	Analog input 1 mode	0-20 (0), 20-0 (1), 4-20.tr (2), 20-4.tr (3), 4-20 (4), 20-4 (5)	0-20 (0)	RW	Txt				US
x.39	Analog output mode	0-20 (0), 20-0 (1), 4-20 (2), 20-4 (3)	0-20 (0)	RW	Txt				US
x.40	Analog input 1 level	0.0 to 100.0%		RO	Bi		NC	PT	
x.41	Analog input 1 scaling	0.000 to 4.000	1.000	RW	Uni				US
x.42	Analog input 1 invert	OFF (0) or On (1)	OFF (0)	RW	Bit				US
x.43	Analog input 1 destination	Pr **0.00** to Pr **50.99**	Pr **0.00**	RW	Uni	DE		PT	US
x.45	Analog output 2 scaling	0.000 to 4.000	1.000	RW	Uni				US
x.47	Analog output 2 source	Pr **0.00** to Pr **50.99**	Pr **0.00**	RW	Uni			PT	US
x.48	Analog output 1 source	Pr **0.00** to Pr **50.99**	Pr **0.00**	RW	Uni			PT	US
x.49	Analog output 1 scaling	0.000 to 4.000	1.000	RW	Uni				US
x.50	Solutions Module error status*	0 to 255		RO	Uni		NC	PT	
x.51	Solutions Module software sub-version	0 to 99		RO	Uni		NC	PT	

RW	Read / Write	RO	Read only	Uni	Unipolar	Bi	Bi-polar	Bit	Bit parameter	Txt	Text string		
FI	Filtered	DE	Destination	NC	Not cloned	RA	Rating dependent	PT	Protected	US	User save	PS	Power down save

*See trip SLX.Er, *Automation (I/O Expansion) module category* on page 242.

Figure 12-34 SM-I/O 24V Protected digital I/O logic diagram

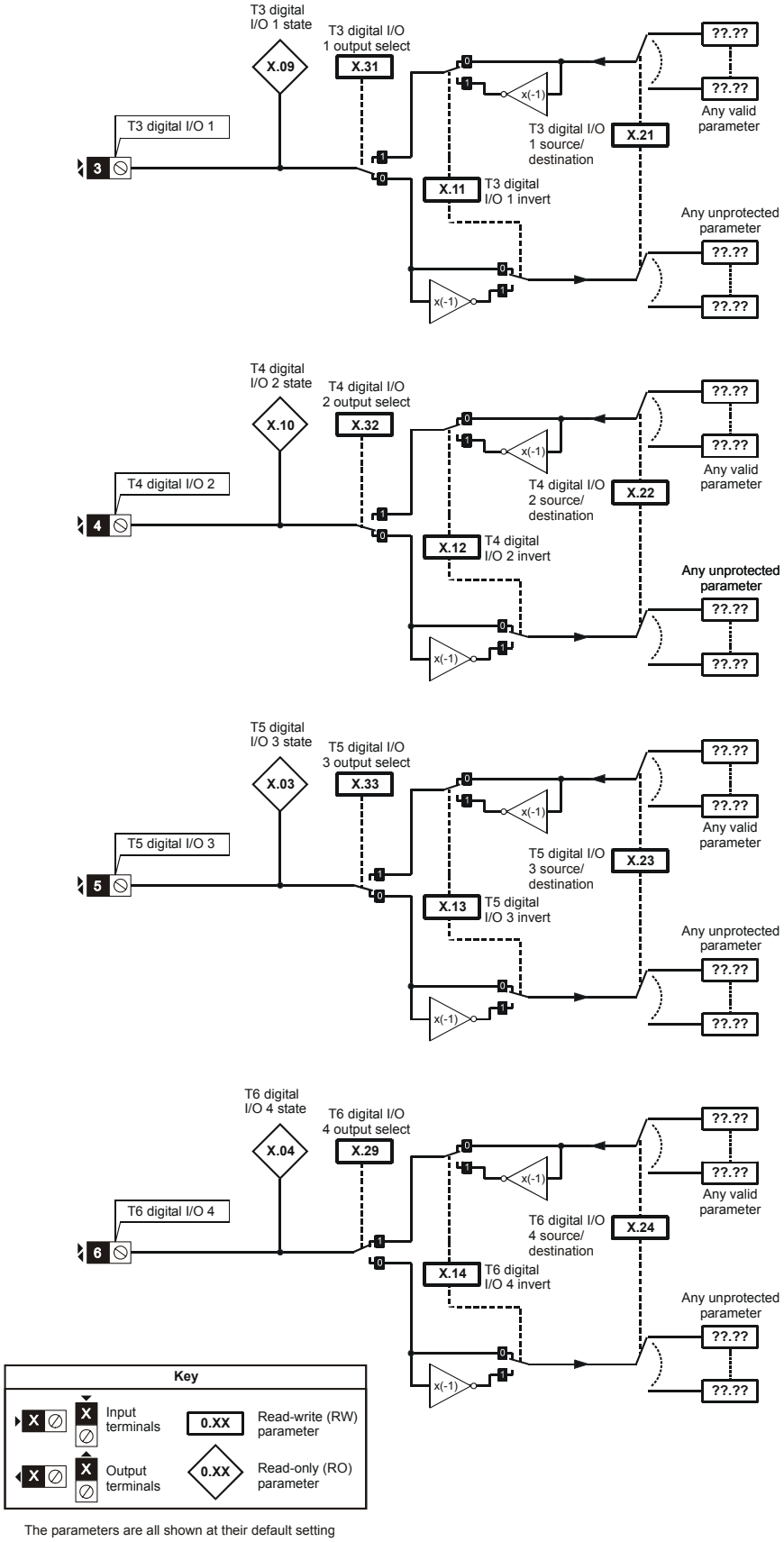

The parameters are all shown at their default setting

Figure 12-35 SM-I/O 24V Protected digital I/O logic diagram

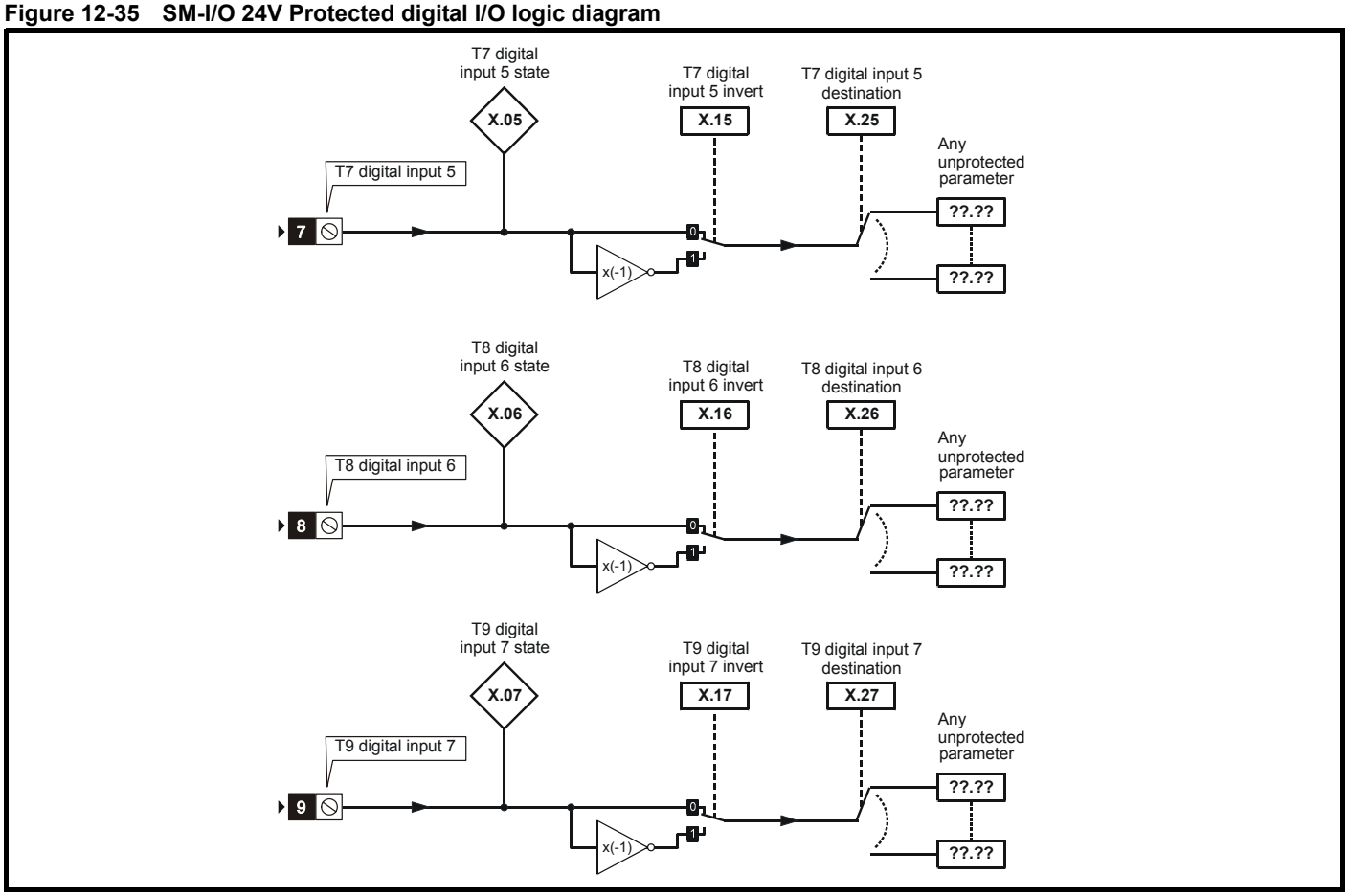

Figure 12-36 SM-I/O 24V Protected relay logic diagram

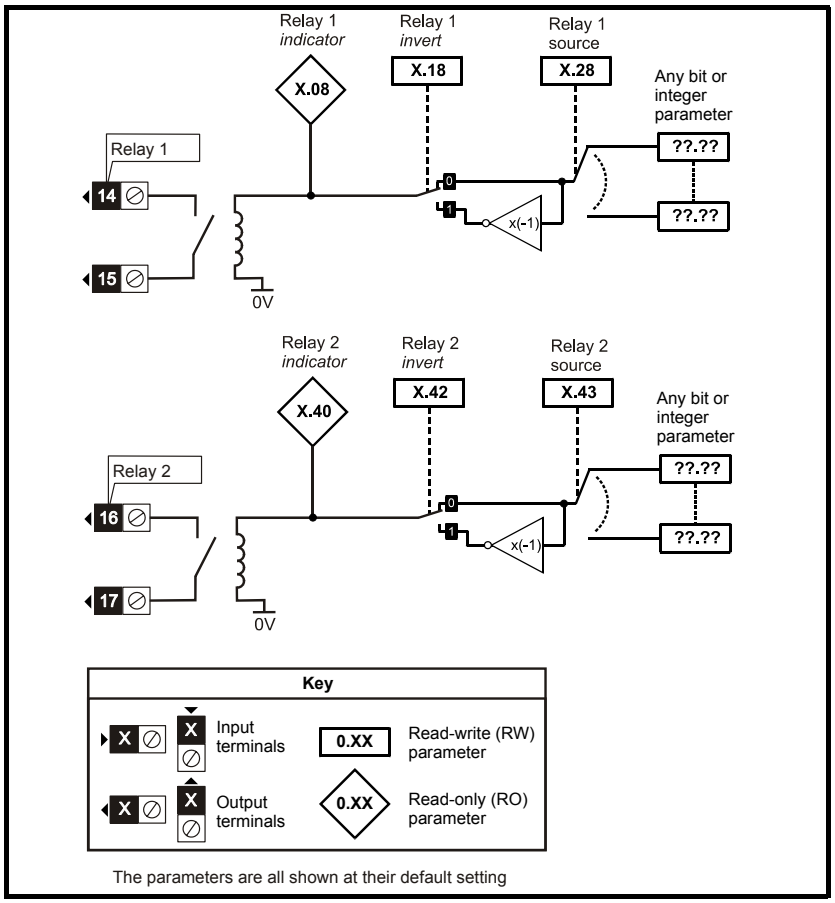

Figure 12-37 SM-I/O 24V Protected analog output logic diagram

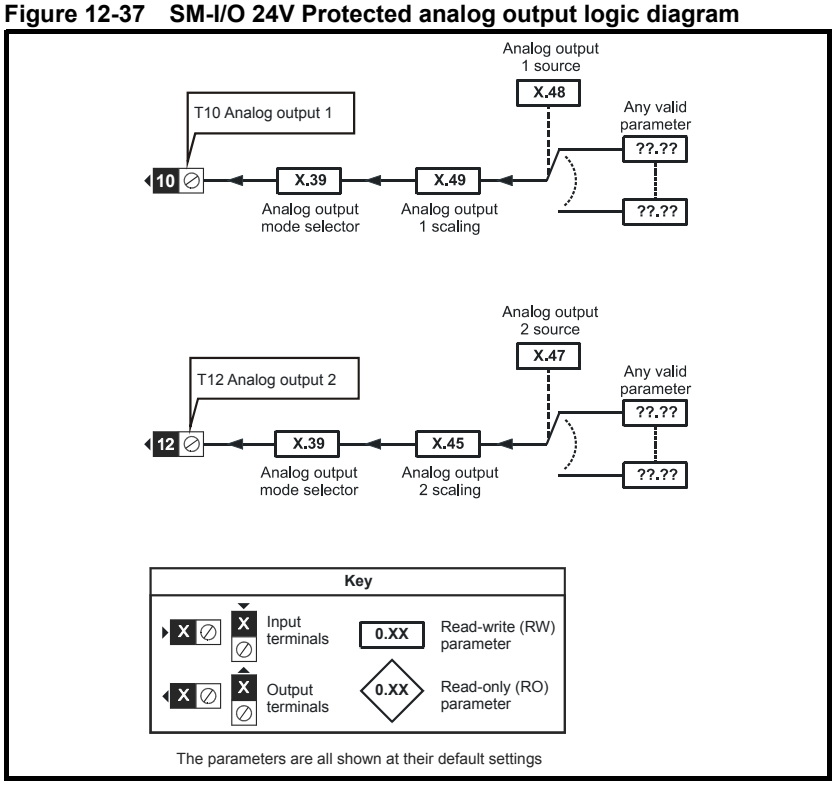

SM-I/O 24V Protected parameters

Parameter		Range(⇳)	Default(⇨)	Type					
x.01	Solutions Module ID	0 to 599	205	RO	Uni			PT	US
x.02	Solutions Module Main Software Version	0.00 to 99.99		RO	Uni		NC	PT	
x.03	T5 digital I/O 3 state	OFF (0) or On (1)		RO	Bit		NC	PT	
x.04	T6 digital I/O 4 state	OFF (0) or On (1)		RO	Bit		NC	PT	
x.05	T7 digital input 5 state	OFF (0) or On (1)		RO	Bit		NC	PT	
x.06	T8 digital input 6 state	OFF (0) or On (1)		RO	Bit		NC	PT	
x.07	T9 digital input 7 state	OFF (0) or On (1)		RO	Bit		NC	PT	
x.08	Relay 1 state	OFF (0) or On (1)		RO	Bit		NC	PT	
x.09	T3 digital I/O 1 state	OFF (0) or On (1)		RO	Bit		NC	PT	
x.10	T4 digital I/O 2 state	OFF (0) or On (1)		RO	Bit		NC	PT	
x.11	T3 digital I/O 1 invert	OFF (0) or On (1)	OFF (0)	RW	Bit				US
x.12	T4 digital I/O 2 invert	OFF (0) or On (1)	OFF (0)	RW	Bit				US
x.13	T5 digital I/O 3 invert	OFF (0) or On (1)	OFF (0)	RW	Bit				US
x.14	T6 digital I/O 4 invert	OFF (0) or On (1)	OFF (0)	RW	Bit				US
x.15	T7 digital input 5 invert	OFF (0) or On (1)	OFF (0)	RW	Bit				US
x.16	T8 digital input 6 invert	OFF (0) or On (1)	OFF (0)	RW	Bit				US
x.17	T9 digital input 7 invert	OFF (0) or On (1)	OFF (0)	RW	Bit				US
x.18	Relay 1 invert	OFF (0) or On (1)	OFF (0)	RW	Bit				US
x.20	Digital I/O read word	0 to 255		RO	Uni		NC	PT	
x.21	T3 digital I/O 1 source/destination	Pr **0.00** to Pr **50.99**	Pr **0.00**	RW	Uni	DE			US
x.22	T4 digital I/O 2 source/destination	Pr **0.00** to Pr **50.99**	Pr **0.00**	RW	Uni	DE			US
x.23	T5 digital I/O 3 source/destination	Pr **0.00** to Pr **50.99**	Pr **0.00**	RW	Uni	DE			US
x.24	T6 digital I/O 4 source/destination	Pr **0.00** to Pr **50.99**	Pr **0.00**	RW	Uni	DE			US
x.25	T7 digital input 5 destination	Pr **0.00** to Pr **50.99**	Pr **0.00**	RW	Uni	DE			US
x.26	T8 digital input 6 destination	Pr **0.00** to Pr **50.99**	Pr **0.00**	RW	Uni	DE			US
x.27	T9 digital input 7 destination	Pr **0.00** to Pr **50.99**	Pr **0.00**	RW	Uni	DE			US
x.28	Relay 1 source	Pr **0.00** to Pr **50.99**	Pr **0.00**	RW	Uni				US
x.29	T6 digital I/O 4 output select	OFF (0) or On (1)	On (1)	RW	Bit				US
x.31	T3 digital I/O 1 output select	OFF (0) or On (1)	OFF (0)	RW	Bit				US
x.32	T4 digital I/O 2 output select	OFF (0) or On (1)	OFF (0)	RW	Bit				US
x.33	T5 digital I/O 3 output select	OFF (0) or On (1)	OFF (0)	RW	Bit				US
x.39	Analog output mode	0-20, 20-0, 4-20, 20-4	0-20	RW	Uni				US
x.40	Relay 2 state	0.0 or 100.0 %		RO	Bit		NC	PT	
x.42	Relay 2 invert	OFF (0) or On (1)	OFF (0)	RW	Bit				US
x.43	Relay 2 source	Pr **0.00** to Pr **50.99**	Pr **0.00**	RW	Uni				US
x.45	Analog output 2 scaling	0.000 to 4.000	1.000	RW	Uni				US
x.47	Analog output 2 source	Pr **0.00** to Pr **50.99**	Pr **0.00**	RW	Uni				US
x.48	Analog output 1 source	Pr **0.00** to Pr **50.99**	Pr **0.00**	RW	Uni				US
x.49	Analog output 1 scaling	0.000 to 4.000	1.000	RW	Uni				US
x.50	Solutions Module error status	0 to 255		RO	Uni		NC	PT	
x.51	Solutions Module software sub-version	0 to 99		RO	Uni		NC	PT	

Figure 12-38 SM-I/O 120V digital input logic diagram

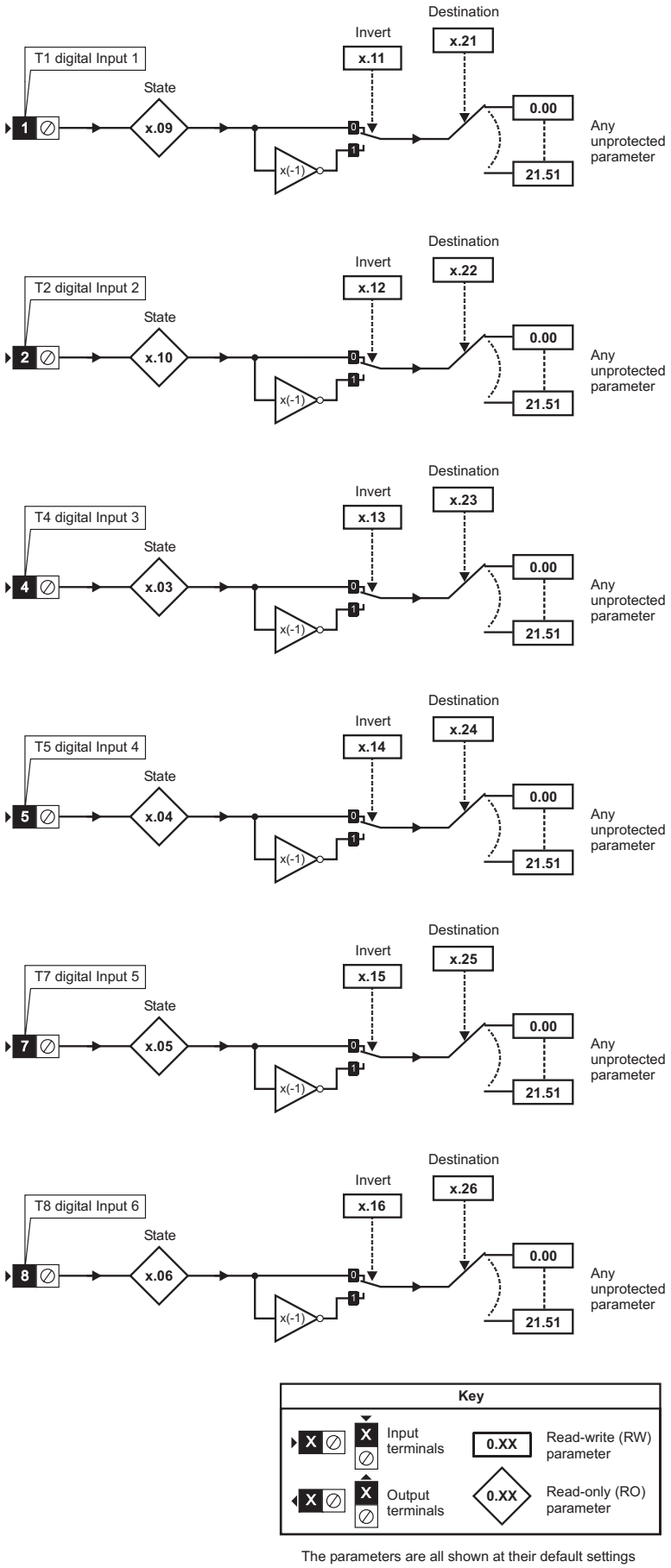

The parameters are all shown at their default settings

Figure 12-39 SM-I/O 120V relay diagram

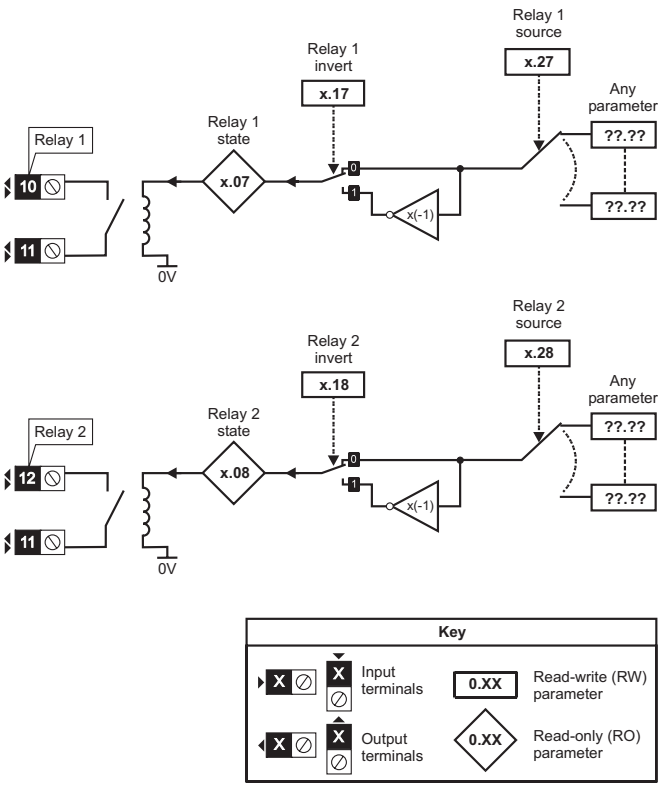

The parameters are all shown at their default settings

SM-I/O 120V parameters

Parameter		Range(⇳)	Default(⇨)	Type					
x.01	Solutions Module ID	0 to 599	206	RO	Uni			PT	US
x.02	Solutions Module software version	0.00 to 99.99		RO	Uni		NC	PT	
x.03	T4 digital input 3 state	OFF (0) or On (1)		RO	Bit		NC	PT	
x.04	T5 digital input 4 state	OFF (0) or On (1)		RO	Bit		NC	PT	
x.05	T7 digital input 5 state	OFF (0) or On (1)		RO	Bit		NC	PT	
x.06	T8 digital input 6 state	OFF (0) or On (1)		RO	Bit		NC	PT	
x.07	Relay 1 state	OFF (0) or On (1)		RO	Bit		NC	PT	
x.08	Relay 2 state	OFF (0) or On (1)		RO	Bit		NC	PT	
x.09	T1 digital input 1 state	OFF (0) or On (1)		RO	Bit		NC	PT	
x.10	T2 digital input 2 state	OFF (0) or On (1)		RO	Bit		NC	PT	
x.11	T1 digital input 1 invert	OFF (0) or On (1)	OFF (0)	RW	Bit				US
x.12	T2 digital input 2 invert	OFF (0) or On (1)	OFF (0)	RW	Bit				US
x.13	T4 digital input 3 invert	OFF (0) or On (1)	OFF (0)	RW	Bit				US
x.14	T5 digital input 4 invert	OFF (0) or On (1)	OFF (0)	RW	Bit				US
x.15	T7 digital input 5 invert	OFF (0) or On (1)	OFF (0)	RW	Bit				US
x.16	T8 digital input 6 invert	OFF (0) or On (1)	OFF (0)	RW	Bit				US
x.17	Relay 1 invert	OFF (0) or On (1)	OFF (0)	RW	Bit				US
x.18	Relay 2 invert	OFF (0) or On (1)	OFF (0)	RW	Bit				US
x.20	Digital I/O read word	0 to 255		RO	Uni		NC	PT	
x.21	T1 digital input 1 destination	Pr **0.00** to Pr **50.99**	Pr **0.00**	RW	Uni	DE		PT	US
x.22	T2 digital input 2 destination	Pr **0.00** to Pr **50.99**	Pr **0.00**	RW	Uni	DE		PT	US
x.23	T4 digital input 3 destination	Pr **0.00** to Pr **50.99**	Pr **0.00**	RW	Uni	DE		PT	US
x.24	T5 digital input 4 destination	Pr **0.00** to Pr **50.99**	Pr **0.00**	RW	Uni	DE		PT	US
x.25	T7 digital input 5 destination	Pr **0.00** to Pr **50.99**	Pr **0.00**	RW	Uni	DE		PT	US
x.26	T8 digital input 6 destination	Pr **0.00** to Pr **50.99**	Pr **0.00**	RW	Uni	DE		PT	US
x.27	Relay 1 source	Pr **0.00** to Pr **50.99**	Pr **0.00**	RW	Uni			PT	US
x.28	Relay 2 source	Pr **0.00** to Pr **50.99**	Pr **0.00**	RW	Uni			PT	US
x.50	Solutions Module error status*	0 to 255		RO	Uni		NC	PT	
x.51	Solutions Module software sub-version	0 to 99		RO	Uni		NC	PT	

RW	Read / Write	RO	Read only	Uni	Unipolar	Bi	Bi-polar	Bit	Bit parameter	Txt	Text string		
FI	Filtered	DE	Destination	NC	Not cloned	RA	Rating dependent	PT	Protected	US	User save	PS	Power down save

*See trip SLX.Er, *Automation (I/O Expansion) module category* on page 242.

12.14.3 Fieldbus module category

Fieldbus module parameters

Parameter		Range(⇳)	Default(⇨)	Type					
x.01	Solutions Module ID	0 to 599		RO	Uni			PT	US
x.02	Solutions Module software version	0.00 to 99.99		RO	Uni		NC	PT	
x.03	Fieldbus Node Address	65,535	65,535	RW	Uni				US
x.04	Fieldbus Baud Rate	-128 to +127	0	RW	Bi				US
x.05	Mode	65,535	4	RW	Uni				US
x.06	Fieldbus Diagnostic	±9,999		RO	Bi		NC	PT	
x.07	Trip Delay Time	0 to 3,000	200	RW	Uni				US
x.08	Little endianism select	OFF (0) or On (1)	On (1)	RW	Bit				US
x.09	Register control	OFF (0) or On (1)	OFF (0)	RW	Bit				US
x.10 to x.19	'I' data registers 0 - 9	-32,768 to +32,767		RW	Bi				
x.20 to x.29	'O' data registers 0 - 9	-32,768 to +32,767		RW	Bi				
x.30	Load Solutions Module defaults	OFF (0) or On (1)	OFF (0)	RW	Bit				US
x.31	Save Solutions Module parameters	OFF (0) or On (1)	OFF (0)	RW	Bit				US
x.32	Request to reinitialise	OFF (0) or On (1)	OFF (0)	RW	Bit				
x.33	Download from Fieldbus Solutions Module	OFF (0) or On (1)	OFF (0)	RW	Bit				
x.34	Compression	OFF (0) or On (1)	OFF (0)	RW	Bit				US
x.35	Serial number	-2,147,483,648 to 2,147,483,647		RO	Bi		NC	PT	
x.36 to x.37	Fieldbus specific	OFF (0) or On (1)	OFF (0)	RW	Bit				US
x.38	Fieldbus specific defined mode	0 to 255	0	RW	Uni				US
x.39	Cyclic input configuration	0 to 255	0	RW	Uni				US
x.40	Cyclic output configuration	0 to 255	0	RW	Uni				US
x.41 to x.43	Fieldbus specific	0 to 255	0	RW	Uni				US
x.44 to x.48	Fieldbus specific	0 to 255	0	RO	Uni			PT	
x.49	Mapping error status	0 to 255	0	RO	Uni			PT	
x.50	Solutions Module error status*	0 to 255		RO	Uni		NC	PT	

RW	Read / Write	RO	Read only	Uni	Unipolar	Bi	Bi-polar	Bit	Bit parameter	Txt	Text string		
FI	Filtered	DE	Destination	NC	Not cloned	RA	Rating dependent	PT	Protected	US	User save	PS	Power down save

*See trip SLX.Er, *Fieldbus module category* on page 242.

12.14.4 SM-LON

Parameter		Range(⇳)	Default(⇨)	Type					
x.01	Solutions Module ID	0 to 599	401	RO	Uni			PT	US
x.02	Solutions Module software version	0.00 to 99.99		RO	Uni		NC	PT	
x.03	Node ID	0 to 127	0	RW	Uni				
x.06	Option module diagnostic information	-9999 to 9999	0	RW	Uni				
x.07	Network loss trip	0 to 1	0	RW	Uni				
x.10	Subnet ID	0 to 255	0	RW	Uni				
x.11	Domain ID length	0 to 6	0	RW	Uni				
x.12	Domain ID byte 1	0 to 255	0	RW	Uni				
x.13	Domain ID byte 2	0 to 255	0	RW	Uni				
x.14	Domain ID byte 3	0 to 255	0	RW	Uni				
x.15	Domain ID byte 4	0 to 255	0	RW	Uni				
x.16	Domain ID byte 5	0 to 255	0	RW	Uni				
x.17	Domain ID byte 6	0 to 255	0	RW	Uni				
x.30	Load Option Defaults	Off (0) or On (1)	Off (0)	RW	Bit				
x.31	Save option parameters	Off (0) or On (1)	Off (0)	RW	Bit				
x.32	Request to re-initialise	Off (0) or On (1)	Off (0)	RW	Bit				
x.33	Restore parameters from option module	Off (0) or On (1)	Off (0)	RW	Bit				
x.34	Initialise drive reference selectors	Off (0) or On (1)	Off (0)	RW	Bit				
x.35	Option module serial number	-2147483648 to 2147483647		RO	Bi		NC	PT	
x.36	Transmit service pin message	Off (0) or On (1)	Off (0)	RW	Bit				
x.37	Wink active	Off (0) or On (1)	Off (0)	RW	Bit				
x.38	Unconfigure option module	0 to 1	0	RW	Uni				
x.39	Default configuration property storage	0 to 1	0	RW	Uni				
x.50	Module error status	0 to 255		RO	Uni		NC	PT	
x.51	Module software sub-version	0 to 99		RO	Uni		NC	PT	

RW	Read / Write	RO	Read only	Uni	Unipolar	Bi	Bi-polar	Bit	Bit parameter	Txt	Text string		
FI	Filtered	DE	Destination	NC	Not cloned	RA	Rating dependent	PT	Protected	US	User save	PS	Power down save

12.15 Menu 17: Building Automation Network

Parameter		Range(⇳)	Default(⇨)	Type					
17.01	ID code	0 to 599	402	RO	Uni			PT	US
17.02	Software version	0.00 to 99.99		RO	Uni		NC	PT	
17.03	MAC/Node address	0 to 65535	1	RW	Uni				US
17.04	Baud rate	0 to 127	0	RW	Uni				US
17.05	Building Automated Network protocol	0 to 65535	0	RW	Uni				US
17.06	Received message counter	0 to 2^{31} - 1		RO	Uni		NC	PT	
17.07	MS/TP maximum master MAC address	0 to 3000	127	RW	Uni				US
17.10	Device object identifier	±32767	0	RW	Bi				US
17.35	CRC errors	0 to 9999		RO	Uni		NC	PT	
17.38	Data format	0 to 255	0	RW	Uni				US
17.39	Response turn-around time	0 to 255 ms	5	RW	Uni		NC		
17.44	Real-time clock (RTC) back-up battery low	0 to 255	0	RO	Uni		NC	PT	
17.50	Building Automation Network error status	0 to 255		RO	Uni		NC	PT	
17.51	Module software sub-version	0 to 99		RO	Uni		NC	PT	

12.16 Menu 18: Application menu 1

Parameter		Range(⇳)	Default(⇨)	Type					
18.01	Application menu 1 power-down saved integer	-32,768 to +32,767	0	RW	Bi		NC		PS
18.02 to 18.10	Application menu 1 read-only integer	-32,768 to +32,767	0	RO	Bi		NC		
18.11 to 18.30	Application menu 1 read-write integer	-32,768 to +32,767	0	RW	Bi				US
18.31 to 18.50	Application menu 1 read-write bit	OFF (0) or On (1)	0	RW	Bit				US

12.17 Menu 19: Application menu 2

Parameter		Range(⇳)	Default(⇨)	Type					
19.01	Application menu 2 power-down saved integer	-32,768 to +32,767	0	RW	Bi		NC		PS
19.02 to 19.10	Application menu 2 read-only integer	-32,768 to +32,767	0	RO	Bi		NC		
19.11 to 19.30	Application menu 2 read-write integer	-32,768 to +32,767	0	RW	Bi				US
19.31 to 19.50	Application menu 2 read-write bit	OFF (0) or On (1)	0	RW	Bit				US

12.18 Menu 20: Application menu 3

Parameter		Range(⇳)	Default(⇨)	Type					
20.01 to 20.20	Application menu 3 read-write integer	-32,768 to +32,767	0	RW	Bi		NC		
20.21 to 20.40	Application menu 3 read-write long integer	-2^{31} to 2^{31}-1	0	RW	Bi		NC		

All menu 20 parameters are transferred to the SMARTCARD when a 4yyy transfer is performed. See section 10.2.1 *Writing to the SMARTCARD* on page 126 for more information.

RW	Read / Write	RO	Read only	Uni	Unipolar	Bi	Bi-polar	Bit	Bit parameter	Txt	Text string		
FI	Filtered	DE	Destination	NC	Not cloned	RA	Rating dependent	PT	Protected	US	User save	PS	Power down save

12.19 Menu 21: Second motor parameters

Parameter			Range(⇳)		Default(⇨)		Type					
			OL	RFC	OL	RFC						
21.01	Maximum reference clamp	{**0.02**}*	0 to 3,000.0 Hz	SPEED_LIMIT_MAX rpm	EUR> 50.0 USA> 60.0	EUR> 1,500.0 USA> 1,800.0	RW	Uni				US
21.02	Minimum reference clamp	{**0.01**}*	±3,000.0 Hz	±SPEED_LIMIT_MAX rpm	0.0		RW	Bi			PT	US
21.03	Reference selector	{**0.05**}*	A1.A2 (0), A1.Pr (1), A2.Pr (2), Pr (3), PAd (4), Prc (5)		A1.A2 (0)		RW	Txt				US
21.04	Acceleration rate	{**0.03**}*	0.0 to 3,200.0 s/100Hz	0.000 to 3,200.000 s/1000rpm	EUR> 40.0 USA> 33.3	EUR> 13.333 USA 11.111	RW	Uni				US
21.05	Deceleration rate	{**0.04**}*	0.0 to 3200.0 s/100Hz	0.000 to 3,200.000 s/1000rpm	EUR> 40.0 USA> 33.3	EUR> 13.333 USA 11.111	RW	Uni				US
21.06	Rated frequency	{**0.47**}*	0 to 3000.0 Hz	0 to 1250.0Hz	EUR> 50 USA> 60		RW	Uni				US
21.07	Rated current	{**0.46**}*	0 to RATED_CURRENT_MAX A		RATED_CURRENT_MAX		RW	Uni		RA		US
21.08	Rated load rpm	{**0.45**}*	0 to 180,000 rpm	0.00 to 40,000.00 rpm	EUR> 1,500 USA> 1,800	EUR> 1,450.00 USA> 1,770.00	RW	Uni				US
21.09	Rated voltage	{**0.44**}*	0 to AC_VOLTAGE_SET_MAX V		200V rating drive: 230V 400V rating drive: EUR> 400V, USA> 460V 575V rating drive: 575V 690V rating drive: 690V		RW	Uni		RA		US
21.10	Rated power factor	{**0.43**}*	0.000 to 1.000	0.000 to 1.000	0.85		RW	Uni		RA		US
21.11	Number of motor poles	{**0.42**}*	Auto to 120 pole (0 to 60)		Auto (0)		RW	Txt				US
21.12	Stator resistance		Size 1 to 5: 0.000 to 65.000 Ω Size 6: 0.000 to 65.000 x 10 mΩ		0.0		RW	Uni		RA		US
21.13	Voltage offset		0.0 to 25.0 V		0.0		RW	Uni		RA		US
21.14	Transient inductance ($\sigma L_{s)}$		0.000 to 500.000mH		0.000		RW	Uni		RA		US
21.15	Motor 2 active		OFF (0) or On (1)				RO	Bit		NC	PT	
21.16	Thermal time constant	{**0.45**}*	0.0 to 3000.0		89.0		RW	Uni				US
21.17	Speed controller Kp gain	{**0.07**}*		0.000 to 6.5535 rad s^{-1}		0.0300	RW	Uni				US
21.18	Speed controller Ki gain	{**0.08**}*		0.00 to 655.35 s/rad s^{-1}		0.10	RW	Uni				US
21.19	Speed controller Kd gain	{**0.09**}*		0.00000 to 0.65535 s^{-1}/rad s^{-1}		0.00000	RW	Uni				US
21.22	Current controller Kp gain	{**0.38**}*	0 to 30,000		20	200V: 75, 400V: 150, 575V: 180, 690V: 215	RW	Uni				US
21.23	Current controller Ki gain	{**0.39**}*	0 to 30,000		40	200V: 1,000, 400V: 2,000, 575V: 2,400, 690V: 3,000	RW	Uni				US
21.24	Stator inductance (L_s)			0.00 to 5,000.00 mH		0.00	RW	Uni		RA		US
21.25	Motor saturation breakpoint 1			0 to 100% of rated flux		50	RW	Uni				US
21.26	Motor saturation breakpoint 2			0 to 100% of rated flux		75	RW	Uni				US
21.27	Motoring current limit		0 to MOTOR2_CURRENT_LIMIT_MAX %		110.0		RW	Uni		RA		US
21.28	Regen current limit		0 to MOTOR2_CURRENT_LIMIT_MAX %		110.0		RW	Uni		RA		US
21.29	Symmetrical current limit	{**0.06**}*	0 to MOTOR2_CURRENT_LIMIT_MAX %		110.0		RW	Uni		RA		US

RW	Read / Write	RO	Read only	Uni	Unipolar	Bi	Bi-polar	Bit	Bit parameter	Txt	Text string		
FI	Filtered	DE	Destination	NC	Not cloned	RA	Rating dependent	PT	Protected	US	User save	PS	Power down save

* The menu 0 references are only valid when the second motor map parameters have been made active by setting Pr **11.45** to 1. (The second motor map only becomes effective when the output stage of the drive is not enabled, i.e. inh, rdY, or trip states.)

When the second motor map parameters are active, the symbol ‘Mot2’ will appear in the lower left hand corner of the LCD display or the decimal point that is second from the right on the first row of the LED display is lit.

12.20 Menu 22: Additional Menu 0 set-up

Parameter		Range(⇳)		Default(⇨)		Type					
		OL	RFC	OL	RFC						
22.01	Parameter **0.31** set-up	Pr **1.00** to Pr **50.99**		Pr **11.33**		RW	Uni			PT	US
22.02	Parameter **0.32** set-up	Pr **1.00** to Pr **50.99**		Pr **11.32**		RW	Uni			PT	US
22.03	Parameter **0.33** set-up	Pr **1.00** to Pr **50.99**		Pr **6.09**		RW	Uni			PT	US
22.04	Parameter **0.34** set-up	Pr **1.00** to Pr **50.99**		Pr **11.30**		RW	Uni			PT	US
22.05	Parameter **0.35** set-up	Pr **1.00** to Pr **50.99**		Pr **11.24**		RW	Uni			PT	US
22.06	Parameter **0.36** set-up	Pr **1.00** to Pr **50.99**		Pr **11.25**		RW	Uni			PT	US
22.07	Parameter **0.37** set-up	Pr **1.00** to Pr **50.99**		Pr **11.23**		RW	Uni			PT	US
22.10	Parameter **0.40** set-up	Pr **1.00** to Pr **50.99**		Pr **5.12**		RW	Uni			PT	US
22.11	Parameter **0.41** set-up	Pr **1.00** to Pr **50.99**		Pr **5.18**		RW	Uni			PT	US
22.18	Parameter **0.48** set-up	Pr **1.00** to Pr **50.99**		Pr **11.31**		RW	Uni			PT	US
22.20	Parameter **0.50** set-up	Pr **1.00** to Pr **50.99**		Pr **11.29**		RW	Uni			PT	US
22.21	Parameter **0.51** set-up	Pr **1.00** to Pr **50.99**		Pr **8.29**		RW	Uni			PT	US
22.22	Parameter **0.52** set-up	Pr **1.00** to Pr **50.99**		Pr **9.35**		RW	Uni			PT	US
22.23	Parameter **0.53** set-up	Pr **1.00** to Pr **50.99**		Pr **9.36**		RW	Uni			PT	US
22.24	Parameter **0.54** set-up	Pr **1.00** to Pr **50.99**		Pr **9.37**		RW	Uni			PT	US
22.25	Parameter **0.55** set-up	Pr **1.00** to Pr **50.99**		Pr **9.38**		RW	Uni			PT	US
22.26	Parameter **0.56** set-up	Pr **1.00** to Pr **50.99**		Pr **9.39**		RW	Uni			PT	US
22.27	Parameter **0.57** set-up	Pr **1.00** to Pr **50.99**		Pr **9.40**		RW	Uni			PT	US
22.28	Parameter **0.58** set-up	Pr **1.00** to Pr **50.99**		Pr **9.43**		RW	Uni			PT	US
22.29	Parameter **0.59** set-up	Pr **1.00** to Pr **50.99**		Pr **0.00**		RW	Uni			PT	US

RW	Read / Write	RO	Read only	Uni	Unipolar	Bi	Bi-polar	Bit	Bit parameter	Txt	Text string		
FI	Filtered	DE	Destination	NC	Not cloned	RA	Rating dependent	PT	Protected	US	User save	PS	Power down save

12.21 Advanced features

This section gives information on some of the advanced functions of the drive. For additional information see the *Advanced User Guide*.

Reference modes	Pr **1.14**, Pr **1.15** and Pr **8.39**
Hand / off / auto	Pr **1.52**
Fire mode	Pr **1.53** and Pr **1.54**
Braking modes	Pr **2.04** and Pr **2.08**
S ramps	Pr **2.06** and Pr **2.07**
Torque modes	Pr **4.08** and Pr **4.11**
Stop modes	Pr **6.01**, Pr **6.06**, Pr **6.07** and Pr **6.08**
Main loss modes	Pr **6.03**, Pr **6.48**, Pr **4.13** and Pr **4.14**
Catch a spinning motor	Pr **6.09** and Pr **5.40**
Fast disable	Pr **6.29**

12.21.1 Reference modes

1.14	**Reference selector**								
RW	Txt					NC		US	
⇳	A1.A2 (0), A1.Pr (2), A2.Pr (2), Pr (3), PAd (4), Prc (5)				⇨	Pad (4)			

1.15	**Preset reference selector**								
RW	Uni					NC		US	
⇳	0 to 9				⇨	0			

8.39	**T28 and T29 auto-selection disable**								
RW	Bit							US	
⇳	OFF (0) or On (1)				⇨	OFF (0)			

If Pr **8.39** is set to OFF (0), then the setting of Pr **1.14** automatically changes the operation of digital inputs T28 and T29 by configuring the destination parameters Pr **8.25** and Pr **8.26**. To allow Pr **8.25** and Pr **8.26** to be changed manually by the user, the automatic set-up must be disabled by setting Pr **8.39** to 1.

If Pr **8.39** is 0 and Pr **1.14** is changed, then a drive reset is required before the function of terminal T28 or T29 will become active.

Table 12-7 Active reference

Pr 1.14	Pr 1.15	Digital Input T28		Digital Input T29		Pr 1.49	Pr 1.50	Active Reference
		State	Function	State	Function			
A1.A2 (0)	0 or 1	0	Local Remote		No function	1	1	Analog input 1
		1				2	1	Analog input 2
	2 to 8		No function			1 or 2	2 to 8	Preset reference 2 to 8
	9 *	0	Local Remote			1	1	Analog input 1
		1				2	1	Analog input 2
			No function			1 or 2	2 to 8	Preset reference 2 to 8
A1.Pr (1)	0	0	Preset select bit 0	0	Preset select bit 1	1	1	Analog input 1
		1					2	Preset reference 2
		0		1			3	Preset reference 3
		1					4	Preset reference 4
	1		No function		No function		1	Analog input 1
	2 to 8						2 to 8	Preset reference 2 to 8
	9 *						1	Analog input 1
							2 to 8	Preset reference 2 to 8
A2.Pr (2)	0	0	Preset select bit 0	0	Preset select bit 1	2	1	Analog input 2
		1					2	Preset reference 2
		0		1			3	Preset reference 3
		1					4	Preset reference 4
	1		No function		No function		1	Analog input 2
	2 to 8						2 to 8	Preset reference 2 to 8
	9 *						1	Analog input 2
							2 to 8	Preset reference 2 to 8
Pr (3)	0	0	Preset select bit 0	0	Preset select bit 1	3	1	Preset reference 1
		1					2	Preset reference 2
		0		1			3	Preset reference 3
		1					4	Preset reference 4
	1 to 8		No function		No function		1 to 8	Preset reference 1 to 8
	9 *						1 to 8	Preset reference 1 to 8
PAd (4)			No function		No function	4		Keypad reference
Prc (5)			No function		No function	5		Precision reference

* Setting Pr **1.15** to 9 enables the Preset reference scan timer. With the scan timer enabled the preset references are selected automatically in turn. Pr **1.16** defines the time between each change.

Preset references
Preset references 1 to 8 are contained in Pr **1.21** to Pr **1.28**.

Keypad reference
If Keypad reference is selected the drive sequencer is controlled directly by the keypad keys and the keypad reference parameter (Pr **1.17**) is selected. The sequencing bits, Pr **6.30** to Pr **6.34**, and Pr **6.37** have no effect and jog is disabled.

12.21.2 Hand / Off / Auto

1.52	Enable Hand / Off / Auto keypad operating mode								
RW	Bit							US	
⇳	0 to 2				⇨	1			

Hand / Off / Auto functions are enabled if Pr **1.52** is set to a non-zero value, otherwise the keypad buttons are allocated as follows:

- Blue - Forward/Reverse
- Green - Run
- Red - Reset

When Hand / Off / Auto functions are enabled (Pr **1.52** set to either 1 or 2), then the keypad buttons will be allocated as follows:

- Blue - Auto
- Green - Hand
- Red - Off/Reset

On power-up, Auto mode is selected if Pr **1.52** is set to1, Off mode is selected if Pr **1.52** is set to 2.

Auto
In Auto mode, the reference for the motor speed/frequency will be selected by the value set in Pr **0.05**.

Hand
The speed/frequency reference Pr **0.05** is automatically set to keypad reference. The motor speed is determined by the value in the keypad control mode reference Pr **1.17**, which can be adjusted by pressing the Up/Down arrows on the keypad.

When Hand is selected from Auto, Pr **1.17** will be set to the value of the *Pre-ramp reference* (Pr **1.03**) on mode transition, so the current motor speed is maintained.

If Hand mode is selected from Off mode, the motor will ramp up to the speed determined by the value in Pr **1.17**.

Off
In Off mode, the motor will be stopped. The speed/frequency reference (Pr **0.05**) is automatically set to keypad reference allowing the value in the *keypad control mode reference* (Pr **1.17**) to be modified by pressing the Up/Down arrow keys. If Hand mode is then selected, the motor will ramp up to the speed determined by the value in Pr **1.17**.

Figure 12-40 State diagram

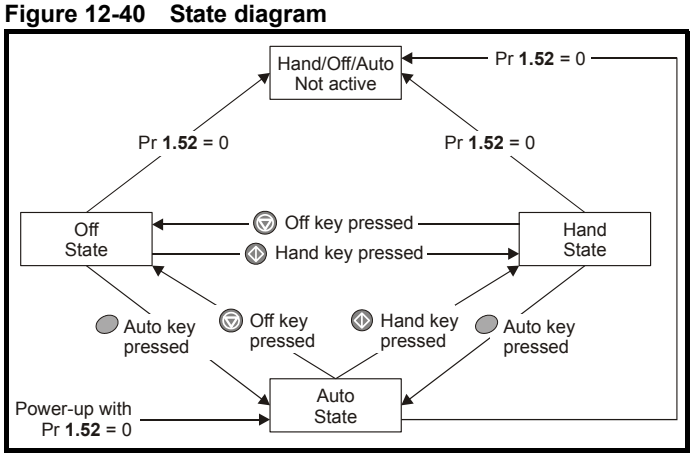

12.21.3 Fire mode

WARNING

Fire Mode - important warning.
When Fire Mode is active the motor overload and thermal protection are disabled, as well as a number of drive protection functions. Fire Mode is provided for use only in emergency situations where the safety risk from disabling protection is less than the risk from the drive tripping - typically in smoke extraction operation to permit evacuation of a building. The use of Fire Mode itself causes a risk of fire from overloading of the motor or drive, so it must only be used after careful consideration of the balance of risks.

Care must be taken to prevent inadvertent activation or de-activation of Fire Mode. Fire Mode is indicated by a flashing display text warning "Fire mode active".

Care must be taken to ensure that parameters Pr **1.53** or Pr **1.54** are not inadvertently re-allocated to different inputs or variables. It should be noted that, by default, Pr **1.54** is controlled from digital input 4 and changing Pr **6.04** or Pr **8.24** can re-allocate this digital input to another parameter. These parameters are at access level 2 in order to minimise the risk of inadvertent or unauthorised changes. It is recommended that User Security be applied to further reduce the risk (see section 5.10 *Parameter access level and security* on page 81). These parameters may also be changed via serial communications so adequate precautions should be taken if this functionality is utilised.

1.53	Fire mode reference								
RW	Uni							US	
OL	⇳	±SPEED_FREQ_MAX Hz/rpm			⇨	0.0 Hz			
RFC						0.0 rpm			

1.54	Fire mode activation								
RO	Bit							NC	US
⇳	OFF (0) or On (1)				⇨				

Emergency ventilation or fire mode allows for the purging of air from a structure during a fire. It is enabled if Pr **1.53** is set to a non zero value and activated when Pr **1.54** is set to one. When activated, the pre-ramp reference (Pr **1.03**) is set to the value of Pr **1.53** and the normal drive controls are overridden as follows:

1. Drive enable is only controlled by the Enable input (Pr **6.15**). The control word (Pr **6.43**) cannot be used to disable the drive.
2. The internal run command is forced to be active. The normal drive sequencing bits (Pr **6.30** to Pr **6.34**) and the control word have no effect.
3. The limit switch functions (Pr **6.35** and Pr **6.36**) have no effect and will not stop the motor.
4. The hard speed reference is forced to zero. The hard speed reference should not be used when fire mode is likely to be activated as this will cause an abrupt change of speed.
5. The hand/off/auto function is disabled. If this system is in the hand state when fire mode is activated it will be forced to the off state, so that hand state is not active when fire mode is de-activated.
6. Keypad mode is disabled.
7. All latching mode states are reset.

When Pr **1.54** is subsequently set to zero the drive returns to normal operation

Pr **1.54** can only be changed from a digital input and the default configuration allocates this to digital input 4.

CAUTION

Care should be undertaken when modifying parameters as setting Pr **1.53** to zero inhibits the fire mode function and changing Pr **8.24** (*Digital Input 4 source*) or Pr **6.04** (*Start/ Stop logic select*) could result in digital input 4 source to be allocated to a parameter other than Pr **1.54**.

If fire mode is activated when the drive is in a tripped state then the trip is reset.

Only the trips listed in the following table can be initiated while fire mode is active.

Trip number	String	Cause of trip
2	OU	DC bus over-voltage
3	OI.AC	AC instantaneous over-current
4	OI.br	Braking resistor instantaneous over current
5	PS	Drive power supply fault
8	PS.10V	10V user power supply overload
9	PS.24V	24V internal power supply overload
21	O.ht1	Power device over temperature based on thermal model
31	EEF	EEProm failure
36	SAVE.Er	User parameter save error
37	PSAVE.Er	Power down save parameter error
103	OIbr.P	Power module braking IGBT over current
104	OIAC.P	Power module over current detected from the module output currents
105	Oht2.P	Power module heatsink over temperature
106	OU.P	Power module DC bus over-voltage
107	Ph.P	Power module phase loss detection
108	PS.P	Power module power supply fail
109	OIdc.P	Power module over current detected from on state voltage monitoring
110	Unid.P	Power module unidentified trip
200	SL1.HF	Slot 1 Solutions Module failure
205	SL2.HF	Slot 2 Solutions Module failure
210	SL3.HF	Slot 3 Solutions Module failure
217 to 232	HF17 to HF32	Hardware faults

CAUTION

It is possible for the drive or motor to become damaged when operating in fire mode because some of the drive thermal protection trips are disabled.

12.21.4 Braking Modes

2.04	Ramp mode select									
RW	Txt								US	
OL	⇳	FASt (0), Std (1), Std.hV (2)			⇨	Std (1)				
RFC		FASt (0), Std (1)								

This parameter does not affect the acceleration ramp, as the ramp output always rises at the programmed acceleration rate subject to the current limits. It is possible in under some unusual circumstances in open-loop mode (i.e. highly inductive supply) for the motor to reach a low speed in standard ramp mode, but not completely stop. It is also possible if the drive attempts to stop the motor with an overhauling load in any mode that the motor will not stop when standard ramp mode or fast ramp mode is used. If the drive is in the deceleration state the rate of fall of the frequency or speed is monitored. If this does not fall for 10 seconds the drive forces the frequency or the speed reference to zero. This only applies when the drive is in the deceleration state and not when the reference is simply set to zero.

0: Fast ramp

Fast ramp is used where the deceleration follows the programmed deceleration rate subject to current limits.

1: Standard ramp

Standard ramp is used. During deceleration, if the voltage rises to the standard ramp level (Pr **2.08**) it causes a controller to operate, the output of which changes the demanded load current in the motor. As the controller regulates the link voltage, the motor deceleration increases as the speed approaches zero speed. When the motor deceleration rate reaches the programmed deceleration rate the controller ceases to operate and the drive continues to decelerate at the programmed rate. If the standard ramp voltage (Pr **2.08**) is set lower than the nominal DC Bus level the drive will not decelerate the motor, but it will coast to rest. The output of the ramp controller (when active) is a current demand that is fed to the frequency changing current controller (Open-loop modes) or the torque producing current controller (RFC). The gain of these controllers can be modified with Pr **4.13** and Pr **4.14**.

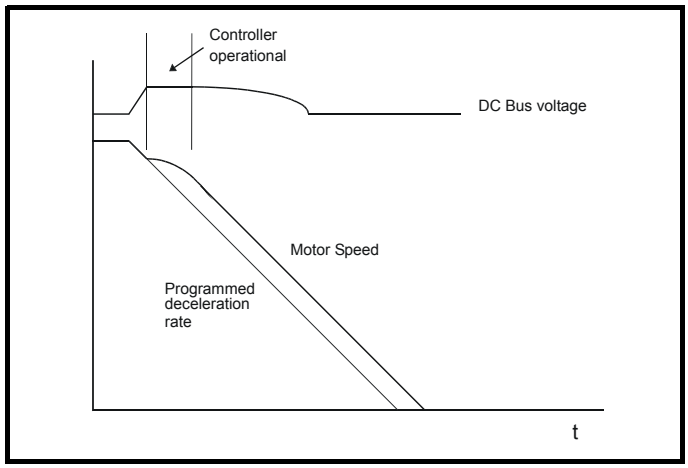

2: Standard ramp with motor voltage boost

This mode is the same as normal standard ramp mode except that the motor voltage is boosted by 20%. This increases the losses in the motor giving faster deceleration.

2.08	Standard ramp voltage									
RW	Uni		RA						US	
⇳	0 to DC_VOLTAGE_SET_MAX V				⇨	200V drive: 375 400V drive: EUR> 750 USA> 775 575V drive: 895 690V drive: 1075				

This voltage is used as the control level for standard ramp mode. If this parameter is set too low the machine will coast to rest, and if it is set too high and no braking resistor is used the drive may give an over-volt 'OV' trip. The minimum level should be greater than the voltage produced on the DC Bus by the highest supply voltage. Normally the DC Bus voltage will be approximately the rms supply line voltage x √2.

WARNING

Care should be taken in the setting of this parameter. It is recommended that the setting should be at least 50V higher than the maximum expected level of the DC Bus voltage. If this is not done, the motor may fail to decelerate on a STOP command.

12.21.5 S ramps

2.06	S ramp enable								
RW	Bit							US	
⇳	OFF (0) or On (1)				⇨	OFF (0)			

Setting this parameter enables the S ramp function. S ramp is disabled during deceleration using standard ramp. When the motor is accelerated again after decelerating in standard ramp the acceleration ramp used by the S ramp function is reset to zero.

2.07	S ramp acceleration limit								
RW	Uni							US	
OL	⇳	0.0 to 300.0 s^2/100Hz			⇨	3.1			
RFC		0.000 to 100.000 s^2/1000rpm				1.500			

This parameter defines the maximum rate of change of acceleration/ deceleration. The default values have been chosen such that for the default ramps and maximum speed, the curved parts of the S will be 25% of the original ramp if S ramp is enabled.

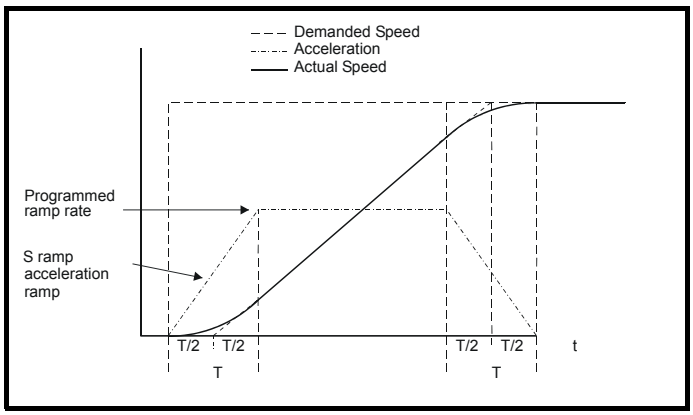

Since the ramp rate is defined in s/100Hz or s/1000rpm and the S ramp parameter is defined in s^2/100Hz or s^2/1000rpm, the time T for the 'curved' part of the S can be determined from:

T = S ramp rate of change / Ramp rate

Enabling S ramp increases the total ramp time by the period T since an additional T/2 is added to each end of the ramp in producing the S.

12.21.6 Torque modes

4.08	Torque reference								
RW	Bi							US	
⇳	±USER_CURRENT_MAX %				⇨	0.00			

Parameter for main torque reference. The normal update rate for the torque reference is 4ms. However if analog inputs 2 or 3 on the drive are used as the source of the reference, the drive is in RFC mode and the analog inputs are in voltage mode with zero offset, the sample time is reduced to 250μs.

4.11	Torque mode selector								
RW	Uni							US	
⇳	0 to 1				⇨	0			

Open loop
If this parameter is 0 normal frequency control is used. If this parameter is set to 1 the current demand is connected to the current PI controller giving closed loop torque/current demand as shown below. The current error is passed through proportional and integral terms to give a frequency reference which is limited to the range: -SPEED_FREQ_MAX to +SPEED_FREQ_MAX.

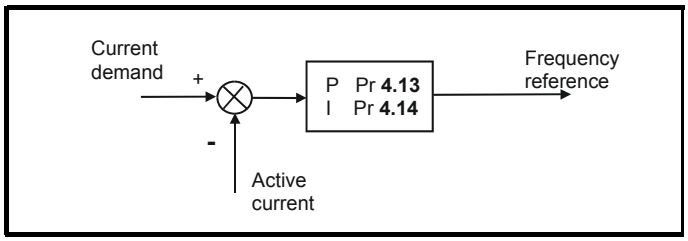

RFC
When this parameter is set to 1, 2 or 3 the ramps are not active while the drive is in the run state. When the drive is taken out of the run state, but not disabled, the appropriate stopping mode is used. It is recommended that coast stopping or stopping without ramps are used. However, if ramp stop mode is used the ramp output is pre-loaded with the actual speed at the changeover point to avoid unwanted jumps in the speed reference.

0: Speed control mode
The torque demand is equal to the speed loop output.

1: Torque control
The torque demand is given by the sum of the torque reference and the torque offset, if enabled. The speed is not limited in any way, however, the drive will trip at the overspeed threshold if runaway occurs.

12.21.7 Stop modes

6.01	Stop mode								
RW	Txt							US	
OL	⇳	COASt (0), rP (1), rP.dcl (2), dcl (3), td.dcl (4), diSAbLE (5)			⇨	rP (1)			
RFC		COASt (0), rP (1), no.rP (2)							

Open-loop
Stopping is in two distinct phases: decelerating to stop, and stopped.

Stopping Mode	Phase 1	Phase 2	Comments
0: Coast	Inverter disabled	Drive cannot be re-enabled for 1s	Delay in phase 2 allows rotor flux to decay
1: Ramp	Ramp down to zero frequency	Wait for 1s with inverter enabled	
2: Ramp followed by DC injection	Ramp down to zero frequency	Inject DC at level specified by Pr **6.06** for time defined by Pr **6.07**	
3: DC injection with zero speed detection	Low frequency current injection with detection of low speed before next phase	Inject DC at level specified by Pr **6.06** for time defined by Pr **6.07**	The drive automatically senses low speed and therefore it adjusts the injection time to suit the application. If the injection current level is too small the drive will not sense low speed (normally a minimum of 50-60% is required).
4: Timed DC injection braking stop	Inject DC at level specified by Pr **6.06** for time specified by Pr **6.07**		
5: Disable	Inverter disabled		Allows the drive to be immediately disabled and then re-enabled again immediately if required.

Once modes 3 or 4 have begun the drive must go through the ready state before being restarted either by stopping, tripping or being disabled.

If this parameter is set to DiASbLE (5), the disable stopping mode is used when the run command is removed. This mode will allow the drive to be started immediately by re-applying the run command. However, if the drive is disabled by removing the drive enable (i.e. via the Enable input or Pr **6.15** *Drive enable*) then the drive cannot be re-enabled for 1s.

RFC

Only one stopping phases exists and the ready state is entered as soon as the single stopping action is complete.

Stopping Mode	Action
0: Coast	Inhibits the inverter
1: Ramp	Stop with ramp
2: No ramp	Stop with no ramp

6.06	Injection braking level								
RW	Uni					RA		US	
OL	⇳	0.0 to 150.0 %			⇨	100.0			

Defines the current level used during DC injection braking as a percentage of motor rated current as defined by Pr **5.07**.

6.07	Injection braking time								
RW	Uni							US	
OL	⇳	0.0 to 25.0 s			⇨	1.0			

Defines the time of injection braking during phase 1 with stopping modes 3 and 4, and during phase 2 with stopping mode 2 (see Pr **6.01**).

12.21.8 Line power supply loss modes

6.03	Line power supply loss mode								
RW	Txt							US	
⇳	diS (0), StoP (1), ridE.th (2)				⇨	diS (0)			

0: diS

There is no line power supply loss detection and the drive operates normally only as long as the DC bus voltage remains within specification (i.e. >Vuu). Once the voltage falls below Vuu an under-voltage 'UV' trip occurs. This will reset itself if the voltage rises above Vuu Restart, as stated in the table below.

1: StoP - Open-loop

The action taken by the drive is the same as for ride through mode, except the ramp down rate is at least as fast as the deceleration ramp setting and the drive will continue to decelerate and stop even if the line power supply is re-applied. If normal or timed injection braking is selected the drive will use ramp mode to stop on loss of the supply. If ramp stop followed by injection braking is selected, the drive will ramp to a stop and then attempt to apply dc injection. At this point, unless the line power supply has been restored, the drive is likely to initiate a trip.

1: StoP - RFC

The speed reference is set to zero and the ramps are disabled allowing the drive to decelerate the motor to a stop under current limit. If the Line power supply is re-applied while the motor is stopping any run signal is ignored until the motor has stopped. If the current limit value is set very low level the drive may trip UV before the motor has stopped.

2: ridE.th

The drive detects line power supply loss when the DC Bus voltage falls below Vml_1. The drive then enters a mode where a closed-loop controller attempts to hold the DC Bus level at Vml_1. This causes the motor to decelerate at a rate that increases as the speed falls. If the line power supply is re-applied it will force the DC Bus voltage above the detection threshold Vml_3 and the drive will continue to operate normally.

The output of the line power supply loss controller is a current demand that is fed into the current control system and therefore the gain Pr **4.13** and Pr **4.14** must be set up for optimum control. See parameters Pr **4.13** and Pr **4.14** for set-up details.

The following table shows the voltage levels used by drives with each voltage rating.

Voltage level	200V drive	400V drive	575V drive	690V drive
Vuu	175	330	435	
Vml_1	205*	410*	540*	
Vml_2	Vml_1 - 10V	Vml_1 - 20V	Vml_1 - 25V	
Vml_3	Vml_1 + 10V	Vml_1 + 15V	Vml_1 + 50V	
Vuu Restart	215	425	590	

* Vml_1 is defined by Pr **6.48**. The values in the table above are the default values.

6.48	Line power supply loss ride through detection level								
RW	Uni					RA		US	
⇳	0 to DC_VOLTAGE_SET_MAX V				⇨	200V drive: 205 400V drive: 410 575V drive: 540 690V drive: 540			

The line power supply loss detection level can be adjusted using this parameter. If the value is reduced below the default value, the default value is used by the drive. If the level is set too high, so that the line power supply loss detection becomes active under normal operating conditions, the motor will coast to a stop.

4.13		Current loop P gain								
RW		Uni							US	
OL	⇳	0 to 30,000				⇨	All voltage ratings: 20			
RFC	⇳					⇨	200V drive: 75 400V drive: 150 575V drive: 180 690V drive: 215			

4.14		Current loop I gain								
RW		Uni							US	
OL	⇳	0 to 30,000				⇨	All voltage ratings: 40			
RFC	⇳					⇨	200V drive: 1,000 400V drive: 2,000 575V drive: 2,400 690V drive: 3,000			

Open-loop

These parameters control the proportional and integral gains of the current controller used in the open loop drive. As already mentioned the current controller either provides current limits or closed loop torque control by modifying the drive output frequency. The control loop is also used in its torque mode during line power supply loss, or when the controlled mode standard ramp is active and the drive is decelerating, to regulate the flow of current into the drive. Although the default settings have been chosen to give suitable gains for less demanding applications it may be necessary for the user to adjust the performance of the controller. The following is a guide to setting the gains for different applications.

Current limit operation:

The current limits will normally operate with an integral term only, particularly below the point where field weakening begins. The proportional term is inherent in the loop. The integral term must be increased enough to counter the effect of the ramp which is still active even in current limit. For example, if the drive is operating at constant frequency and is overloaded the current limit system will try to reduce the output frequency to reduce the load. At the same time the ramp will try to increase the frequency back up to the demand level. If the integral gain is increased too far the first signs of instability will occur when operating around the point where field weakening begins. These oscillations can be reduced by increasing the proportional gain. A system has been included to prevent regulation because of the opposite actions of the ramps and the current limit. This can reduce the actual level that the current limit becomes active by 12.5%. This still allows the current to increase up to the current limit set by the user. However the current limit flag (Pr **10.09**) could become active up to 12.5% below the current limit depending on the ramp rate used.

Torque control:

Again the controller will normally operate with an integral term only, particularly below the point where field weakening begins. The first signs of instability will appear around base speed, and can be reduced by increasing the proportional gain. The controller can be less stable in torque control mode rather than when it is used for current limiting. This is because load helps to stabilise the controller, and under torque control the drive may operate with light load. Under current limit the drive is often under heavy load unless the current limits are set at a low level.

Line power supply loss and controlled standard ramp:

The DC bus voltage controller becomes active if line power supply loss detection is enabled and the drive supply is lost or controlled standard ramp is being used and the machine is regenerating. The DC bus controller attempts to hold the DC bus voltage at a fixed level by controlling the flow of current from the drive inverter into its DC bus capacitors. The output of the DC bus controller is a current demand which is fed into the current PI controller as shown in the following diagram.

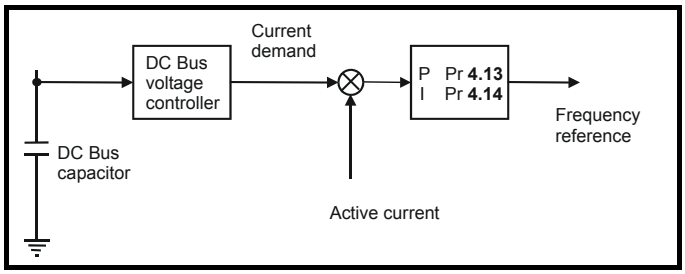

Although it is not usually necessary the DC bus voltage controller can be adjusted with Pr **5.31**. However, it may often be necessary to adjust the current controller gains to obtain the required performance. If the gains are not suitable it is best to set up the drive in torque control first. Set the gains to a value that does not cause instability around the point at which field weakening occurs. Then revert back to open loop speed control in standard ramp mode. To test the controller the supply should be removed while the motor is running. It is likely that the gains can be increased further if required because the DC bus voltage controller has a stabilising effect, provided that the drive is not required to operate in torque control mode.

RFC

The Kp and Ki gains are used in the voltage based current controller. The default values give satisfactory operation with most motors. However it may be necessary to change the gains to improve the performance. The proportional gain (Pr **4.13**) is the most critical value in controlling the performance. Either the value can be set by auto-tuning (see Pr **5.12**) or it can be set by the user so that

Pr **4.13** = Kp = (L / T) x (I_{fs} / V_{fs}) x (256 / 5)

Where:

T is the sample time of the current controllers. The drive compensates for any change of sample time, and so it should be assumed that the sample time is equivalent to the lowest sample rate of 167µs.

L is the motor inductance. For an induction motor this is the per phase transient inductance (σL_s). This is the inductance value stored in Pr **5.24** after the autotune test is carried out. If σL_s cannot be measured it can be calculated from the steady state per-phase equivalent circuit of the motor as follows:

$$\sigma L_s = L_s - \left(\frac{L_m^2}{L_r}\right)$$

I_{fs} is the peak full scale current feedback = K_C x √2 / 0.45. Where K_C is defined in Table 12-5.

V_{fs} is the maximum DC Bus voltage.

Therefore:

Pr **4.13** = Kp = (L / 167µs) x (K_C x √2 / 0.45 / V_{fs}) x (256 / 5)

= K x L x K_C

Where:

K = [√2 / (0.45 x V_{fs} x 167µs)] x (256 / 5)

Drive voltage rating	Vfs	K
200V	415V	2322
400V	830V	1161
575V	990V	973
690V	1190V	809

This set-up will give a step response with minimum overshoot after a step change of current reference. The approximate performance of the current controllers will be as given below. The proportional gain can be increased by a factor of 1.5 giving a similar increase in bandwidth, however, this gives at step response with approximately 12.5% overshoot.

Switching frequency kHz	Current control sample time µs	Gain bandwidth Hz	Phase delay µs
3	167	TBA	1160
4	125	TBA	875
6	83	TBA	581
8	125	TBA	625
12	83	TBA	415
16	125	TBA	625

The integral gain (Pr **4.14**) is less critical and should be set so that

Pr **4.14** = Ki = Kp x 256 x T / τ_m

Where:

τ_m is the motor time constant (L / R).

R is the per phase stator resistance of the motor (i.e. half the resistance measured between two phases).

Therefore

Pr **4.14** = Ki = (K x L x K_C) x 256 x 167µs x R / L

= 0.0427 x K x R x K_C

The above equation gives a conservative value of integral gain. In some applications where it is necessary for the reference frame used by the drive to dynamically follow the flux very closely (i.e. high speed applications) the integral gain may need to have a significantly higher value.

12.21.9 Catch a spinning motor

6.09	Catch a spinning motor								
RW	Uni							US	
OL	⇳	0 to 3			⇨	0			
RFC		0 to 1				1			

Open-loop

When the drive is enabled with this parameter at zero, the output frequency starts at zero and ramps to the required reference. When the drive is enabled with this parameter at a non-zero value, the drive performs a start-up test to determine the motor speed and then sets the initial output frequency to the synchronous frequency of the motor.

The test is not carried out and the motor frequency starts at zero if one of the following is true.

- The run command is given when the drive is in the stop state
- The drive is first enabled after power-up with Ur_I voltage mode (Pr **5.14** = Ur_I).
- The run command is given with Ur_S voltage mode (Pr **5.14** = Ur_S).

With default parameters the length of the test is approximately 250ms, however, if the motor has a long rotor time constant (usually large motors) it may be necessary to extend the test time. The drive will do this automatically if the motor parameters including the rated load rpm are set up correctly for the motor.

For the test to operate correctly it is important that the stator resistance (Pr **5.17** or Pr **21.12**) is set up correctly. This applies even if fixed boost (Pr **5.14** = Fd) or square law (Pr **5.14** = SrE) voltage mode is being used. The test uses the rated magnetising current of the motor during the test, therefore the rated current (Pr **5.07**, Pr **21.07** and Pr **5.10**, Pr **21.10**) and power factor should be set to values close to those of the motor, although these parameters are not as critical as the stator resistance. For larger motors it may be necessary to increase Pr **5.40** *Spin start boost* from its default value of 1.0 for the drive to successfully detect the motor speed.

It should be noted that a stationary lightly loaded motor with low inertia might move slightly during the test. The direction of the movement is undefined. Restrictions may be placed on the direction of this movement and on the frequencies detected by the drive as follows:

06.09	Function
0	Disabled
1	Detect all frequencies
2	Detect positive frequencies only
3	Detect negative frequencies only

RFC

When the drive is enabled with this bit at zero, the post ramp reference (Pr **2.01**) starts at zero and ramps to the required reference. When the drive is enabled with this bit at one, the post ramp reference is set to the motor speed.

If catch a spinning motor is not required, this parameter should be set to zero as this avoids unwanted movement of the motor shaft when zero speed is required. With larger motors it may be necessary to increase Pr **5.40** *Spin start boost* from its default value of 1.0 for the drive to successfully detect the motor speed.

12.21.10 Fast Disable

6.29	Hardware enable								
RO	Bit					NC	PT		
⇳	OFF (0) or On (1)				⇨				

This bit is a duplicate of parameter Pr **8.09** and reflects the state of the enable input. If the destination of one of the drive digital I/O (Pr **8.21** to Pr **8.26**) is set to Pr **6.29** and the I/O is set as an input, the state of the input does not affect the value of this parameter as it is protected, however, it does provide a fast disable function.

The Enable input to the drive (T31) disables the drive in hardware by removing the gate drive signals from the inverter IGBT's and also disables the drive via the software system. When the drive is disabled by de-activating the Enable input (T31) there can be a delay of up to 20ms (typically 8ms) before the drive is disabled. However, if a digital I/O is set up to provide the fast disable function it is possible to disable the drive within 600µs of de-activating the input. To do this an enable signal should be given to both the Enable input (T31) and to the digital I/O selected for the fast disable function. The state of the digital I/O including the effect of its associated invert parameter is ANDed with the Enable (T31) to enable the drive

12.21.11 Building automation interference

17.01	ID number								
RO	Uni						PT	US	
⇳	0 to 599				⇨				

The ID code for the building automation interface is 402.

17.02	Software version								
RO	Uni						PT	US	
⇳	0.00 to 99.99				⇨				

17.51	Software sub version								
RO	Uni					NC			
⇳	0 to 99				⇨				

Pr **17.02** and Pr **17.51** display the firmware version in the form xx.yy.zz, where xx.yy is Pr **17.02** and zz is Pr **17.51**.

17.03	MAC/Node address								
RW	Uni							US	
⇳	0 to 65535				⇨	0			

		Allowable MAC Address Values		
Protocol	**Master/ Slave**	**Minimum**	**Maximum**	**Broadcast**
Modbus RTU	Slave	1	247	0
BACnet	Master	0	127	255

If a MAC address is selected that is greater than or less than those allowed by the currently selected protocol, then the actual address used will be the maximum valid address value.

The Affinity drive is a BACnet master device and as such will instigate an I-Am broadcast message onto the BACnet network at power-up and on each subsequent drive reset.

17.04	Baud rate								
RW	Uni							US	
⇳	0 to 127				⇨	0			

This selects the baud rate used for network communication.

Pr 17.04 Value	Baud rate (bps)
0	Protocol default value (see table below)
1	1200
2	2400
3	4800
4	9600
5	19200
6	38400
7	57600
8	76800
>8	Protocol default value (see table below)

The default value when Pr **17.04** is set to 0 OR >8 is as follows:

Protocol	Default baud rate (bps)
Modbus RTU	9600
BACnet	19200

17.05	Building automation network protocol								
RW	Uni							US	
⇳	0 to 65535				⇨	0			

This selects the protocol used for the building automation network as follows:

17.05	Protocol
0	Disabled
1	Modbus RTU
2	BACnet

If a value greater than 2 is entered for Pr **17.05** then the building automation network is disabled.

17.06	Received message counter								
RO	Uni					NC	PT		
⇳	0 to $+2^{31}$ -1				⇨				

This parameter displays the number of valid messages that have been received using the currently selected building automation protocol. If the communications settings are configured correctly then this counter will count each time a message is received, therefore if the value remains constant then there is likely to be an error in either the configuration or the wiring to the communications port.

The received message counter is reset to in the following circumstances:

1. When another message is received after 32767 prior valid messages have been received.
2. Upon power up or after a drive reset

17.10	Device object identifier								
RW	Bi							US	
⇳	±32767				⇨	0			

BACnet use only

If this parameter is zero, then the MAC/Node address selected in Pr **17.03** will be used as the object identifier for the BACnet device; otherwise the device object identifier will be the value specified here.

If the node address is also set to zero then the device object identifier value will be set to 1.

17.35	CRC errors								
RO	Uni					NC	PT		
⇳	0 to 9999				⇨				

If an error is detected in the message header or message body then this count is incremented by one and the message disposed of.

This parameter should remain constant when the connection to the building automation network is operating correctly. If this parameter is increasing then the communications settings and wiring to the communications port should be verified.

The CRC error count is reset to zero in the following circumstances:

1. When another CRC error is detected after 9999 prior errors.
2. Upon power up or drive reset
3. After the last successfully received message

17.38	Data format								
RW	Bi							US	
⇳	0 to 255				⇨	0			

This selects the data transmission format used for the selected protocol.

Pr 17.38	Description			
	Start Bits	**Data Bits**	**Parity**	**Stop Bits**
0	Protocol default value			
1	1	8	None	1
2	1	8	None	2
3	1	8	Even	1
4	1	8	Odd	1
>4	Protocol default value			

The default value when Pr **17.38** is set to 0 OR >4 is as follows:

Protocol	Description			
	Start bits	**Data bits**	**Parity**	**Stop bits**
Modbus RTU	1	8	None	2
BACnet	1	8	None	2

17.39	Response turn-around time								
RW	Uni							US	
⇳	0 to 255 ms				⇨	5			

Modbus RTU only

There will always be a finite delay between the end of a message from the host (master) and the time at which the host is ready to receive the response from the drive (slave). The drive does not respond until at least 1ms after the message has been received from the host allowing 1ms for the host to change from transmit to receive mode. This initial delay can be extended using Pr **xx.39** if required.

Pr 17.39	Action
0	The transmitters are turned on and data transmission begins immediately after the initial delay (≥1ms).
1	The transmitters are turned on after the initial delay (≥1ms) and data transmission begins 1ms later.
2 or more	The transmitters are turned on after a delay of at least the time specified in Pr **xx.39** and data transmission begins 1ms later.

Modbus RTU uses a silent period detection system to detect the end of a message. This silent period is either the length of time for 3.5 characters at the present baud rate or the length of time set in Pr **17.39** whichever is the longest.

17.44	Real-time clock battery low								
RO	Uni					NC	PT		
⇳	0 to 255				⇨				

The real-time clock backup battery is checked upon power up and after a drive reset to determine if it should be changed. The conditions requiring battery replacement are when all power has been lost to the real-time clock while the drive was un-powered or that the battery voltage has fallen below 2.5Vdc.

If this parameter is 1 then the real-time clock backup battery should be replaced at the earliest opportunity.

The real-time clock will continue to operate as long as the drive remains powered. If the time-synchronisation features of BACnet are also being used then the user may never notice nor care that the battery has failed.

17.50	Error status								
RO	Uni					NC			
⇳	0 to 255				⇨				

If the Solutions Module detects a fault then the drive will trip with an SL3.Er trip. The source of the trip can then be discovered from the error code written into Pr **x.50**.

Possible error codes are shown in the table below:

Pr xx.50	Description
0	No error
10	Option module operating system error
20	Real-time clock error
30	IP54 cooling fan power supply fault
40	Drive to option module interface error
50	Building automation network error
74	Option module PCB over-temperature

12.21.12 BACnet objects

The tables in the following sections describe the BACnet objects that are available on the drive. The device object is also available.

Where the number of objects available is variable depending upon the Solutions Modules installed to the drive object identifiers are allocated in the following order:

1. Drive
2. Module in slot 1
3. Module in slot 2

The present value property of each of the objects can be accessed in the way indicated in the right-hand column of each of the object tables. The three access types are as follows:

Code	Type	Description
R	Read only	The present value of these objects can only be read
W	Read/write	The present value property of these objects can be both read from and written to. Writes from different BACnet devices will overwrite each other
C	Commanded	The present value property of these objects can be both read from and written to. Writes are accompanied by a priority level in the range 1 to 16, the underlying drive parameter is set to the value written at the highest priority level

The supported properties for each of the supported object types are given in the table below:

Object Property	Binary input	Binary output	Binary value	Analog input	Analog output	Analog value
Object_Identifer	✓	✓	✓	✓	✓	✓
Object_Name	✓	✓	✓	✓	✓	✓
Object_Type	✓	✓	✓	✓	✓	✓
Present_Value	✓	✓	✓	✓	✓	✓
Status_Flags	✓	✓	✓	✓	✓	✓
Event_State	✓	✓	✓	✓	✓	✓
Reliability	✓	✓	✓	✓	✓	✓
Out_Of_Service	✓	✓	✓	✓	✓	✓
Units				✓	✓	✓
Priority_Array		✓	✓		✓	✓
Relinquish_ Default		✓	✓		✓	✓
Polarity†	✓	✓				

† The polarity property is read-only for all objects that support it and can only be changed via the invert parameter associated with the input/ output represented by the object.

Analog input objects

Object ID (AI*n*)	Object name	Description	Units	Present value access mode
1	Drive analog input 1	Analog input 1 on drive (Pr **7.01**)	0.0%	R
2	Drive analog input 2	Analog input 2 on drive (Pr **7.02**)	0.0%	R
3	Drive analog input 3	Analog input 3 on drive (Pr **7.03**)	0.0%	R
4	Module x analog input 1	The first available analog input on a Solutions Module.	0.0%	R
↓	↓	↓	↓	↓
n	Module x analog input *n*	The nth available analog input on a Solutions Module	0.0%	R

Analog output objects

To control an analog output via BACnet the source parameter for the output must be set to a read/write parameter on menu 18. Pr **18.11** to Pr **18.30** are acceptable.

Object ID (AI*n*)	Object name	Description	Units	Present value access mode
1	Drive analog output 1	Analog output 1 on drive	0.0%	C
2	Drive analog output 2	Analog output 2 on drive	0.0%	C
3	Module x analog output 1	The first available analog output on a Solutions Module	0.0%	C
↓	↓	↓	↓	↓
n	Module x analog output 1	The first available analog output on a Solutions Module	0.0%	C

Analog value objects

Object ID (AV*n*)	Object name	Description	Units	Present value access mode
1	Drive parameter	The drive parameter to read/write	No units	W
2	Parameter value	The new value for the parameter, or the value read from the parameter	No units	W
3	Parameter read/write	Whether the parameter should be read or written (1 = write, 2 = read)	No units	W
4	Speed reference	The required output frequency/speed reference (Pr **1.21**)	Hz (OL) rpm (RFC)	C
5	Maximum speed reference	The maximum reference clamp value (Pr **1.06**)	Hz (OL) rpm (RFC)	W
6	Output current	Motor output current magnitude (Pr **4.01**)	A	R
7	Output torque	Motor output torque (Pr **4.20**) as a percentage of full load	%	R
8	Output frequency	Drive output frequency (Pr **5.01**)	Hz	R
9	Output speed	Motor speed (Pr **5.04**)	rpm	R
10	Output power	Drive output power (Pr **5.03**)	kW	R
11	Drive status word	Drive status word (Pr **10.40**)	No units	R
12	User trip parameter	User trip (Pr **10.38**)	On/Off	W
13	Last trip	Last drive trip (Pr **10.20**)	No units	R
14	Filter change (dt)	Time between filter changes (Pr **6.21**)	hr	W
15	Time to next filter change	Time before filter change due (Pr **6.23**)	hr	R
16	Energy meter (MWH)	Energy meter (MWh) (Pr **6.25**)	MWh	R
17	Energy meter (KWH)	Energy meter (kWh) (Pr **6.26**)	kWh	R
18	PID 1 digital reference	Digital reference for PID 1 (Pr **14.25**)	%	C
19	PID 1 digital feedback	Digital feedback for PID 1 (Pr **14.26**)	%	C
20	PID 1 reference	Sum of all reference inputs to PID 1 (Pr **14.20**)	%	R
21	PID 1 feedback	Sum of all feedback inputs to PID 1 (Pr **14.21**)	%	R
22	PID 1 output	The output from PID 1 (Pr **14.01**)	%	R
23	PID 2 digital reference	Digital reference for PID 2 (Pr **14.55**)	%	C
24	PID 2 digital feedback	Digital feedback for PID 2 (Pr **14.56**)	%	C
25	PID 2 reference	Sum of all reference inputs to PID 2 (Pr **14.50**)	%	R
26	PID 2 feedback	Sum of all feedback inputs to PID 2 (Pr **14.51**)	%	R
27	PID 2 output	The output from PID 2 (Pr **14.31**)	%	R

Binary input objects

Object ID (BIn)	Object name	Description	Present value access mode
1	Drive digital input 1	Digital input 1 on drive (bi-dir)	R
2	Drive digital input 2	Digital input 2 on drive (bi-dir)	R
3	Drive digital input 3	Digital input 3 on drive (bi-dir)	R
4	Drive digital input 4	Digital input 4 on drive	R
5	Drive digital input 5	Digital input 5 on drive	R
6	Drive digital input 6	Digital input 6 on drive	R
7	Drive digital input 7	SECURE DISABLE input	R
8	Module x digital input 1	The first available digital input on a Solutions Module	R
↓	↓	↓	↓
n	Module x digital input *n*	The nth available digital input on a Solutions Module	R

Binary output objects

To control a binary output via BACnet the source parameter for the output must be set to a read/write bit parameter on menu 18. Pr **18.31** to Pr **18.50** are acceptable.

Object ID (BOn)	Object name	Description	Present value access mode
1	Drive digital output 1	Digital output 1 on drive (bi-dir)	C
2	Drive digital output 2	Digital output 2 on drive (bi-dir)	C
3	Drive digital output 3	Digital output 3 on drive (bi-dir)	C
4	Drive digital output 4	24V Output	C
5	Drive digital output 5 (R)	Drive relay	C
6	Module x digital output 1	The first available digital output on a Solutions Module	C
↓	↓	↓	↓
n	Module x digital output *n*	The nth available digital output on a Solutions Module	C

Binary value objects

Object ID (BV)	Object name	Description	Present value access mode
1	Reset energy meter	Reset drive energy meter (Pr **6.17**)	W
2	Filter change required	Filter change required/done (Pr **6.19**)	W
3	Drive run forward	Run forward (Pr **6.30**)	C
4	Drive OK	Drive OK indication (Pr **10.01**)	R
5	Drive warning	Drive warning/alarm state (Pr **10.19**)	R
6	Drive reset	Drive reset (Pr **10.33**)	W

BACnet protocol implementation conformance statement

Date			15th May 2007		
Vendor Name			Control Techniques		
Product Name			Affinity Variable Speed Drive		
Product Model Number			Affinity (All models)		
Applications Software Version	n/a	**Firmware Revision**	V01.00.00	**BACnet Protocol Revision**	V01.02.00

BACnet Standardized Device Profile (Annex L)	☐	BACnet Operator Workstation (B_OWS)
	☐	BACnet Building Controller (B-BC)
	☐	BACnet Advanced Application Controller (B-AAC)
	☑	BACnet Application Specific Controller (B-ASC)
	☐	BACnet Smart Sensor (B-SS)
	☐	BACnet Smart Actuator (B-SA)
Supported BACnet Interoperability Building Blocks (Annex K)		DS-RP-B, DS-WP-B, DM-DDB-B, DM-DCC-B, DM-RD-B, DM-TS-B
Segmentation Capability	☐	Able to transmit segmented messages — Window Size _____
	☐	Able to receive segmented messages — Window Size _____
Standard Object Types Supported		See BACnet Objects section
Data Link Layer Options	☐	BACnet IP, (Annex J)
	☐	BACnet IP, (Annex J), Foreign Device
	☐	ISO 8802-3, Ethernet (Clause 7)
	☐	ANSI/ATA 878.1, 2.5Mb. ARCNET (Clause 8)
	☐	ANSI/ATA 878.1, EIA-485 ARCNET (Clause 8)
	☑	MS/TP master (Clause 9), baud rates : 1200, 2400, 4800, 9600, 19200, 38400, 57600, 76800
	☐	MS/TP slave (Clause 9), baud rates : 1200, 2400, 4800, 9600, 19200, 38400, 57600, 76800
	☐	Point-To-Point, EIA 232 (Clause 10)
	☐	Point-To-Point, modem (Clause 10)
	☐	LonTalk, (Clause 11)
	☐	Other
Device Address Binding Supported	☐	Yes ☑ No
Networking Options	☐	Router, Clause 6
	☐	Annex H, BACnet Tunnelling Router over IP
	☐	BACnet/IP Broadcast Management Device (BBMD) BBMD supports registration by Foreign Devices Yes ☐ No ☐

Character Sets Supported

Indicating support for multiple character sets does not imply that they can all be supported simultaneously

☑	ANSI X3.4	☐	IBM™/Microsoft™ DBCS	☐	ISO 8859-1
☐	ISO 10646 (UCS-2)	☐	ISO 10646 (UCS-4)	☐	JIS C 6226

13 Technical Data

13.1 Drive technical data

13.1.1 Power and current ratings (Derating for switching frequency and temperature)

For a full explanation of 'Normal Duty' and 'Heavy Duty' refer to section 2.3 *Ratings* on page 10.

Table 13-1 Maximum permissible continuous output current @ 40°C (104°F) ambient for wall mounted drives

Model	Normal Duty							
	Nominal rating		Maximum permissible continuous output current (A) for the following switching frequencies					
	kW	hp	3kHz	4kHz	6kHz	8kHz	12kHz	16kHz
BA1201	1.1	1.5	5.2					
BA1202	1.5	2.0	6.8					
BA1203	2.2	3.0	9.6					
BA1204	3.0	3.0	11.0					
BA2201	4.0	5.0	15.5					
BA2202	5.5	7.5	22.0					
BA2203	7.5	10	28.0			27.9	24.8	21.8
BA3201	11	15	42.0					
BA3202	15	20	54.0				48.5	
BA4201	18.5	25	68.0					
BA4202	22	30	80.0					
BA4203	30	40	104					
BA1401	1.1	1.5	2.8					
BA1402	1.5	2.0	3.8					
BA1403	2.2	3.0	5.0					
BA1404	3.0	5.0	6.9					5.9
BA1405	4.0	5.0	8.8				7.4	5.7
BA1406	5.5	7.5	11.0			10.0	7.4	5.7
BA2401	7.5	10	15.3				12.7	10.1
BA2402	11	15	21.0		19.5	16.7	12.7	10.0
BA2403	15	20	29.0	27.2	23.2	20.0	15.0	11.8
BA3401	18.5	25	35.0			34.5	26.3	21.0
BA3402	22	30	43.0			37.9	28.6	22.5
BA3403	30	40	56.0	53.4	44.6	37.9	28.6	
BA4401	37	50	68.0			62.0		
BA4402	45	60	83.0		74.0	63.0		
BA4403	55	75	104		95.1	78.8		
BA5401	75	100	138		118	97.1		
BA5402	90	125	168	158	129	107		
BA6401	110	150	205		164.1			
BA6402	132	200	236	210.4	157.7			
BA3501	3.0	3.0	5.4					
BA3502	4.0	5.0	6.1					
BA3503	5.5	7.5	8.4					
BA3504	7.5	10	11.0					
BA3505	11	15	16.0					
BA3506	15	20	22.0		21.6	18.2		
BA3507	18.5	25	27.0	26.0	21.6	18.1		
BA4601	18.5	25	22.0					
BA4602	22	30	27.0					
BA4603	30	40	36.0			33.9		
BA4604	37	50	43.0		41.3	33.7		
BA4605	45	60	52.0	51.9	41.2	33.7		
BA4606	55	75	62.0	61.3	48.4	39.6		
BA5601	75	100	84		69	54		
BA5602	90	125	99	91	69	54		
BA6601	110	150	125	100	74			
BA6602	132	175	144	100	74			

NOTE

For the definition of ambient temperature, see section 3.7 *Enclosure design and drive ambient temperature* on page 39.

Table 13-2 Maximum permissible continuous output current @ 40°C (104°F) ambient with IP54 insert and standard fan installed

Model	Normal Duty							
	Nominal rating		Maximum permissible continuous output current (A) for the following switching frequencies					
	kW	hp	3kHz	4kHz	6kHz	8kHz	12kHz	16kHz
BA1201	1.1	1.5	5.2					
BA1202	1.5	2.0	6.8					
BA1203	2.2	3.0	9.6			9.3	8.2	7.3
BA1204	3.0	3.0	11.0	10.6	9.7	9.0	7.7	6.6
BA2201	4.0	5.0	15.5					
BA2202	5.5	7.5	22.0			20.7	18.0	15.7
BA2203	7.5	10	24.5	23.7	22.0	20.5	17.9	15.6
BA1401	1.1	1.5	2.8					
BA1402	1.5	2.0	3.8					2.9
BA1403	2.2	3.0	5.0				3.9	2.9
BA1404	3.0	5.0	6.9		6.5	5.4	3.9	2.9
BA1405	4.0	5.0	8.3	7.3	5.8	4.7	3.2	2.3
BA1406	5.5	7.5	8.3	7.3	5.8	4.7	3.2	2.3
BA2401	7.5	10	15.3			13.3	10.1	7.9
BA2402	11	15	20.1	18.4	15.6	13.4	10.1	7.9
BA2403	15	20	21.7	19.7	16.4	13.9	10.2	7.7

NOTE

For the definition of ambient temperature, see section 3.7 *Enclosure design and drive ambient temperature* on page 39.

Table 13-3 Maximum permissible continuous output current @ 50°C (122°F) ambient for wall mounted drives

Model	Normal Duty							
	Nominal rating		Maximum permissible continuous output current (A) for the following switching frequencies					
	kW	hp	3kHz	4kHz	6kHz	8kHz	12kHz	16kHz
BA1201	1.1	1.5				5.2		
BA1202	1.5	2.0				6.8		
BA1203	2.2	3.0			9.6			9.0
BA1204	3.0	3.0		11.0		10.9	9.5	8.3
BA2201	4.0	5.0		15.5			13.5	11.5
BA2202	5.5	7.5	19.7	18.9	17.3	15.9	13.5	11.5
BA2203	7.5	10	19.5	18.6	17.2	15.8	13.4	11.5
BA3201	11	15		42.0			38.2	
BA3202	15	20	54.0		52.8	47.0	38.2	
BA4201	18.5	25		68.0				
BA4202	22	30		80.0				
BA4203	30	40		87.4				
BA1401	1.1	1.5				2.8		
BA1402	1.5	2.0				3.8		
BA1403	2.2	3.0			5.0			3.9
BA1404	3.0	5.0		6.9			5.1	3.9
BA1405	4.0	5.0	8.8		7.3	6.0	4.2	3.1
BA1406	5.5	7.5	10.1	9.0	7.3	6.0	4.2	3.1
BA2401	7.5	10	15.3	14.2	11.8	10.0	7.3	5.5
BA2402	11	15	15.7	14.2	11.8	10.0	7.3	5.5
BA2403	15	20	16.8	15.0	12.2	10.1	7.1	
BA3401	18.5	25	35.0		33.5	28.5	21.5	16.9
BA3402	22	30	43.0	41.5	34.2	28.7	21.0	16.0
BA3403	30	40	46.0	41.5	34.2	28.7	21.0	
BA4401	37	50	68.0		66.8	54.9		
BA4402	45	60	83.0	81.6	66.8	54.9		
BA4403	55	75	86.5	86.2	71.3	59.3		
BA5401	75	100	138		105.9	87.4		
BA5402	90	125	141	140	112	92		
BA6401	110	150	191.5	190.1	147.6			
BA6402	132	200	198.4	180.6	138.1			
BA3501	3.0	3.0		5.4				
BA3502	4.0	5.0		6.1				
BA3503	5.5	7.5		8.4				
BA3504	7.5	10		11.0				
BA3505	11	15		16.0		14.7		
BA3506	15	20	22.0		17.8	14.7		
BA3507	18.5	25	24.6	22.0	17.8	14.7		
BA4601	18.5	25		22.0				
BA4602	22	30		27.0		24.7		
BA4603	30	40	36.0		30.7	24.7		
BA4604	37	50	43.0	39.6	30.7	24.7		
BA4605	45	60	45.6	39.5	30.7	24.7		
BA4606	55	75	51.9	44.9	34.7	27.7		
BA5601	75	100	83	69	51	40		
BA5602	90	125	83	69	51	40		
BA6601	110	150	98	81	59			
BA6602	132	175	98	81	59			

NOTE

For the definition of ambient temperature, see section 3.7 *Enclosure design and drive ambient temperature* on page 39.

13.1.2 Power dissipation

Table 13-4 Losses @ 40°C (104°F) ambient for wall mounted drives

Model	Drive losses (W) taking into consideration any current derating for the given conditions							
	Normal Duty							
	Nominal rating		3kHz	4kHz	6kHz	8kHz	12kHz	16kHz
	kW	hp						
BA1201	1.1	1.5	33	35	38	42	49	56
BA1202	1.5	2.0	45	47	51	56	64	73
BA1203	2.2	3.0	67	70	76	81	92	104
BA1204	3.0	3.0	78	82	89	97	113	129
BA2201	4.0	5.0	155	161	173	186	210	235
BA2202	5.5	7.5	210	218	234	250	282	314
BA2203	7.5	10	272	282	302	320		315
BA3201	11	15	331	347	380	412	477	
BA3202	15	20	431	451	492	532	551	
BA4201	18.5	25	517	541	589	637		
BA4202	22	30	611	639	694	750		
BA4203	30	40	810	845	916	987		
BA1401	1.1	1.5	26	29	37	45	61	76
BA1402	1.5	2.0	34	38	48	57	76	95
BA1403	2.2	3.0	44	50	61	72	95	117
BA1404	3.0	5.0	62	69	83	97	126	134
BA1405	4.0	5.0	83	94	117	139	156	157
BA1406	5.5	7.5	106	120	147	158	156	157
BA2401	7.5	10	186	202	234	266	283	282
BA2402	11	15	248	269	291	286	283	281
BA2403	15	20	313	320			315	316
BA3401	18.5	25	364	392	449	499	477	465
BA3402	22	30	437	471	540	538	514	501
BA3403	30	40	567	580	552	533	510	
BA4401	37	50	714	781	914	956		
BA4402	45	60	882	961	995	970		
BA4403	55	75	1070	1158	1217	1144		
BA5401	75	100	1471	1618	1640	1560		
BA5402	90	125	1830	1881	1781	1717		
BA6401	110	150	2058	2259	2153			
BA6402	132	200	2477	2455	2255			
BA3501	3.0	3.0	127	141	168	196		
BA3502	4.0	5.0	135	150	180	209		
BA3503	5.5	7.5	163	181	218	254		
BA3504	7.5	10	197	219	263	306		
BA3505	11	15	267	296	354	412		
BA3506	15	20	362	399	475	471		
BA3507	18.5	25	448	486	477	471		
BA4601	18.5	25	409	470	590	711		
BA4602	22	30	496	568	712	857		
BA4603	30	40	660	754	941	1063		
BA4604	37	50	798	908	1083	1058		
BA4605	45	60	985	1115	1080	1058		
BA4606	55	75	1060	1179	1130	1105		
BA5601	75	100	1818	2129	2258	2203		
BA5602	90	125	2176	2320	2215	2189		
BA6601	110	150	2573	2512	2438			
BA6602	132	175	3106	2512	2438			

Table 13-5 Losses @ 40°C (104°F) ambient with IP54 insert and standard fan installed

Model	Drive losses (W) taking into consideration any current derating for the given conditions							
	Normal Duty							
	Nominal rating		3kHz	4kHz	6kHz	8kHz	12kHz	16kHz
	kW	hp						
BA1201	1.1	1.5	33	35	38	42	49	56
BA1202	1.5	2.0	45	47	51	56	64	73
BA1203	2.2	3.0	67	70	76	78		
BA1204	3.0	3.0	78					
BA2201	4.0	5.0	155	161	173	186	210	235
BA2202	5.5	7.5	210	218	234	237		
BA2203	7.5	10	237					
BA1401	1.1	1.5	26	29	37	45	61	76
BA1402	1.5	2.0	34	38	48	57	76	78
BA1403	2.2	3.0	44	50	61	72	78	
BA1404	3.0	5.0	62	69	78			
BA1405	4.0	5.0	78					
BA1406	5.5	7.5	78					
BA2401	7.5	10	186	202	234	237		
BA2402	11	15	237					
BA2403	15	20	237					

Table 13-6 Losses @ 50°C (122°F) ambient for wall mounted drives

Model	Drive losses (W) taking into consideration any current derating for the given conditions							
	Normal Duty							
	Nominal rating		3kHz	4kHz	6kHz	8kHz	12kHz	16kHz
	kW	hp						
BA1201	1.1	1.5	33	35	38	42	49	56
BA1202	1.5	2.0	45	47	51	56	64	73
BA1203	2.2	3.0	67	70	76	81	92	97
BA1204	3.0	3.0	78	82	89	97		
BA2201	4.0	5.0	155	161	173	186	190	
BA2202	5.5	7.5	190					
BA2203	7.5	10	190					
BA3201	11	15	331	347	380	412	436	
BA3202	15	20	431	451	480	463	439	
BA4201	18.5	25	517	541	589	637		
BA4202	22	30	611	639	694	750		
BA4203	30	40	671	701	761	821		
BA1401	1.1	1.5	26	29	37	45	61	76
BA1402	1.5	2.0	34	38	48	57	76	95
BA1403	2.2	3.0	44	50	61	72	95	97
BA1404	3.0	5.0	62	69	83	97		
BA1405	4.0	5.0	83	94	97			
BA1406	5.5	7.5	97					
BA2401	7.5	10	186	190				
BA2402	11	15	190					
BA2403	15	20	190					
BA3401	18.5	25	364	392	430	417	399	389
BA3402	22	30	437	455	435	418	399	388
BA3403	30	40	474	459	429	415	397	
BA4401	37	50	714	781	898	852		
BA4402	45	60	882	944	898	852		
BA4403	55	75	877	949	912	875		
BA5401	75	100	1471	1616	1462	1411		
BA5402	90	125	1500	1644	1543	1480		
BA6401	110	150	1942	2118	1939			
BA6402	132	200	2068	2108	1997			
BA3501	3.0	3.0	127	141	168	196		
BA3502	4.0	5.0	135	150	180	209		
BA3503	5.5	7.5	163	181	218	254		
BA3504	7.5	10	197	219	263	306		
BA3505	11	15	267	296	354	383		
BA3506	15	20	362	399	390	384		
BA3507	18.5	25	405	399	390	384		
BA4601	18.5	25	409	470	590	711		
BA4602	22	30	496	568	712	789		
BA4603	30	40	660	754	805	789		
BA4604	37	50	798	831	805	789		
BA4605	45	60	850	831	805	789		
BA4606	55	75	871	848	816	797		
BA5601	75	100	1785	1743	1689	1657		
BA5602	90	125	1785	1743	1688	1657		
BA6601	110	150	2084	2036	1978			
BA6602	132	175	2084	2036	1978			

Table 13-7 Power losses from the front of the drive when through-panel mounted

Frame size	Power loss
1	≤50W
2	≤75W
3	≤100W
4	≤204W
5	≤347W
6	≤480W

13.1.3 Supply requirements

Voltage:

BAx2xx 200V to 240V ±10%
BAx4xx 380V to 480V ±10%
BAx5xx 500V to 575V ±10%
BAx6xx 500V to 690V ±10%

Number of phases: 3

Maximum supply imbalance: 2% negative phase sequence (equivalent to 3% voltage imbalance between phases).

Frequency range: 48 to 65 Hz

For UL compliance only, the maximum supply symmetrical fault current must be limited to 100kA

Size 6 heatsink fan supply requirements

Nominal voltage:	24V
Minimum voltage:	23.5V
Maximum voltage:	27V
Current drawn:	3.3A
Recommended power supply:	24V, 100W, 4.5A
Recommended fuse:	4A fast blow (I^2t less than $20A^2s$)

13.1.4 Line reactors

Input line reactors reduce the risk of damage to the drive resulting from poor phase balance or severe disturbances on the supply network.

Where line reactors are to be used, reactance values of approximately 2% are recommended. Higher values may be used if necessary, but may result in a loss of drive output (reduced torque at high speed) because of the voltage drop.

For all drive ratings, 2% line reactors permit drives to be used with a supply unbalance of up to 3.5% negative phase sequence (equivalent to 5% voltage imbalance between phases).

Severe disturbances may be caused by the following factors, for example:

- Power factor correction equipment connected close to the drive.
- Large DC drives having no or inadequate line reactors connected to the supply.
- Across the line (DOL) started motor(s) connected to the supply such that when any of these motors are started, the voltage dip exceeds 20%

Such disturbances may cause excessive peak currents to flow in the input power circuit of the drive. This may cause nuisance tripping, or in extreme cases, failure of the drive.

Drives of low power rating may also be susceptible to disturbance when connected to supplies with a high rated capacity.

Line reactors are particularly recommended for use with the following drive models when one of the above factors exists, or when the supply capacity exceeds 175kVA:

BA1201 BA1202 BA1203 BA1204
BA1401 BA1402 BA1403 BA1404

Model sizes BA1405 to BA4606 have an internal DC choke and BA5201 to BA6602 have internal AC line chokes, so they do not require AC line reactors except for cases of excessive phase unbalance or extreme supply conditions.

When required each drive must have its own reactor(s). Three individual reactors or a single three-phase reactor should be used.

Reactor current ratings

The current rating of the line reactors should be as follows:

Continuous current rating:
Not less than the continuous input current rating of the drive

Repetitive peak current rating:
Not less than twice the continuous input current rating of the drive

13.1.5 Motor requirements

No. of phases: 3

Maximum voltage:
Affinity (200V): 240V
Affinity (400V): 480V
Affinity (575V): 575V
Affinity (690V): 690V

13.1.6 Temperature, humidity and cooling method

Ambient temperature operating range:
0°C to 50°C (32°F to 122°F).
Output current derating must be applied at ambient temperatures >40°C (104°F).

Minimum temperature at power-up:
-15°C (5°F), the supply must be cycled when the drive has warmed up to 0°C (32°F).

Cooling method: Forced convection

Maximum humidity: 95% non-condensing at 40°C (104°F)

13.1.7 Storage

-40°C (-40°F) to +50°C (122°F) for long term storage, or to +70°C (158°F) for short term storage.

13.1.8 Altitude

Altitude range: 0 to 3,000m (9,900 ft), subject to the following conditions:

1,000m to 3,000m (3,300 ft to 9,900 ft) above sea level: de-rate the maximum output current from the specified figure by 1% per 100m (330 ft) above 1,000m (3,300 ft)

For example at 3,000m (9,900ft) the output current of the drive would have to be de-rated by 20%.

13.1.9 Environmental Protection Rating

The standard drives are rated to IP20/NEMA1. Drive sizes 1 to 3 conform to UL Type 1 and sizes 4 to 6 are Open Class. If the optional conduit box is installed (see section 3.5 *Mounting methods* on page 25), then sizes 4 to 6 conform to UL Type 1.

The E12/E54 drives are rated to IP54/NEMA12 and conform to UL Type 12.

The standard drive can be configured to increase its protection rating to IP54/NEMA 12 for through-panel mounting (refer to section 3.8 *Enclosing standard drive for high environmental protection* on page 40).

The IP rating of a product is a measure of protection against ingress and contact to foreign bodies and water. It is stated as IP XX, where the two digits (XX) indicate the degree of protection provided as shown in Table 13-8.

Table 13-8 IP Rating degrees of protection

First digit		Second digit	
Protection against contact and ingress of foreign bodies		Protection against ingress of water	
0	No protection	0	No protection
1	Protection against large foreign bodies ϕ > 50mm (large area contact with the hand)	1	-
2	Protection against medium size foreign bodies ϕ > 12mm (finger)	2	-
3	Protection against small foreign bodies ϕ > 2.5mm (tools, wires)	3	Protection against spraywater (up to 60° from the vertical)
4	Protection against granular foreign bodies ϕ > 1mm (tools, wires)	4	Protection against splashwater (from all directions)
5	Protection against dust deposit, complete protection against accidental contact.	5	Protection against heavy splash water (from all directions, at high pressure)
6	Protection against dust ingress, complete protection against accidental contact.	6	Protection against deckwater (e.g. in heavy seas)
7	-	7	Protection against immersion
8	-	8	Protection against submersion

Table 13-9 UL / NEMA enclosure ratings

UL Type / NEMA rating	Description
1	Enclosures are intended for indoor use, primarily to provide a degree of protection against limited amounts of falling dirt.
12	Enclosures are intended for indoor use, primarily to provide a degree of protection against dust, falling dirt and dripping non-corrosive liquids.

13.1.10 Corrosive gasses

Concentrations of corrosive gases must not exceed the levels given in:

- Table A2 of EN 50178
- Class 3C1 of IEC 60721-3-3

This corresponds to the levels typical of urban areas with industrial activities and/or heavy traffic, but not in the immediate neighbourhood of industrial sources with chemical emissions.

13.1.11 Vibration

Bump Test

Testing in each of three mutually perpendicular axes in turn.

Referenced standard:	IEC 60068-2-29: Test Eb:
Severity:	18g (size 1 to 3), 6ms, half sine 10g (size 4 to 6), 6ms, half sine
No. of Bumps:	600 (100 in each direction of each axis)

Random Vibration Test

Testing in each of three mutually perpendicular axes in turn.

Referenced standard:	IEC 60068-2-64: Test Fh:
Severity:	1.0 m^2/s^3 (0.01 g^2/Hz) ASD from 5 - 20 Hz -3 dB/octave from 20 to 200 Hz
Duration:	30 minutes in each of 3 mutually perpendicular axes.

Sinusoidal Vibration Test

Testing in each of three mutually perpendicular axes in turn.

Referenced standard:	IEC 60068-2-6: Test Fc:
Frequency range:	5 - 500 Hz
Severity:	3.5 mm peak displacement from 5 to 9 Hz 10 m/s^2 peak acceleration from 9 to 200 Hz 15 m/s^2 peak acceleration from 200 to 500 Hz
Sweep rate:	1 octave/minute
Duration:	15 minutes in each of 3 mutually perpendicular axes.

13.1.12 Starts per hour

By electronic control: unlimited

By interrupting the AC supply: ≤20 (equally spaced)

13.1.13 Start up time

This is the time taken from the moment of applying power to the drive, to the drive being ready to run the motor:

Sizes 1 to 6: 4s

13.1.14 Output frequency / speed range

Open-loop frequency range: 0 to 3,000Hz

RFC speed range: 0 to 40,000rpm

RFC frequency range: 0 to 1,250Hz*

*(Limit to ~400Hz for good performance)

13.1.15 Accuracy and resolution

Speed:

The absolute frequency and speed accuracy depends on the accuracy of the crystal used with the drive microprocessor. The accuracy of the crystal is 100ppm, and so the absolute frequency/speed accuracy is 100ppm (0.01%) of the reference, when a preset speed is used. If an analog input is used the absolute accuracy is further limited by the absolute accuracy of the analog input.

The following data applies to the drive only; it does not include the performance of the source of the control signals.

Open loop resolution:

Preset frequency reference: 0.1Hz
Precision frequency reference: 0.001Hz

RFC resolution

Preset speed reference: 0.1rpm
Precision speed reference: 0.001rpm
Analog input 1: 16bit plus sign
Analog input 2: 10bit plus sign

Current:

The resolution of the current feedback is 10bit plus sign. The typical accuracy of the current feedback is 2%.

13.1.16 Acoustic noise

The heatsink fan generates the majority of the acoustic noise produced by the drive. The heatsink fan on size 1 and 2 is a dual speed fan and on size 3 to 6 it is a variable speed fan. The drive controls the speed at which the fan runs based on the temperature of the heatsink and the drive's thermal model system. On size 4 to 6 the minimum speed of the heatsink fan is 0 rpm. The size 3 to 6 is also installed with a single speed fan to ventilate the capacitor bank.

Table 13-10 gives the acoustic noise produced by the drive for the heatsink fan running at the maximum and minimum speeds.

Table 13-10 Acoustic noise data for wall mounted drives

Size	Max speed SPL dBA @ 1m	Min speed dBA
1	48	28
2	54	35
3	56	43
4	53	
5	72	
6	72	

13.1.17 Overall dimensions

H Height including surface mounting brackets
W Width
D Projection forward of panel when surface mounted
F Projection forward of panel when through-panel mounted
R Projection rear of panel when through-panel mounted

Table 13-11 Overall wall mounted standard drive dimensions

Size	Dimension				
	H	W	D	F	R
1	386mm (15.197in)	100mm (3.937in)	219mm (8.622in)	139mm (5.472in)	≤80mm (3.150in)
2	389mm (15.315in)	155mm (6.102in)			
3		250mm (9.843in)	260mm (10.236in)	140mm (5.512in)	≤120mm (4.724in)
4	547mm (21.528in)	310mm (12.205in)	298mm (11.732in)	200mm (7.874in)	≤98mm (3.858in)
5	858mm (33.752in)				
6	1169mm (46.016in)				

Table 13-12 Overall wall mounted standard drive dimensions with conduit box installed

Size	Dimension		
	H	W	D
1	473mm (18.612in)	100mm (3.937in)	219mm (8.622in)
2	468mm (18.425in)	155mm (6.102in)	
3	551mm (21.698in)	250mm (9.843in)	260mm (10.236in)
4	839mm (33.046in)	310mm (12.205in)	298mm (11.732in)
5	1150mm (45.27in)		
6	1460mm (57.467in)		

Table 13-13 Overall E12/E54 drive dimensions

Size	Dimension		
	H	W	D
1	560.1mm (20.05in)	184.0mm (7.24in)	263.7mm (10.38in)
2	552.3mm (21.74in)	236.0mm (9.29in)	261.9mm (10.31in)
3	543.6mm (21.40in)	331.3mm (13.04in)	302mm (11.89in)

13.1.18 Weights

Table 13-14 Overall wall mounted drive weights

Size	Model	kg	lb
1	BA1201 to BA1204, BA1401 to BA1404	5	11.0
	BA1405 and BA1406	5.8	12.8
2	All	7	15.4
3	All	15	33.1
4	All	30	66.1
5	All	55	121.3
6	All	75	165.3

Table 13-15 Overall E12/E54 drive weights

Size	kg	lb
1	9	20
2	12	26.5
3	25	55

13.1.19 Input current, fuse and cable size ratings

The input current is affected by the supply voltage and impedance.

Typical input current

The values of typical input current are given to aid calculations for power flow and power loss.

The values of typical input current are stated for a balanced supply.

Maximum continuous input current

The values of maximum continuous input current are given to aid the selection of cables and fuses. These values are stated for the worst case condition with the unusual combination of stiff supply with bad balance. The value stated for the maximum continuous input current would only be seen in one of the input phases. The current in the other two phases would be significantly lower.

The values of maximum input current are stated for a supply with a 2% negative phase-sequence imbalance and rated at the maximum supply fault current given in Table 13-16.

Table 13-16 Supply fault current used to calculate maximum input currents

Model	Symmetrical fault level (kA)
All	100

Table 13-17 Size 1 to 3 input current, fuse and cable size ratings

Model	Typical input current	Maximum continuous input current	European cable size EN60204			USA cable size UL508C		
			Fuse rating IEC gG	Input	Output	Fuse rating Class CC <30A Class J >30A	Input	Output
	A	A	A	mm^2	mm^2	A	AWG	AWG
BA1201	7.1	9.5	10	1.5	1.0	10	14	18
BA1202	9.2	11.3	12	1.5	1.0	15	14	16
BA1203	12.5	16.4	20	4.0	1.0	20	12	14
BA1204	15.4	19.1	20	4.0	1.5	20	12	14
BA2201	13.4	18.1	20	4.0	2.5	20	12	14
BA2202	18.2	22.6	25	4.0	4.0	25	10	10
BA2203	24.2	28.3	32	6.0	6.0	30	8	8
BA3201	35.4	43.1	50	16	16	45	6	6
BA3202	46.8	54.3	63	25	25	60	4	4
BA1401	4.1	4.8	8	1.0	1.0	8	16	22
BA1402	5.1	5.8	8	1.0	1.0	8	16	20
BA1403	6.8	7.4	8	1.0	1.0	10	16	18
BA1404	9.3	10.6	12	1.5	1.0	15	14	16
BA1405	10	11	12	1.5	1.0	15	14	14
BA1406	12.6	13.4	16	2.5	1.5	15	14	14
BA2401	15.7	17	20	4.0	2.5	20	12	14
BA2402	20.2	21.4	25	4.0	4.0	25	10	10
BA2403	26.6	27.6	32	6.0	6.0	30	8	8
BA3401	34.2	36.2	40	10	10	40	6	6
BA3402	40.2	42.7	50	16	16	45	6	6
BA3403	51.3	53.5	63	25	25	60	4	4
BA3501	5.0	6.7	8	1.0	1.0	10	16	18
BA3502	6.0	8.2	10	1.0	1.0	10	16	16
BA3503	7.8	11.1	12	1.5	1.0	15	14	14
BA3504	9.9	14.4	16	2.5	1.5	15	14	14
BA3505	13.8	18.1	20	4.0	2.5	20	12	14
BA3506	18.2	22.2	25	4.0	4.0	25	10	10
BA3507	22.2	26.0	32	6.0	6.0	30	8.0	8.0

NOTE

Cable sizes are from IEC60364-5-52:2001 table A.52.C with correction factor for 40°C ambient of 0.87 (from table A52.14) for cable installation method B2 (multicore cable in conduit).

Cable size may be reduced if a different installation method is used, or if the ambient temperature is lower.

The recommended cable sizes above are only a guide. The mounting and grouping of cables affects their current-carrying capacity, in some cases smaller cables may be acceptable but in other cases a larger cable is required to avoid excessive temperature or voltage drop. Refer to local wiring regulations for the correct size of cables.

Table 13-18 Size 4, 5 and 6 input current, fuse and cable size ratings

Model	Typical input current	Maximum input current	Fuse option 1		Fuse option 2 semiconductor fuse in series with HRC fuse or breaker		Cable size			
			IEC class gR	North America: Ferraz HSJ	HRC IEC class gG UL class J	Semi-conductor IEC class aR	Input		Output	
	A	A	A	A	A	A	mm^2	AWG	mm^2	AWG
BA4203	94.5	99.9	125	125	125	200	70	1	70	1
BA4401	61.2	62.3	80	80	80	160	25	3	25	3
BA4402	76.3	79.6	110	110	100	200	35	2	35	2
BA4403	94.1	97.2	125	125	125	200	70	1	70	1
BA5401	126	131	200	175	160	200	95	2/0	95	2/0
BA5402	152	156	250	225	200	250	120	4/0	120	4/0
BA6401	206	215	250	250	250	315	2 x 70	2 x 2/0	2 x 70	2 x 2/0
BA6402	247	258	315	300	300	350	2 x 120	2 x 4/0	2 x 120	2 x 4/0
BA4601	23	26.5	63	60	32	125	4	10	4	10
BA4602	26.1	28.8	63	60	40	125	6	8	6	8
BA4603	32.9	35.1	63	60	50	125	10	8	10	8
BA4604	39	41	63	60	50	125	16	6	16	6
BA4605	46.2	47.9	63	60	63	125	16	6	16	6
BA4606	55.2	56.9	80	60	63	125	25	4	25	4
BA5601	75.5	82.6	125	100	90	160	35	2	35	2
BA5602	89.1	94.8	125	100	125	160	50	1	50	1
BA6601	128	139	160	175	150	315	2 x 50	2 x 1	2 x 50	2 x 1
BA6602	144	155	160	175	160	315	2 x 50	2 x 1	2 x 50	2 x 1

NOTE

Cable sizes are from IEC60364-5-52:2001 table A.52.C with correction factor for 40°C ambient of 0.87 (from table A52.14) for cable installation method B2 (multicore cable in conduit).

Cable size may be reduced if a different installation method is used, or if the ambient temperature is lower.

The recommended cable sizes above are only a guide. The mounting and grouping of cables affects their current-carrying capacity, in some cases smaller cables may be acceptable but in other cases a larger cable is required to avoid excessive temperature or voltage drop. Refer to local wiring regulations for the correct size of cables.

Inrush current

The drive will have an inrush current during power-up, the peak inrush is limited to the value shown below:

BA120X	18 A peak
BA140X	35 A peak
BA220X	12 A peak
BA240X	24 A peak
BA320X	8 A peak
BA340X	14 A peak
BA350X	18 A peak
BA420X	73 A peak
BA4401	37 A peak
BA4402 and BA4403:	73 A peak
BA460X	35 A peak
BA540X	110 A peak
BA560X	70 A peak
BA640X	
BA660X	

NOTE

The inrush current for all drives after a brown-out can be larger than the power-up inrush.

13.1.20 Maximum motor cable lengths

Table 13-19 Maximum motor cable lengths (200V drives)

Model	200V Nominal AC supply voltage: Maximum permissible motor cable length for each of the following frequencies					
	3kHz	4kHz	6kHz	8kHz	12kHz	16kHz
BA1201	65m (210ft)				50m (165ft)	37m (120ft)
BA1202	100m (330ft)			75m (245ft)		
BA1203	130m (425ft)		100m (330ft)			
BA1204	200m (660ft)	150m (490ft)				
BA2201						
BA2202						
BA2203						
BA3201						
BA3202						
BA4201	250m (820ft)	185m (607ft)	125m (410ft)	90m (295ft)		
BA4202						
BA4203						

Table 13-20 Maximum motor cable lengths (400V drives)

400V Nominal AC supply voltage						
Model	**Maximum permissible motor cable length for each of the following frequencies**					
	3kHz	**4kHz**	**6kHz**	**8kHz**	**12kHz**	**16kHz**
BA1401	65m (210ft)					
BA1402	100m (330ft)					
BA1403	130m (425ft)					
BA1404	200m (660ft)	150m (490ft)	100m (330ft)	75m (245ft)	50m (165ft)	37m (120ft)
BA1405						
BA1406						
BA2401						
BA2402						
BA2403						
BA3401						
BA3402						
BA3403						
BA4401	250m (820ft)	185m (607ft)	125m (410ft)	90m (295ft)		
BA4402						
BA4403						
BA5401						
BA5402						
BA6401						
BA6402						

Table 13-21 Maximum motor cable lengths (575V drives)

575V Nominal AC supply voltage						
Model	**Maximum permissible motor cable length for each of the following frequencies**					
	3kHz	**4kHz**	**6kHz**	**8kHz**	**12kHz**	**16kHz**
BA3501	200m (660ft)	150m (490ft)	100m (330ft)	75m (245ft)		
BA3502						
BA3503						
BA3504						
BA3505						
BA3506						
BA3507						

Table 13-22 Maximum motor cable lengths (690V drives)

690V Nominal AC supply voltage						
Model	**Maximum permissible motor cable length for each of the following frequencies**					
	3kHz	**4kHz**	**6kHz**	**8kHz**	**12kHz**	**16kHz**
BA4601	250m (820ft)	185m (607ft)	125m (410ft)	90m (295ft)		
BA4602						
BA4603						
BA4604						
BA4605						
BA4606						
BA5601						
BA5602						
BA6601						
BA6602						

- Cable lengths in excess of the specified values may be used only when special techniques are adopted; refer to the supplier of the drive.

The default switching frequency is 3kHz for Open-loop and RFC. The maximum cable length is reduced from that shown in Table 13-19 and Table 13-20 if high capacitance motor cables are used. For further information, refer to section *High-capacitance cables* on page 60.

13.1.21 Braking resistor values

Table 13-23 Minimum resistance values and peak power rating for the braking resistor at 40°C (104°F)

Model	Minimum resistance* Ω	Instantaneous power rating kW
BA1201 to 1203	43	3.5
BA1204	29	5.3
BA2201 to BA2203	18	8.9
BA3201 to BA3202	5	30.3
BA4201 to BA4203	5	30.3
BA1401 to BA1404	74	8.3
BA1405 to BA1406	58	10.6
BA2401 to BA2403	19	33.1
BA3401 to BA3403	18	35.5
BA4401 to BA4402	11	55.3
BA4403	9	67.6
BA5401 to BA5402	7	86.9
BA6401 to BA6402	5	121.7
BA3501 to BA3507	18	50.7
BA4601 to BA4606	13	95
BA5601 to BA5602	10	125.4
BA6601 to BA6602	10	125.4

* Resistor tolerance: ±10%

13.1.22 Torque settings

Table 13-24 Drive control and relay terminal data

Model	Connection type	Torque setting
All	Plug-in terminal block	0.5 N m 0.4 lb ft

Table 13-25 Wall mounted drive power terminal data

Model size	AC terminals	High current DC and braking	Low voltage DC	Ground terminal
1	Plug-in terminal block 1.5 N m (1.1 lb ft)	Terminal block (M4 screws) 1.5 N m (1.1 lb ft)		Stud (M5) 4.0 N m 2.9 lb ft
2		Terminal block (M5 screws) 1.5 N m (1.1 lb ft)	Terminal block (M4 screws) 1.5 N m (1.1 lb ft)	
3	Terminal block (M6 screws) 2.5 N m 1.8 lb ft			6.0 N m 4.4 lb ft
4	M10 stud 15 N m (11.1 lb ft)			M10 stud 15 N m (11.1 lb ft)
5				
6				
Torque tolerance				±10%

13.1.23 Electromagnetic compatibility (EMC)

This is a summary of the EMC performance of the drive. For full details, refer to the *EMC Data Sheet* which can be obtained from the supplier of the drive.

Table 13-26 Immunity compliance

Standard	Type of immunity	Test specification	Application	Level
IEC61000-4-2 EN61000-4-2	Electrostatic discharge	6kV contact discharge 8kV air discharge	Module enclosure	Level 3 (industrial)
IEC61000-4-3 EN61000-4-3	Radio frequency radiated field	10V/m prior to modulation 80 - 1000MHz 80% AM (1kHz) modulation	Module enclosure	Level 3 (industrial)
IEC61000-4-4 EN61000-4-4	Fast transient burst	5/50ns 2kV transient at 5kHz repetition frequency via coupling clamp	Control lines	Level 4 (industrial harsh)
		5/50ns 2kV transient at 5kHz repetition frequency by direct injection	Power lines	Level 3 (industrial)
IEC61000-4-5 EN61000-4-5	Surges	Common mode 4kV 1.2/50µs waveshape	AC supply lines: line to ground	Level 4
		Differential mode 2kV 1.2/50µs waveshape	AC supply lines: line to line	Level 3
		Lines to ground	Signal ports to ground [1]	Level 2
IEC61000-4-6 EN61000-4-6	Conducted radio frequency	10V prior to modulation 0.15 - 80MHz 80% AM (1kHz) modulation	Control and power lines	Level 3 (industrial)
IEC61000-4-11 EN61000-4-11	Voltage dips and interruptions	-30% 10ms +60% 100ms -60% 1s <-95% 5s	AC power ports	
EN50082-1 IEC61000-6-1 EN61000-6-1	Generic immunity standard for the residential, commercial and light - industrial environment			Complies
EN50082-2 IEC61000-6-2 EN61000-6-2	Generic immunity standard for the industrial environment			Complies
EN61800-3 IEC61800-3 EN61800-3	Product standard for adjustable speed power drive systems (immunity requirements)		Meets immunity requirements for first and second environments	

[1] See section *Surge immunity of control circuits - long cables and connections outside a building* on page 70 for control ports for possible requirements regarding grounding and external surge protection

Emission

The drive contains an in-built filter for basic emission control. An additional optional external filter provides further reduction of emission. The requirements of the following standards are met, depending on the motor cable length and switching frequency.

Table 13-27 Size 1 emission compliance

Motor cable length (m)	Switching frequency (kHz)					
	3	4	6	8	12	16
Using internal filter:						
0 to 4	E2U	E2R				
>4	E2R					
Using internal filter and external ferrite ring:						
0 to 10	E2U			E2R		
> 10	E2R					
Using external filter:						
0 to 25	R			I		
25 to 75	I					
75 to 100	I					

Table 13-28 Size 2 emission compliance

Motor cable length (m)	Switching frequency (kHz)					
	3	4	6	8	12	16
Using internal filter:						
Any	E2R					
Using internal filter and external ferrite ring:						
0 to 4	E2U			E2R		
4 to 10	E2U	E2R				
> 10	E2R					
Using external filter:						
0 to 25	R			I		
25 to 75	I					
75 to 100	I					

Table 13-29 Size 3 emission compliance

Motor cable length (m)	Switching frequency (kHz)				
	3	4	6	8	12
Using internal filter:					
Any	E2R				
Using external filter:					
0 to 20	R	I			
20 to 50	I				
50 to 75	I				
75 to 100	I				

Table 13-30 Size 4 (200V & 400V) emission compliance

Motor cable length (m)	Switching frequency (kHz)			
	3	4	6	8
Using internal filter:				
Any	E2R			
Using external filter:				
0 to 25	I			
25 to 50	I			
50 to 75	I	E2U		
75 to 100	I	E2U		

Table 13-31 Size 4 (690V) emission compliance

Motor cable length (m)	Switching frequency (kHz)			
	3	4	6	8
Using internal filter:				
Any	E2R			
Using external filter:				
0 to 25	I			
25 to 50	I		E2U	
50 to 75	I		E2U	
75 to 100	I		E2U	

Table 13-32 Size 5 (400V) emission compliance

Motor cable length (m)	Switching frequency (kHz)			
	3	4	6	8
Using internal filter:				
100	E2U			
Using external filter:				
0 to 100	I			

Table 13-33 Size 5 (690V) emission compliance

Motor cable length (m)	Switching frequency (kHz)			
	3	4	6	8
Using internal filter:				
100	E2R			
Using external filter:				
0 to 25	I			
0 to 100	I			

Table 13-34 Size 6 (400V only) emission compliance

Motor cable length (m)	Switching frequency (kHz)		
	3	4	6
Using internal filter:			
0 to 100	E2U		
100 to max*	E2R		
Using external filter:			
0 to 100	I		

*See user guide for maximum permitted length

Table 13-35 Size 6 (690V only) emission compliance

Motor cable length (m)	Switching frequency (kHz)		
	3	4	6
Using internal filter:			
0 to 100	E2U		
100 to max*	E2R		
Using external filter:			
0 to 25	I		
0 to 100	I	Do not use	

*See user guide for maximum permitted length

Key (shown in decreasing order of permitted emission level):

E2R EN 61800-3 second environment, restricted distribution (Additional measures may be required to prevent interference)

E2U EN 61800-3 second environment, unrestricted distribution

I Industrial generic standard EN 50081-2 (EN 61000-6-4) EN 61800-3 first environment restricted distribution (The following caution is required by EN 61800-3)

CAUTION

This is a product of the restricted distribution class according to IEC 61800-3. In a residential environment this product may cause radio interference in which case the user may be required to take adequate measures.

R Residential generic standard EN 50081-1 (EN 61000-6-3) EN 61800-3 first environment unrestricted distribution

EN 61800-3 defines the following:

- The first environment is one that includes domestic premises. It also includes establishments directly connected without intermediate transformers to a low-voltage power supply network which supplies buildings used for domestic purposes.
- The second environment is one that includes all establishments other than those directly connected to a low-voltage power supply network which supplies buildings used for domestic purposes.
- Restricted distribution is defined as a mode of sales distribution in which the manufacturer restricts the supply of equipment to suppliers, customers or users who separately or jointly have technical competence in the EMC requirements of the application of drives.

13.2 Optional external EMC filters

Table 13-36 EMC filter cross reference

Drive	Schaffner	Epcos
	CT part no.	CT part no.
BA1201 to BA1202	4200-6118	4200-6121
BA1203 to BA1204	4200-6119	4200-6120
BA2201 to BA2203	4200-6210	4200-6211
BA3201 to BA3202	4200-6307	4200-6306
BA4201 to BA4203	4200-6406	4200-6405
BA1401 to BA1404	4200-6118	4200-6121
BA1405 to BA1406	4200-6119	4200-6120
BA2401 to BA2403	4200-6210	4200-6211
BA3401 to BA3403	4200-6305	4200-6306
BA4401 to BA4403	4200-6406	4200-6405
BA5401 to BA5402	4200-6503	4200-6501
BA6401 to BA6402	4200-6603	4200-6601
BA3501 to BA3507	4200-6309	4200-6308
BA4601 to BA4606	4200-6408	4200-6407
BA5601 to BA5602	4200-6504	4200-6502
BA6601 to BA6602	4200-6604	4200-6602

13.2.1 EMC filter ratings

Table 13-37 Optional external EMC filter details

CT part number	Manufacturer	Maximum continuous current		Voltage rating	IP rating	Power dissipation at rated current	Ground leakage		Discharge resistors
		@ 40°C (104°F) A	@ 50°C (122°F) A	V		W	Balanced supply phase-to-phase and phase-to-ground mA	Worst case mA	
4200-6118	Schaffner	10	10	480	20	6.9	29.4	153	See Note 1
4200-6119		16	16			9.2	38.8	277	
4200-6210		32	28.2			11	38.0	206	
4200-6305		62	56.6			23	66.0	357	
4200-6307		75	68.5	240		29	24.0	170	
4200-6309		30	30	575		15	102.0	557	See Note 3
4200-6406		101	92.2	480		25	73.0	406	See Note 1
4200-6408		58	52.8	690		31	66.0	344	
4200-6503		164	150	480		30	39.1	216	See Note 4
4200-6504		95	86.7	690		30	66.0	344	See Note 1
4200-6603		260	237	480	00	14.2	41.0	219	
4200-6604		160	146	690		5.4	88.5	296	
4200-6121	Epcos	10	9.1	480	20	4.2	<30.0	186.5	See Note 2
4200-6120		16	14.6			10.8			
4200-6211		32	29.1			17.8			
4200-6306		75	68.3			19.4		238	
4200-6308		30	22.5	660		17.6	<35.0	230	
4200-6405		101	75	480		30	<30.0	180	
4200-6407		58	44	690		15	<40.0	<340	See Note 5
4200-6501		165	125	480		27	<20.0	<120	See Note 2
4200-6502		95	71	690		19	<55.0	<450	See Note 5
4200-6601		260	195	480	00	13	<45.0	<375	
4200-6602		160	120	690		5	<60.0	<520	

NOTE

1. 1MΩ in a ⅄ connection between phases, with the ⅄ point connected by a 680kΩ resistor to ground (i.e. line to line 2MΩ, line to ground 1.68MΩ)
2. 1MΩ in a ⅄ connection between phases, with the ⅄ point connected by a 1.5MΩ resistor to ground (i.e. line to line 2MΩ, line to ground 2.5MΩ)
3. 2MΩ between phases with each phase connected by a 660kΩ resistance to ground.
4. 1.5MΩ in a ⅄ connection between phases, with the ⅄ point connected by a 680kΩ resistor to ground (i.e. line to line 3MΩ, line to ground 2.18MΩ)
5. 1.8MΩ in a ⅄ connection between phases, with the ⅄ point connected by a 1.5MΩ resistor to ground (i.e. line to line 3.6MΩ, line to ground 3.3MΩ)

13.2.2 Overall EMC filter dimensions

Table 13-38 Optional external EMC filter dimensions

CT part number	Manufacturer	Dimension			Weight	
		H	W	D	kg	lb
4200-6118	Schaffner	440 mm (17.323 in)	100 mm (3.937 in)	45 mm (1.772in)	1.4	3.1
4200-6119						
4200-6210		428.5 mm (16.870 in)	155 mm (6.102 in)	55 mm (2.165 in)	2	4.4
4200-6305		414 mm (16.299 in)	250 mm (9.842 in)	60 mm (2.362 in)	3.5	7.7
4200-6307						
4200-6309						
4200-6406		300 mm (11.811 in)	225 mm (8.858 in)	100 mm (3.937 in)	4	8.8
4200-6408			208 mm (8.189 in)		3.8	8.4
4200-6503			249 mm (9.803 in)	120 mm (4.724 in)	6.8	15
4200-6504			225 mm (8.858 in)	100 mm (3.937 in)	4.4	9.7
4200-6603		295 mm (11.614 in)	230 mm (9.055 in)	136 mm (5.354 in)	5.25	11.6
4200-6604		357 mm (14.055 in)				
4200-6121	Epcos	450 mm (17.717 in)	100 mm (3.937 in)	45 mm (1.772 in)	2.1	4.6
4200-6120						
4200-6211		431.5 mm (16.988 in)	155 mm (6.102 in)	55 mm (2.165 in)	3.3	7.3
4200-6306		425 mm (16.732 in)	250 mm (9.843 in)	60 mm (2.362 in)	5.1	11.2
4200-6308						
4200-6405		300 mm (11.811 in)	207 mm (8.150 in)	90 mm (3.543 in)	7.8	17.2
4200-6407			205 mm (8.071 in)		8.0	17.6
4200-6501			249 mm (9.803 in)	120 mm (4.724 in)	12.0	26.5
4200-6502					10.0	22.0
4200-6601		364 mm (14.331 in)	230 mm (9.055 in)	147 mm (5.787 in)	8.6	19.0
4200-6602						

13.2.3 EMC filter torque settings

Optional external EMC Filter terminal data

CT part number	Manufacturer	Power connections		Ground connections	
		Max cable size	Max torque	Ground stud size	Max torque
4200-6118	Schaffner	4mm^2 12AWG	0.8 N m (0.6 lb ft)	M5	3.5 N m (2.6 lb ft)
4200-6119					
4200-6210		10mm^2 8AWG	2.0 N m (1.5 lb ft)		
4200-6305		16mm^2 6AWG	2.2 N m (1.6 lb ft)	M6	3.9 N m (2.9 lb ft)
4200-6307					
4200-6309					
4200-6406		50mm^2 0AWG	8 N m (5.9 lb ft)	M10	25 N m (18.4 lb ft)
4200-6408		25mm^2 4AWG	2.3 N m (1.7 lb ft)	M6	3.9 N m (2.9 lb ft)
4200-6503		95mm^2 4/0AWG	20 N m (14.7 lb ft)	M10	25 N m (18.4 lb ft)
4200-6504		50mm^2 0AWG	8 N m (5.9 lb ft)		
4200-6603					
4200-6604					
4200-6120	Epcos	4mm^2 12AWG	0.6 N m (0.4 lb ft)	M5	3.0 N m (2.2 lb ft)
4200-6121					
4200-6211		10mm^2 8AWG	1.35 N m (1.0 lb ft)		
4200-6306		16mm^2 6AWG	2.2 N m (1.6 lb ft)	M6	5.1 N m (3.8 lb ft)
4200-6308		10mm^2 8AWG	1.35 N m (1.0 lb ft)		
4200-6405		50mm^2 0AWG	6.8 N m (5.0 lb ft)	M10	10 N m (7.4 lb ft)
4200-6407					
4200-6501		95mm^2 4/0AWG	20 N m (14.7 lb ft)		
4200-6502					
4200-6601					
4200-6602					

14 Diagnostics

The display on the drive gives various information about the status of the drive. These fall into three categories:

- Trip indications
- Alarm indications
- Status indications

WARNING

Users must not attempt to repair a drive if it is faulty, nor carry out fault diagnosis other than through the use of the diagnostic features described in this chapter.
If a drive is faulty, it must be returned to an authorized Control Techniques distributor for repair.

14.1 Trip indications

If the drive trips, the output of the drive is disabled so that the drive stops controlling the motor. The display indicates that a trip has occurred and shows the trip. If this is a multi-module drive and a power module has indicated a trip, then the display will alternate between the trip string and the module number.

Trips are listed alphabetically in Table 14-1 based on the trip indication shown on the drive display. Refer to Figure 14-1.

If a display is not used, the drive LED Status indicator will flash if the drive has tripped. Refer to Figure 14-2.

The trip indication can be read in Pr **10.20** providing a trip number. Trip numbers are listed in numerical order in Table 14-2 so the trip indication can be cross referenced and then diagnosed using Table 14-1.

Example

1. Trip code 3 is read from Pr **10.20** via serial communications.
2. Checking Table 14-2 shows Trip 3 is an OI.AC trip.

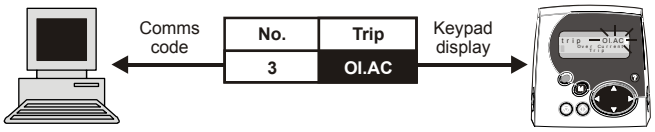

3. Look up OI.AC in Table 14-1.
4. Perform checks detailed under *Diagnosis*.

Figure 14-1 Keypad status modes

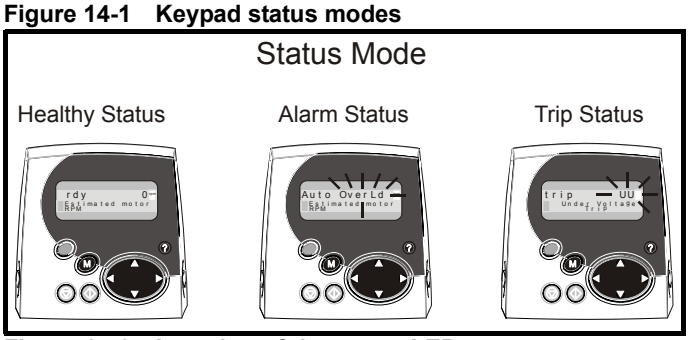

Figure 14-2 Location of the status LED

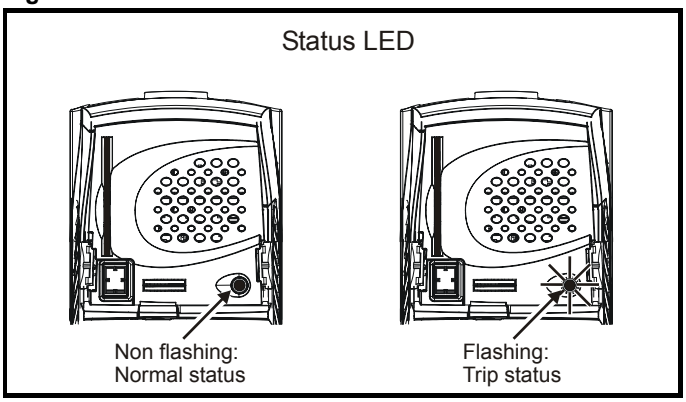

Trip	Diagnosis
OI.AC	**Instantaneous output over current detected: peak output current greater than 225%**
3	Acceleration / deceleration rate is too short. If seen during autotune reduce voltage boost Pr **5.15** Check for short circuit on output cabling Check integrity of motor insulation Is motor cable length within limits for that frame size? Reduce the values in speed loop gain parameters – Pr **3.10**, Pr **3.11** and Pr **3.12** (RFC mode) Reduce the values in current loop gain parameters - Pr **4.13** and Pr **4.14** (RFC mode)

Table 14-1 Trip indications

Trip	Diagnosis
C.Acc	**SMARTCARD trip: SMARTCARD Read / Write fail**
185	Check SMARTCARD is installed / located correctly Ensure SMARTCARD is not writing data to data location 500 to 999 Replace SMARTCARD
C.boot	**SMARTCARD trip: The menu 0 parameter modification cannot be saved to the SMARTCARD because the necessary file has not been created on the SMARTCARD**
177	A write to a menu 0 parameter has been initiated via the keypad with Pr **11.42** set to auto(3) or boot(4), but the necessary file on the SMARTCARD has not bee created Ensure that Pr **11.42** is correctly set and reset the drive to create the necessary file on the SMARTCARD Re-attempt the parameter write to the menu 0 parameter
C.bUSY	**SMARTCARD trip: SMARTCARD can not perform the required function as it is being accessed by a Solutions Module**
178	Wait for the Solutions Module to finish accessing the SMARTCARD and then re-attempt the required function
C.Chg	**SMARTCARD trip: Data location already contains data**
179	Erase data in data location Write data to an alternative data location
C.cPr	**SMARTCARD trip: The values stored in the drive and the values in the data block on the SMARTCARD are different**
188	Press the red reset button
C.dAt	**SMARTCARD trip: Data location specified does not contain any data**
183	Ensure data block number is correct
C.Err	**SMARTCARD trip: SMARTCARD data is corrupted**
182	Ensure the card is located correctly Erase data and retry Replace SMARTCARD
C.Full	**SMARTCARD trip: SMARTCARD full**
184	Delete a data block or use different SMARTCARD
cL2	**Analog input 2 current loss (current mode)**
28	Check analog input 2 (terminal 7) current signal is present (4-20mA, 20-4mA)
cL3	**Analog input 3 current loss (current mode)**
29	Check analog input 3 (terminal 8) current signal is present (4-20mA, 20-4mA)
CL.bit	**Trip initiated from the control word (Pr 6.42)**
35	Disable the control word by setting Pr **6.43** to 0 or check setting of Pr **6.42**
ConF.P	**The number of power modules installed no longer matches the value stored in Pr 11.35**
111	Ensure that all power modules are correctly connected Ensure that all power modules have powered up correctly Ensure that the value in Pr **11.35** matches the number of power modules connected
C.OPtn	**SMARTCARD trip: Solutions Modules installed are different between source drive and destination drive**
180	Ensure correct Solutions Modules are installed Ensure Solutions Modules are in the same Solutions Module slot Press the red reset button
C.Prod	**SMARTCARD trip: The data blocks on the SMARTCARD are not compatible with this product**
175	Erase all data on the SMARTCARD by setting Pr **xx.00** to 9999 and pressing the red reset button Replace SMARTCARD
C.rdo	**SMARTCARD trip: SMARTCARD has the Read Only bit set**
181	Enter 9777 in Pr **xx.00** to allow SMARTCARD Read / Write access Ensure card is not writing to data locations 500 to 999
br.th	**Braking resistor thermistor temperature monitoring fail**
10	Check thermistor connections

<table>
<tr><th>Trip</th><th>Diagnosis</th></tr>
<tr><td>C.rtg</td><td>SMARTCARD trip: The voltage and/or current rating of the source and destination drives are different</td></tr>
<tr><td>186</td><td>Drive rating dependent parameters (parameters with the RA coding) are likely to have different values and ranges with drives of different voltage and current ratings. Parameters with this attribute will not be transferred to the destination drive by SMARTCARDs when the rating of the destination drive is different from the source drive and the file is a parameter file. Drive rating dependent parameters will be transferred if only the current rating is different and the file is a differences from default type file.
Press the red reset button
Drive rating parameters are:
<table>
<tr><th>Parameter</th><th>Function</th></tr>
<tr><td>2.08</td><td>Standard ramp voltage</td></tr>
<tr><td>4.05/6/7, 21.27/8/9</td><td>Current limits</td></tr>
<tr><td>4.24</td><td>User current maximum scaling</td></tr>
<tr><td>5.07, 21.07</td><td>Motor rated current</td></tr>
<tr><td>5.09, 21.09</td><td>Motor rated voltage</td></tr>
<tr><td>5.10, 21.10</td><td>Rated power factor</td></tr>
<tr><td>5.17, 21.12</td><td>Stator resistance</td></tr>
<tr><td>5.18</td><td>Switching frequency</td></tr>
<tr><td>5.23, 21.13</td><td>Voltage offset</td></tr>
<tr><td>5.24, 21.14</td><td>Transient inductance</td></tr>
<tr><td>5.25, 21.24</td><td>Stator inductance</td></tr>
<tr><td>6.06</td><td>DC injection braking current</td></tr>
<tr><td>6.48</td><td>Line power supply loss ride through detection level</td></tr>
</table>
The above parameters will be set to their default values.</td></tr>
<tr><td>C.TyP</td><td>SMARTCARD trip: SMARTCARD parameter set not compatible with drive</td></tr>
<tr><td>187</td><td>Press the reset button
Ensure destination drive type is the same as the source parameter file drive type</td></tr>
<tr><td>dESt</td><td>Two or more parameters are writing to the same destination parameter</td></tr>
<tr><td>199</td><td>Set Pr xx.00 = 12001 check all visible parameters in the menus for duplication</td></tr>
<tr><td>EEF</td><td>EEPROM data corrupted - Drive mode becomes open loop and serial comms will timeout with remote keypad on the drive RS485 comms port.</td></tr>
<tr><td>31</td><td>This trip can only be cleared by loading default parameters and saving parameters</td></tr>
<tr><td>Et</td><td>External trip from input on terminal 31</td></tr>
<tr><td>6</td><td>Check terminal 31 signal
Check value of Pr 10.32
Enter 12001 in Pr xx.00 and check for parameter controlling Pr 10.32
Ensure Pr 10.32 or Pr 10.38 (=6) are not being controlled by serial comms</td></tr>
<tr><td>HF01</td><td>Data processing error: CPU address error</td></tr>
<tr><td></td><td>Hardware fault - return drive to supplier</td></tr>
<tr><td>HF02</td><td>Data processing error: DMAC address error</td></tr>
<tr><td></td><td>Hardware fault - return drive to supplier</td></tr>
<tr><td>HF03</td><td>Data processing error: Illegal instruction</td></tr>
<tr><td></td><td>Hardware fault - return drive to supplier</td></tr>
<tr><td>HF04</td><td>Data processing error: Illegal slot instruction</td></tr>
<tr><td></td><td>Hardware fault - return drive to supplier</td></tr>
<tr><td>HF05</td><td>Data processing error: Undefined exception</td></tr>
<tr><td></td><td>Hardware fault - return drive to supplier</td></tr>
<tr><td>HF06</td><td>Data processing error: Reserved exception</td></tr>
<tr><td></td><td>Hardware fault - return drive to supplier</td></tr>
<tr><td>HF07</td><td>Data processing error: Watchdog failure</td></tr>
<tr><td></td><td>Hardware fault - return drive to supplier</td></tr>
<tr><td>HF08</td><td>Data processing error: Level 4 crash</td></tr>
<tr><td></td><td>Hardware fault - return drive to supplier</td></tr>
</table>

Trip	Diagnosis
HF09	**Data processing error: Heap overflow**
	Hardware fault - return drive to supplier
HF10	**Data processing error: Router error**
	Hardware fault - return drive to supplier
HF11	**Data processing error: Access to EEPROM failed**
	Hardware fault - return drive to supplier
HF12	**Data processing error: Main program stack overflow**
	Hardware fault - return drive to supplier
HF13	**Data processing error: Software incompatible with hardware**
	Hardware or software fault - return drive to supplier
HF17	**Multi-module system thermistor short circuit or open circuit**
217	Hardware fault - return drive to supplier
HF18	**Multi-module system interconnect cable error**
218	Hardware fault - return drive to supplier
HF19	**Temperature feedback multiplexing failure**
219	Hardware fault - return drive to supplier
HF20	**Power stage recognition: serial code error**
220	Hardware fault - return drive to supplier
HF21	**Power stage recognition: unrecognised frame size**
221	Hardware fault - return drive to supplier
HF22	**Power stage recognition: multi module frame size mismatch**
222	Hardware fault - return drive to supplier
HF23	**Power stage recognition: multi module voltage rating mismatch**
223	Hardware fault - return drive to supplier
HF24	**Power stage recognition: unrecognised drive size**
224	Hardware fault - return drive to supplier
HF25	**Current feedback offset error**
225	Hardware fault - return drive to supplier
HF26	**Soft start relay failed to close, soft start monitor failed or braking IGBT short circuit at power up**
226	Hardware fault - return drive to supplier
HF27	**Power stage thermistor 1 fault**
227	Hardware fault - return drive to supplier
HF28	**Power stage thermistor 2 fault, or internal fan fault (size 3)**
228	Hardware fault - return drive to supplier
HF29	**Control board thermistor fault**
229	Hardware fault - return drive to supplier
HF30	**DCCT wire break trip from power module**
230	Hardware fault - return drive to supplier
HF31	**Internal capacitor bank fan failure (size 4 and larger) or a module has not powered up in a multi-module parallel drive**
231	Check the AC or DC power supply to all modules in a multi-module parallel drive If the AC or DC power supply is present then it is a hardware fault - return drive to the supplier
HF32	**Power stage - Identification and trip information serial code error**
232	Hardware fault - return drive to the supplier

Trip	Diagnosis
It.AC	**Output current overload timed out (I^2t) - accumulator value can be seen in Pr 4.19**
20	Ensure the load is not jammed / sticking Check the load on the motor has not changed Ensure rated speed parameter is correct (RFC)
It.br	**Braking resistor overload timed out (I^2t) – accumulator value can be seen in Pr 10.39**
19	Ensure the values entered in Pr **10.30** and Pr **10.31** are correct Increase the power rating of the braking resistor and change Pr **10.30** and Pr **10.31** If an external thermal protection device is being used and the braking resistor software overload is not required, set Pr **10.30** or Pr **10.31** to 0 to disable the trip
LOAD	**Low load detected**
39	Check mechanical motor coupling
O.CtL	**Drive control board over temperature**
23	Check enclosure / drive fans are still functioning correctly Check enclosure ventilation paths Check enclosure door filters Check ambient temperature Reduce drive switching frequency
O.ht1	**Power device over temperature based on thermal model**
21	Reduce drive switching frequency Reduce duty cycle Decrease acceleration / deceleration rates Reduce motor load
O.ht2	**Heatsink over temperature**
22	Check enclosure / drive fans are still functioning correctly Check enclosure ventilation paths Check enclosure door filters Increase ventilation Decrease acceleration / deceleration rates Reduce drive switching frequency Reduce duty cycle Reduce motor load
Oht2.P	**Power module heatsink over temperature**
105	Check enclosure / drive fans are still functioning correctly Check enclosure ventilation paths Check enclosure door filters Increase ventilation Decrease acceleration / deceleration rates Reduce drive switching frequency Reduce duty cycle Reduce motor load
O.ht3	**Drive over-temperature based on thermal model**
27	The drive will attempt to stop the motor before tripping. If the motor does not stop in 10s the drive trips immediately. Check enclosure / drive fans are still functioning correctly Check enclosure ventilation paths Check enclosure door filters Increase ventilation Decrease acceleration / deceleration rates Reduce duty cycle Reduce motor load
Oht4.P	**Power module rectifier over temperature or input snubber resistor over temperature (size 4 and above)**
102	Check for supply imbalance Check for supply disturbance such as notching from a DC drive Check enclosure / drive fans are still functioning correctly Check enclosure ventilation paths Check enclosure door filters Increase ventilation Decrease acceleration / deceleration rates Reduce drive switching frequency Reduce duty cycle Reduce motor load

Trip	Diagnosis
OI.AC	**Instantaneous output over current detected: peak output current greater than 225%**
3	Acceleration /deceleration rate is too short. If seen during autotune reduce voltage boost Pr **5.15** Check for short circuit on output cabling Check integrity of motor insulation Is motor cable length within limits for that frame size? Reduce the values in speed loop gain parameters – Pr **3.10**, Pr **3.11** and Pr **3.12** (RFC mode) Reduce the values in current loop gain parameters - Pr **4.13** and Pr **4.14** (RFC mode)
OIAC.P	**Power module over current detected from the module output currents**
104	Acceleration /deceleration rate is too short. If seen during autotune reduce voltage boost Pr **5.15** Check for short circuit on output cabling Check integrity of motor insulation Is motor cable length within limits for that frame size? Reduce the values in speed loop gain parameters – Pr **3.10**, Pr **3.11** and Pr **3.12** (RFC mode) Reduce the values in current loop gain parameters - Pr **4.13** and Pr **4.14** (RFC mode)
OI.br	**Braking transistor over-current detected: short circuit protection for the braking transistor activated**
4	Check braking resistor wiring Check braking resistor value is greater than or equal to the minimum resistance value Check braking resistor insulation
OIbr.P	**Power module braking IGBT over current**
103	Check braking resistor wiring Check braking resistor value is greater than or equal to the minimum resistance value Check braking resistor insulation
OIdC.P	**Power module over current detected from IGBT on state voltage monitoring**
109	Vce IGBT protection activated. Check motor and cable insulation.
O.Ld1	**Digital output overload: total current drawn from 24V supply and digital outputs exceeds 200mA**
26	Check total load on digital outputs (terminals 24,25,26)and +24V rail (terminal 22)
O.SPd	**Motor speed has exceeded the over speed threshold**
7	Increase the over speed trip threshold in Pr **3.08** (RFC mode) Speed has exceeded 1.2 x Pr **1.06** or Pr **1.07** (open loop mode) Reduce the speed loop P gain (Pr **3.10**) to reduce the speed overshoot (RFC mode)
OV	**DC bus voltage has exceeded the peak level or the maximum continuous level for 15 seconds**
2	Increase deceleration ramp (Pr **0.04**) Decrease braking resistor value (staying above the minimum value) Check nominal AC supply level Check for supply disturbances which could cause the DC bus to rise – voltage overshoot after supply recovery from a notch induced by DC drives. Check motor insulation **Drive voltage rating** / **Peak voltage** / **Maximum continuous voltage level (15s)** 200 / 415 / 410 400 / 830 / 815 575 / 990 / 970 690 / 1190 / 1175 If the drive is operating in low voltage DC mode the overvoltage trip level is 1.45 x Pr **6.46**.
OV.P	**Power module DC bus voltage has exceeded the peak level or the maximum continuous level for 15 seconds**
106	Increase deceleration ramp (Pr **0.04**) Decrease braking resistor value (staying above the minimum value) Check nominal AC supply level Check for supply disturbances which could cause the DC bus to rise – voltage overshoot after supply recovery from a notch induced by DC drives. Check motor insulation **Drive voltage rating** / **Peak voltage** / **Maximum continuous voltage level (15s)** 200 / 415 / 410 400 / 830 / 815 575 / 990 / 970 690 / 1190 / 1175 If the drive is operating in low voltage DC mode the overvoltage trip level is 1.45 x Pr **6.46**.

Trip	Diagnosis
PAd	**Keypad has been removed when the drive is receiving the speed reference from the keypad**
34	Install keypad and reset Change speed reference selector to select speed reference from another source
PH	**AC voltage input phase loss or large supply imbalance detected**
32	Ensure all three phases are present and balanced Check input voltage levels are correct (at full load) **NOTE** Load level must be between 50 and 100% for the drive to trip under phase loss conditions. The drive will attempt to stop the motor before this trip is initiated.
PH.P	**Power module phase loss detection**
107	Ensure all three phases are present and balanced Check input voltage levels are correct (at full load)
PS	**Internal power supply fault**
5	Remove any Solutions Modules and reset Hardware fault - return drive to supplier
PS.10V	**10V user power supply current greater than 10mA**
8	Check wiring to terminal 4 Reduce load on terminal 4
PS.24V	**24V internal power supply overload**
9	The total user load of the drive and Solutions Modules has exceeded the internal 24V power supply limit. The user load consists of the drive's digital outputs and the SM-I/O Plus digital outputs. • Reduce load and reset • Provide an external 24V >50W power supply • Remove any Solutions Modules and reset
PS.P	**Power module power supply fail**
108	Remove any Solutions Modules and reset Hardware fault - return drive to supplier
PSAVE.Er	**Power down save parameters in the EEPROM are corrupt**
37	Indicates that the power was removed when power down save parameters were being saved. The drive will revert back to the power down parameter set that was last saved successfully. Perform a user save (Pr **xx.00** to 1000 or 1001 and reset the drive) or power down the drive normally to ensure this trip does or occur the next time the drive is powered up.
rS	**Failure to measure resistance during autotune or when starting in open loop vector mode 0 or 3**
33	Check motor power connection continuity
SAVE.Er	**User save parameters in the EEPROM are corrupt**
36	Indicates that the power was removed when user parameters were being saved. The drive will revert back to the user parameter set that was last saved successfully. Perform a user save (Pr **xx.00** to 1000 or 1001 and reset the drive) to ensure this trip does or occur the next time the drive is powered up.
SCL	**Drive RS485 serial comms loss to remote keypad**
30	Reinstall the cable between the drive and keypad Check cable for damage Replace cable Replace keypad
SLX.dF	**Solutions Module slot X trip: Solutions Module type installed in slot X changed**
204,209	Save parameters and reset
SL3.dF	**Building automation interface slot trip**
214	Module typed changed

Trip	Diagnosis
SLX.Er	**Solutions Module slot X trip: Solutions Module in slot X has detected a fault**
202,207	**Automation (I/O Expansion) module category** Check value in Pr **15/16.50**. The following table lists the possible error codes for the SM-I/O Plus, SM-I/O Lite, SM-I/O Timer, SM-I/O PELV, SM-I/O 120V and SM-I/O 24V Protected. See the *Diagnostics* section in the relevant Solutions Module User Guide for more information.

Error code	Module	Reason for fault
0	All	No errors
1	All	Digital output overload
2	SM-I/O Lite	Analog input 1 current input too high (>22mA) or too low (<3mA)
	SM-I/O PELV, SM-I/O 24V Protected	Digital input overload
3	SM-I/O PELV, SM-I/O 24V Protected	Analog input 1 current input too low (<3mA)
	SM-I/O 24V Protected	Communications error
4	SM-I/O PELV	User power supply absent
74	All	Module over temperature

Trip	Diagnosis
SLX.Er	**Solutions Module slot X trip: Solutions Module in slot X has detected a fault**
202,207	**Fieldbus module category** Check value in Pr **15**/**16.50**. The following table lists the possible error codes for the Fieldbus modules. See the *Diagnostics* section in the relevant Solutions Module User Guide for more information.

Error code	Module	Trip Description
0	All	No trip
52	SM-PROFIBUS-DP, SM-Interbus, SM-DeviceNet	User control word trip
61	SM-PROFIBUS-DP, SM-Interbus, SM-DeviceNet	Configuration error
64	SM-DeviceNet	Expected packet rate timeout
65	SM-PROFIBUS-DP, SM-Interbus, SM-DeviceNet	Network loss
66	SM-PROFIBUS-DP	Critical link failure
	SM-CAN, SM-DeviceNet	Bus off error
70	All (except SM-Ethernet)	Flash transfer error
	SM-Ethernet	No valid menu data available for the module from the drive
74	All	Solutions module over temperature
75	SM-Ethernet	The drive is not responding
76	SM-Ethernet	The Modbus connection has timed out
80	All	Inter-option communications error
81	All	Communications error to slot 1
82	All	Communications error to slot 2
84	SM-Ethernet	Memory allocation error
85	SM-Ethernet	File system error
86	SM-Ethernet	Configuration file error
87	SM-Ethernet	Language file error
98	All	Internal watchdog error
99	All	Internal software error

<table>
<tr><th>Trip</th><th>Diagnosis</th></tr>
<tr><td>SL3.Er</td><td>Building automation interface: Module has detected a fault</td></tr>
<tr><td>212</td><td>Check value in Pr 17.50. The following table lists the possible error codes.
<table>
<tr><th>Error code</th><th>Trip Description</th></tr>
<tr><td>0</td><td>No trip</td></tr>
<tr><td>10</td><td>Module operating system error</td></tr>
<tr><td>20</td><td>Real time clock error</td></tr>
<tr><td>30</td><td>IP54 cooling fan power supply fault</td></tr>
<tr><td>40</td><td>Drive to option module interface error</td></tr>
<tr><td>50</td><td>Building automation network error</td></tr>
</table></td></tr>
<tr><td>SLX.HF</td><td>Solutions Module slot X trip: Solutions Module X hardware fault</td></tr>
<tr><td>200,205</td><td>Ensure Solutions Module is installed correctly
Return Solutions Module to supplier</td></tr>
<tr><td>SL3.HF</td><td>Building automation interface: Module hardware fault</td></tr>
<tr><td>210</td><td>Ensure Solutions Module is installed correctly
Return Solutions Module to supplier</td></tr>
<tr><td>SLX.nF</td><td>Solutions Module slot X trip: Solutions Module has been removed</td></tr>
<tr><td>203,208</td><td>Ensure Solutions Module is installed correctly
Reinstall Solutions Module
Save parameters and reset drive</td></tr>
<tr><td>SL3.nF</td><td>Building automation interface: Module has been removed</td></tr>
<tr><td>213</td><td>Ensure Solutions Module is installed correctly
Reinstall Solutions Module
Save parameters and reset drive</td></tr>
<tr><td>SL.rtd</td><td>Solutions Module trip: Drive mode has changed and Solutions Module parameter routing is now incorrect</td></tr>
<tr><td>215</td><td>Press reset.
If the trip persists, contact the supplier of the drive.</td></tr>
<tr><td>SLX.tO</td><td>Solutions Module slot X trip: Solutions Module watchdog timeout</td></tr>
<tr><td>201,206</td><td>Press reset.
If the trip persists, contact the supplier of the drive.</td></tr>
<tr><td>SL3.tO</td><td>Building automation interface: Module watchdog timeout</td></tr>
<tr><td>211</td><td>Press reset.
If the trip persists, contact the supplier of the drive.</td></tr>
<tr><td>t038</td><td>User defined trip</td></tr>
<tr><td>38</td><td>Onboard PLC program must be interrogated to find the cause of this trip</td></tr>
<tr><td>t040 to t089</td><td>User defined trip</td></tr>
<tr><td>40 to 89</td><td>Onboard PLC program must be interrogated to find the cause of this trip</td></tr>
<tr><td>t099</td><td>User defined trip</td></tr>
<tr><td>99</td><td>Onboard PLC program must be interrogated to find the cause of this trip</td></tr>
<tr><td>t101</td><td>User defined trip</td></tr>
<tr><td>101</td><td>Onboard PLC program must be interrogated to find the cause of this trip</td></tr>
<tr><td>t112 to t160</td><td>User defined trip</td></tr>
<tr><td>112 to 160</td><td>Onboard PLC program must be interrogated to find the cause of this trip</td></tr>
<tr><td>t168 to t174</td><td>User defined trip</td></tr>
<tr><td>168 to 174</td><td>Onboard PLC program must be interrogated to find the cause of this trip</td></tr>
<tr><td>t216</td><td>User defined trip</td></tr>
<tr><td>216</td><td>Onboard PLC program must be interrogated to find the cause of this trip</td></tr>
<tr><td>th</td><td>Motor thermistor trip</td></tr>
<tr><td>24</td><td>Check motor temperature
Check thermistor continuity
Set Pr 7.15 = VOLt and reset the drive to disable this function</td></tr>
</table>

Trip	Diagnosis
thS	**Motor thermistor short circuit**
25	Check motor thermistor wiring Replace motor / motor thermistor Set Pr **7.15** = VOLt and reset the drive to disable this function
tunE*	**Autotune stopped before completion**
18	The drive has tripped out during the autotune The red stop key has been pressed during the autotune The Enable signal (terminal 31) was active during the autotune procedure
tunE1*	**Required speed could not be reached during the inertia test (see Pr 5.12)**
11	Ensure the motor is free to turn i.e. brake was released
tunE2*	**Motor could not be stopped during the inertia test (see Pr 5.12)**
12	Check motor cable wiring is correct
tunE3*	**Measured inertia out of range (see Pr 5.12)**
13	Check motor cable wiring is correct
Unid.P	**Power module unidentified trip**
110	Check all interconnecting cables between power modules Ensure cables are routed away from electrical noise sources
UP ACC	**Onboard PLC program: cannot access Onboard PLC program file on drive**
98	Disable drive - write access is not allowed when the drive is enabled Another source is already accessing Onboard PLC program - retry once other action is complete
UP div0	**Onboard PLC program attempted divide by zero**
90	Check program
UP OFL	**Onboard PLC program variables and function block calls using more than the allowed RAM space (stack overflow)**
95	Check program
UP ovr	**Onboard PLC program attempted out of range parameter write**
94	Check program
UP PAr	**Onboard PLC program attempted access to a non-existent parameter**
91	Check program
UP ro	**Onboard PLC program attempted write to a read-only parameter**
92	Check program
UP So	**Onboard PLC program attempted read of a write-only parameter**
93	Check program
UP udF	**Onboard PLC program un-defined trip**
97	Check program
UP uSEr	**Onboard PLC program requested a trip**
96	Check program
UV	**DC bus under voltage threshold reached**
1	Check AC supply voltage level **Drive voltage rating (Vac) / Under voltage threshold (Vdc) / UV reset voltage (Vdc)** 200 / 175 / 215V 400 / 350 / 425V 575 & 690 / 435 / 590V

*If a tunE through tunE 3 trip occurs, then after the drive is reset the drive cannot be made to run unless it is disabled via the Enable input (terminal 31), drive enable parameter (Pr **6.15**) or the control word (Pr **6.42** and Pr **6.43**).

Table 14-2 Serial communications look-up table

No.	Trip	No.	Trip	No.	Trip
1	UV	40 to 89	t040 to t089	182	C.Err
2	OV	90	UP div0	183	C.dAt
3	OI.AC	91	UP PAr	184	C.FULL
4	OI.br	92	UP ro	185	C.Acc
5	PS	93	UP So	186	C.rtg
6	Et	94	UP ovr	187	C.TyP
7	O.SPd	95	UP OFL	188	C.cPr
8	PS.10V	96	UP uSEr	189	Reserved
9	PS.24V	97	UP udF	190	Reserved
10	t010	98	UP ACC	191	Reserved
11	tunE1	99	t099	192	Reserved
12	tunE2	100		193	Reserved
13	tunE3	101	t101	194	Reserved
14	Reserved	102	Oht4.P	195	Reserved
15	Reserved	103	OIbr.P	196	Reserved
16	Reserved	104	OIAC.P	197	Reserved
17	Reserved	105	Oht2.P	198	Reserved
18	Reserved	106	OV.P	199	DESt
19	It.br	107	PH.P	200	SL1.HF
20	It.AC	108	PS.P	201	SL1.tO
21	O.ht1	109	OIdC.P	202	SL1.Er
22	O.ht2	110	Unid.P	203	SL1.nF
23	O.CtL	111	ConF.P	204	SL1.dF
24	th	112 to 160	t112 to t160	205	SL2.HF
25	thS	161	Reserved	206	SL2.tO
26	O.Ld1	162	Reserved	207	SL2.Er
27	O.ht3	163	Reserved	208	SL2.nF
28	cL2	164	Reserved	209	SL2.dF
29	cL3	165	Reserved	210	Reserved
30	SCL	166	Reserved	211	Reserved
31	EEF	167	Reserved	212	Reserved
32	PH	168 to 174	t168 to t174	213	Reserved
33	rS	175	C.Prod	214	Reserved
34	PAd	176	Reserved	215	SL.rtd
35	CL.bit	177	C.boot	216	t216
36	SAVE.Er	178	C.bUSY	217 to 232	HF17 to HF32
37	PSAVE.Er	179	C.Chg		
38	LOAD	180	C.OPtn		
39	Reserved	181	C.RdO		

The trips can be grouped into the following categories. It should be noted that a trip can only occur when the drive is not tripped or is already tripped but with a trip with a lower priority number.

Table 14-3 Trip categories

Priority	Category	Trips	Comments
1	Hardware faults	HF01 to HF16	These indicate fatal problems and cannot be reset. The drive is inactive after one of these trips and the display shows **HFxx**. The Drive OK relay opens and the serial comms will not function.
2	Non-resetable trips	HF17 to HF32, SL1.HF, SL2.HF	Cannot be reset. Requires the drive to be powered down.
3	EEF trip	EEF	Cannot be reset unless a code to load defaults is first entered in Pr **xx.00** or Pr **11.43**.
4	SMARTCARD trips	C.boot, C.Busy, C.Chg, C.OPtn, C.RdO, C.Err, C.dat, C.FULL, C.Acc, C.rtg, C.TyP, C.cpr	Can be reset after 1.0s SMARTCARD trips have priority 5 during power-up
4	Power supply trips	PS.24V	Can be reset after 1.0s
5	Autotune	tunE, tunE1 to tunE3	Can be reset after 1.0s, but the drive cannot be made to run unless it is disabled via the Enable input (terminal 31), *Drive enable* (Pr **6.15**) or the *Control word* (Pr **6.42** and Pr **6.43**).
5	Normal trips with extended reset	OI.AC, OI.Br, OIAC.P, OIBr.P, OIdC.P	Can be reset after 10.0s
5	Normal trips	All other trips not included in this table	Can be reset after 1.0s
5	Non-important trips	th, thS, Old1, cL2, cL3, SCL	If Pr **10.37** is 1 or 3 the drive will stop before tripping
5	Phase loss	PH	The drive attempts to stop before tripping
5	Drive over-heat based on thermal model	O.ht3	The drive attempts to stop before tripping, but if it does not stop within 10s the drive will automatically trip
6	Self-resetting trips	UV	Under voltage trip cannot be reset by the user, but is automatically reset by the drive when the supply voltage is with specification

Although the UV trip operates in a similar way to all other trips, all drive functions can still operate but the drive cannot be enabled. The following differences apply to the UV trip:

1. Power-down save user parameters are saved when UV trip is activated except when the main high voltage supply is not active (i.e. operating in Low Voltage DC Supply Mode, Pr **6.44** = 1).
2. The UV trip is self-resetting when the DC bus voltage rises above the drive restart voltage level. If another trip is active instead of UV at this point, the trip is not reset.
3. The drive can change between using the main high voltage supply and low voltage DC supply only when the drive is in the under voltage condition (Pr **10.16** = 1). The UV trip can only be seen as active if another trip is not active in the under voltage condition.
4. When the drive is first powered up a UV trip is initiated if the supply voltage is below the restart voltage level and another trip is not active. This does not cause save power down save parameters to be saved at this point.

14.2 Alarm indications

In any mode an alarm flashes alternately with the data displayed when one of the following conditions occur. If action is not taken to eliminate any alarm except "Autotune", "Lt" and "PLC" the drive may eventually trip. Alarms flash once every 640ms except "PLC" which flashes once every 10s. Alarms are not displayed when a parameter is being edited.

Table 14-4 Alarm indications

Lower display	Description
br.rS	Braking resistor overload
Braking resistor I^2t accumulator (Pr **10.39**) in the drive has reached 75.0% of the value at which the drive will trip and the braking IGBT is active.	
Hot	Heatsink or control board or inverter IGBT over temperature alarms are active
• The drive heatsink temperature has reached a threshold and the drive will trip O.ht2 if the temperature continues to rise (see the O.ht2 trip). Or • The ambient temperature around the control PCB is approaching the over temperature threshold (see the O.CtL trip).	
OVLd	Motor overload
The motor I^2t accumulator (Pr **4.19**) in the drive has reached 75% of the value at which the drive will be tripped and the load on the drive is >100%	
Auto tune	Autotune in progress
The autotune procedure has been initialised. 'Auto' and 'tunE' will flash alternatively on the display.	
Lt	Limit switch is active
Indicates that a limit switch is active and that it is causing the motor to be stopped (i.e. forward limit switch with forward reference etc.)	
PLC	Onboard PLC program is running
An Onboard PLC program is installed and running. The lower display will flash 'PLC' once every 10s.	

14.3 Status indications

Table 14-5 Status indications

Upper display	Description	Drive output stage
ACUU	AC Supply loss	Enabled
The drive has detected that the AC supply has been lost and is attempting to maintain the DC bus voltage by decelerating the motor.		
Auto	Auto mode	Enabled
The drive is running in Auto mode		
dc	DC applied to the motor	Enabled
The drive is applying DC injection braking.		
dEC	Decelerating	Enabled
The drive is decelerating the motor.		
Hand	Hand mode	Enabled
The drive is running in Hand mode		
Heat	Motor pre-heat	Enabled
Motor pre-heat active		
inh	Inhibit	Disabled
The drive is inhibited and cannot be run. The drive enable signal is not applied to terminal 31 or Pr **6.15** is set to 0.		
Off	Drive is stopped	Disabled
Drive is stopped		
rdY	Ready	Disabled
The drive is ready to be run.		
run	Drive is running	Enabled
Drive is running with Hand / Off / Auto disabled		
StoP	Stop or holding zero speed	Enabled
The drive is holding zero speed.		
triP	Trip condition	Disabled
The drive has tripped and is no longer controlling the motor. The trip code appears on the right hand side of the top row of the display.		

Table 14-6 Solutions Module and SMARTCARD status indications at power-up

Lower display	Description
boot	
A parameter set is being transferred from the SMARTCARD to the drive during power-up. For further information, please refer to section 10.2.4 *Booting up from the SMARTCARD on every power up (Pr 11.42 = boot (4))* on page 127.	
cArd	
The drive is writing a parameter set to the SMARTCARD during power-up. For further information, please refer to section 10.2.3 *Auto saving parameter changes (Pr 11.42 = Auto (3))* on page 126.	
loAding	
The drive is writing information to a Solutions Module.	

14.4 Displaying the trip history

The drive retains a log in Pr **10.20** to Pr **10.29** of the last 10 trips that have occurred. The state of Pr **6.49** determines whether date and time or module number, associated with the trip, is stored (see Table 14-7).

Table 14-7 Trip log definition

Trip number	Trip code	Pr 6.49 = 1		Pr 6.49 = 0
		Date	Time	Module number
Trip 1	10.20	10.41	10.42	10.42
Trip 2	10.21	10.43	10.44	10.44
Trip 3	10.22	10.45	10.46	10.46
Trip 4	10.23	10.47	10.48	10.48
Trip 5	10.24	10.49	10.50	10.50
Trip 6	10.25	10.51	10.52	10.52
Trip 7	10.26	10.53	10.54	10.54
Trip 8	10.27	10.55	10.56	10.56
Trip 9	10.28	10.57	10.58	10.58
Trip 10	10.29	10.59	10.60	10.60

Trip 1 is the most recent trip or the current trip if the drive is in a trip condition and trip 10 is the oldest trip.

The date and time for Pr **10.41** to **10.59** are taken from the values in Pr **6.16** and Pr **6.17**.

If any parameter between Pr **10.20** and Pr **10.29** inclusive is read by serial communications, then the trip number in Table 14-1 *Trip indications* on page 236 is the value transmitted.

14.5 Behaviour of the drive when tripped

If the drive trips, the output of the drive is disabled so that the drive stops controlling the motor. If any trip occurs (except the UV trip) the following read only parameters are frozen until the trip is cleared. This is to help in diagnosing the cause of the trip.

Parameter	Description
1.01	Frequency/speed reference
1.02	Pre-skip filter reference
1.03	Pre-ramp reference
2.01	Post-ramp reference
3.01	Final speed ref
3.02	Speed feedback
3.03	Speed error
3.04	Speed controller output
4.01	Current magnitude
4.02	Active current
4.17	Reactive current
5.01	Output frequency
5.02	Output voltage
5.03	Power
5.05	DC bus voltage
7.01	Analog input 1
7.02	Analog input 2
7.03	Analog input 3

Fire mode
If Fire mode is activated, then only certain trips will be active. Refer to section 12.21.3 *Fire mode* on page 208.

Analog and digital I/O
The analog and digital I/O on the drive continue to work correctly if a trip occurs, except the digital outputs will go low if one of the following trips occur: O.Ld1, PS.24V.

Drive logic functions
The drive logic functions (i.e. PID, variable selectors, threshold detectors, etc.) continue to operate when the drive is tripped.

Onboard PLC program
The Onboard PLC program continues to run if the drive is tripped, except if one of Onboard PLC program trips occur.

Braking IGBT
The braking IGBT continues to operate even when the output of the drive is not enabled (except if the low voltage DC supply is being used), but is only disabled if any of the following trips occurs or would occur if another trip had not already become active: OI.Br, PS, It.Br or OV.

15 UL Listing Information

The Control Techniques UL file number is E171230. Confirmation of UL listing can be found on the UL website: www.ul.com.

15.1 Common UL information

Conformity

The drive conforms to UL listing requirements only when the following are observed:

- The drive is installed in a type 1 enclosure, or better, as defined by UL50
- The ambient temperature does not exceed 40°C (104°F) when the drive is operating
- The terminal tightening torques specified in section 3.10.1 *Terminal sizes and torque settings* on page 49.
- If the drive control stage is supplied by an external power supply (+24V), the external power supply must be a UL Class 2 power supply

Motor overload protection

The drive provides motor overload protection. The default overload protection level is no higher than 113% of full-load current (FLC) of the drive in open loop mode and no higher than 114% of full-load current (FLC) of the drive in RFC mode. It is necessary for the motor rated current to be entered into Pr **0.46** (or Pr **5.07**) for the protection to operate correctly. The protection level may be adjusted below 150% if required. Refer to section 9.2 *Current limits* on page 122 for more information. The drive also provides motor thermal protection. Refer to section 9.3 *Motor thermal protection* on page 123.



Fire Mode - important warning

When Fire Mode is active the motor overload and thermal protection are disabled. Fire Mode is provided for use only in emergency situations where the safety risk from disabling overload protection is less than the risk from the drive tripping - typically in smoke extraction operation to permit evacuation of a building. Fire Mode is activated by setting Pr **1.53** (*Fire mode set speed*) to a non-zero value and asserting digital input 4. When operating in Fire Mode the drive displays a flashing warning *Fire mode active*. Care must be taken to prevent inadvertent activation of Fire Mode, as well as ensuring that after using or testing the function the input is returned to the normal state, as confirmed by the absence of the flashing warning. Care must be taken to ensure that Pr **1.53** or Pr **1.54** are not inadvertently re-allocated to different inputs or variables. It should be noted that, by default, Pr **1.54** is controlled from digital input 4 and changing Pr **6.04** or Pr **8.24** can re-allocate this digital input to another parameter. These parameters are at access level 2 in order to minimise the risk of inadvertent or unauthorized changes. It is recommended that User Security be applied to further reduce the risk (see section 5.10 *Parameter access level and security* on page 81). These parameters may also be changed via serial communications so adequate precautions should be taken if this functionality is utilised.

Overspeed Protection

The drive provides overspeed protection. However, it does not provide the level of protection afforded by an independent high integrity overspeed protection device.

15.2 Power dependant UL information

15.2.1 Affinity size 1 to 6

Conformity

The drive conforms to UL listing requirements only when the following is observed:

Fuses

Size 1 to 3

- The correct UL-listed fast acting fuses (class CC up to 30A and class J above 30A), e.g. Bussman Limitron KTK series, Gould Amp-Trap ATM series or equivalent, are used in the AC supply. The drive does not comply with UL if MCBs are used in place of fuses.

For further details on fusing, refer to in Table 4-3 and Table 4-4 on page 57.

Size 4 to 6

- The UL-listed Ferraz HSJ (High speed J class) fuses are used in the AC supply. The drive does not comply with UL if any other fuses or MCBs are used in place of those stated.

For further details on fusing, refer to Table 4-5 on page 58.

Field wiring

Size 1 to 4

- Class 1 60/75°C (140/167°F) copper wire only is used in the installation

Size 5 and 6

- Class 1 75°C (167°F) copper wire only is used in the installation

Field wiring connectors

Sizes 4 to 6

- UL listed wire connectors are used for terminating power circuit field wiring, e.g. Ilsco TA series

15.3 AC supply specification

The drive is suitable for use in a circuit capable of delivering not more than 100,000rms symmetrical Amperes at 264Vac rms maximum (200V drives), 528Vac rms maximum (400V drives) or 600Vac rms maximum (575V and 690V drives).

15.4 Maximum continuous output current

The drive models are listed as having the maximum continuous output currents (FLC) shown in Table 15-1, Table 15-2, Table 15-3 and Table 15-4 (see Chapter 13 *Technical Data* on page 219 for details).

Table 15-1 Maximum continuous output current (200V drives)

Model	FLC (A)	Model	FLC (A)
BA1201	5.2	BA3201	42
BA1202	6.8	BA3202	54
BA1203	9.6	BA4201	68
BA1204	11	BA4202	80
BA2201	15.5	BA4203	104
BA2202	22		
BA2203	28		

Table 15-2 Maximum continuous output current (400V drives)

Model	FLC (A)	Model	FLC (A)
BA1401	2.8	BA3401	35
BA1402	3.8	BA3402	43
BA1403	5.0	BA3403	56
BA1404	6.9	BA4401	68
BA1405	8.8	BA4402	83
BA1406	11	BA4403	104
BA2401	15.3	BA5401	138
BA2402	21	BA5402	168
BA2403	29	BA6401	205
		BA6402	236

Table 15-3 Maximum continuous output current (575V drives)

Model	FLC (A)	Model	FLC (A)
BA3501	5.4	BA3505	16
BA3502	6.1	BA3506	22
BA3503	8.3	BA3507	27
BA3504	11		

Table 15-4 Maximum continuous output current (690V drives)

Model	FLC (A)	Model	FLC (A)
BA4601	22	BA5601	84
BA4602	27	BA5602	99
BA4603	36	BA6601	125
BA4604	43	BA6602	144
BA4605	52		
BA4606	62		

15.5 Safety label

The safety label supplied with the connectors and mounting brackets must be placed on a fixed part inside the drive enclosure where it can be seen clearly by maintenance personnel for UL compliance.

The label clearly states “CAUTION Risk of Electric Shock Power down unit 10 minutes before removing cover”.

15.6 UL listed accessories

- BA-Keypad
- SM-I/O Lite
- SM-Ethernet
- SM-I/O Plus
- SM-DeviceNet
- SM-I/O 120V
- SM-PROFIBUS-DP

List of figures

Figure 2-1 Features 9
Figure 2-2 Features of the drive 14
Figure 2-3 Typical drive rating label 15
Figure 2-4 Options available with Affinity 16
Figure 3-1 Location and identification of standard drive terminal covers 20
Figure 3-2 Removing the standard drive size 1 terminal covers 21
Figure 3-3 Removing the standard drive size 2 terminal covers 21
Figure 3-4 Removing the standard drive size 3 terminal covers 21
Figure 3-5 Removing the size 4, 5 and 6 standard drive terminal covers (size 4 illustrated) 22
Figure 3-6 Removing the finger-guard break-outs 22
Figure 3-7 Removing the DC terminal cover break-outs 22
Figure 3-8 Size 4 to 6 finger-guard grommets 23
Figure 3-9 Size 4 standard drive with conduit connection box installed 23
Figure 3-10 Removing the top cover 23
Figure 3-11 Installation and removal of a Solutions Module 24
Figure 3-12 Installation and removal of a keypad 24
Figure 3-13 Surface mounting the standard size 1 drive with conduit connection box installed 25
Figure 3-14 Surface mounting the standard size 2 drive with conduit connection box installed 26
Figure 3-15 Surface mounting the standard size 3 drive with conduit connection boxes installed 26
Figure 3-16 Surface mounting the standard size 4 drive with conduit connection boxes installed 27
Figure 3-17 Surface mounting the standard size 5 drive with conduit connection boxes installed 28
Figure 3-18 Surface mounting the standard size 6 drive with conduit connection boxes installed 29
Figure 3-19 Through-panel mounting the standard size 1 drive 30
Figure 3-20 Through-panel mounting the standard size 2 drive 31
Figure 3-21 Through-panel mounting the standard size 3 drive 31
Figure 3-22 Through-panel mounting the standard size 4 drive 32
Figure 3-23 Through-panel mounting the standard size 5 drive 33
Figure 3-24 Through-panel mounting the standard size 6 drive 34
Figure 3-25 Size 4, 5 and 6 mounting bracket 35
Figure 3-26 Orientation of the size 4, 5 and 6 mounting bracket 35
Figure 3-27 Location of top surface mounting brackets for size 5 and 6 35
Figure 3-28 Size 1 E12/E54 drive surface mounting 36
Figure 3-29 Size 2 E12/E54 drive surface mounting 36
Figure 3-30 Size 3 E12/E54 drive surface mounting 37
Figure 3-31 Enclosure layout 38
Figure 3-32 Enclosure having front, sides and top panels free to dissipate heat 39
Figure 3-33 Example of IP54 (UL Type 12 / NEMA 12) through-panel layout 40
Figure 3-34 Installing the gasket 40
Figure 3-35 Installation of IP54 insert for size 1 41
Figure 3-36 Installation of IP54 insert for size 2 41
Figure 3-37 Option 2 for achieving IP54 (UL type 12 / NEMA 12) through-panel mounting 42
Figure 3-38 Option 3 for achieving IP54 (UL Type 12 / NEMA 12) through panel mounting 43
Figure 3-39 Footprint mounting the EMC filter 44
Figure 3-40 Bookcase mounting the EMC filter 44
Figure 3-41 Size 4 to 6 mounting of EMC filter 44
Figure 3-42 Size 1 external EMC filter 45
Figure 3-43 Size 2 external EMC filter 45
Figure 3-44 Size 3 external EMC filter 46
Figure 3-45 Size 4 and 5 external EMC filter 47
Figure 3-46 Size 6 external EMC filter 48
Figure 4-1 Size 1 power connections 51
Figure 4-2 Size 2 power connections 52
Figure 4-3 Size 3 power connections 52
Figure 4-4 Size 4, 5 and 6 power connections 53
Figure 4-5 Size 2 ground connections 53
Figure 4-6 Size 3 ground connections 54
Figure 4-7 Size 4, 5 and 6 ground connections 54
Figure 4-8 Location of the size 6 heatsink fan supply connections 55
Figure 4-9 Size 6 heatsink fan supply connections 55
Figure 4-10 Cable construction influencing the capacitance 60
Figure 4-11 Preferred chain connection for multiple motors 60
Figure 4-12 Alternative connection for multiple motors 60
Figure 4-13 Typical protection circuit for a braking resistor . 62
Figure 4-14 Installation of grounding clamp (size 1 and 2) . 64
Figure 4-15 Installation of grounding clamp (size 3) 64
Figure 4-16 Installation of grounding bracket (sizes 1 to 6) 64
Figure 4-17 Size 4 and 5 grounding link bracket in its surface mount position (as supplied) 65
Figure 4-18 Size 4 and 5 grounding link bracket folded up into its through- panel mount position 65
Figure 4-19 Removal of internal EMC filter (size 1 to 3) 65
Figure 4-20 Removal of internal EMC filter (sizes 4 to 6) 65
Figure 4-21 General EMC enclosure layout showing ground connections 66
Figure 4-22 Drive cable clearances 67
Figure 4-23 Supply and ground cable clearance (size 1 to 3) 68
Figure 4-24 Supply and ground cable clearance (size 4 to 6) 68
Figure 4-25 Sensitive signal circuit clearance 69
Figure 4-26 Grounding the drive, motor cable shield and filter 69
Figure 4-27 Grounding the motor cable shield 69
Figure 4-28 Shielding requirements of optional external braking resistor 69
Figure 4-29 Grounding of signal cable shields using the grounding bracket 70
Figure 4-30 Connecting the motor cable to a terminal block in the enclosure 70
Figure 4-31 Connecting the motor cable to an isolator / disconnect switch 70
Figure 4-32 Surge suppression for digital and unipolar inputs and outputs 71
Figure 4-33 Surge suppression for analog and bipolar inputs and outputs 71
Figure 4-34 Location of the RJ45 serial comms connector 71
Figure 4-35 Default terminal functions 73
Figure 4-36 Multi-drop connection 75
Figure 5-1 BA-Keypad 77

Figure 5-2 Display modes 78
Figure 5-3 Mode examples 78
Figure 5-4 Parameter navigation 78
Figure 5-5 Menu structure 79
Figure 5-6 Menu 0 copying 79
Figure 6-1 Menu 0 logic diagram 88
Figure 6-2 Fixed and variable V/f characteristics 91
Figure 7-1 Installation of the SMARTCARD 100
Figure 7-2 Macro 1 logic diagram 101
Figure 7-3 Macro 2 logic diagram 103
Figure 7-4 Macro 3 logic diagram 105
Figure 7-5 Macro 4 logic diagram 107
Figure 7-6 Macro 5 logic diagram 109
Figure 7-7 Macro 6 logic diagram 111
Figure 8-1 Minimum connections to get the motor running in any operating mode 114
Figure 9-1 Motor thermal protection 123
Figure 9-2 Torque and rated voltage against speed 124
Figure 10-1 Installation of the SMARTCARD 125
Figure 10-2 Basic SMARTCARD operation 125
Figure 11-1 Onboard PLC program scheduling 132
Figure 12-1 Menu 1 logic diagram 142
Figure 12-2 Menu 2 logic diagram 146
Figure 12-3 Menu 3 Open-loop logic diagram 149
Figure 12-4 Menu 3 RFC logic diagram 150
Figure 12-5 Menu 4 Open loop logic diagram 152
Figure 12-6 Menu 4 RFC logic diagram 153
Figure 12-7 Menu 5 Open-loop logic diagram 155
Figure 12-8 Menu 5 RFC logic diagram 156
Figure 12-9 Menu 6 logic diagram 159
Figure 12-10 Menu 7 logic diagram 161
Figure 12-11 Menu 8 logic diagram 164
Figure 12-12 Menu 9 logic diagram: Programmable logic ...167
Figure 12-13 Menu 9 logic diagram: Motorized pot and binary sum 168
Figure 12-14 Menu 9 logic diagram: Timers 169
Figure 12-15 Menu 12 logic diagram 174
Figure 12-16 Menu 12 logic diagram (continued) 175
Figure 12-17 Open-loop brake function 176
Figure 12-18 Open-loop brake sequence 176
Figure 12-19 RFC brake function 177
Figure 12-20 RFC brake sequence 177
Figure 12-21 Menu 14 Logic diagram - Independant controllers 180
Figure 12-22 Menu 14 Logic diagram - Combined control ..182
Figure 12-23 Location of Solutions Module slots and their corresponding menu numbers 185
Figure 12-24 SM-I/O Plus analog logic diagram 186
Figure 12-25 SM-I/O Plus digital logic diagram 1 187
Figure 12-26 SM-I/O Plus digital logic diagram 2 188
Figure 12-27 SM-I/O Lite digital I/O logic diagram 190
Figure 12-28 SM-I/O Lite analog I/O logic diagram 191
Figure 12-29 SM-I/O PELV digital I/O logic diagram 193
Figure 12-30 SM-I/O PELV digital input logic diagram 194
Figure 12-31 SM-I/O PELV relay logic diagram 194
Figure 12-32 SM-I/O PELV analog input logic diagram 195
Figure 12-33 SM-I/O PELV analog output logic diagram 195
Figure 12-34 SM-I/O 24V Protected digital I/O logic diagram 197
Figure 12-35 SM-I/O 24V Protected digital I/O logic diagram 198
Figure 12-36 SM-I/O 24V Protected relay logic diagram 198
Figure 12-37 SM-I/O 24V Protected analog output logic diagram 199
Figure 12-38 SM-I/O 120V digital input logic diagram 200
Figure 12-39 SM-I/O 120V relay diagram 201
Figure 12-40 State diagram 208
Figure 14-1 Keypad status modes 235
Figure 14-2 Location of the status LED 235

List of tables

Table 2-1 200V Drive ratings including types E12/E54 (200V to 240V ±10%) 10
Table 2-2 400V Drive ratings including types E12/E54 (380V to 480V ±10%) 11
Table 2-3 575V Drive ratings including types E12/E54 (500V to 575V ±10%) 12
Table 2-4 690V Drive ratings including types E12/E54 (500V to 690V ±10%) 12
Table 2-5 Typical overload limits for size 1 to 5 13
Table 2-6 Typical overload limits for size 6 13
Table 2-7 Solutions Module identification 17
Table 2-8 Parts supplied with the drive 18
Table 3-1 Conduit box part numbers 23
Table 3-2 Mounting brackets (Standard) 35
Table 3-3 E12/E54 mounting brackets 37
Table 3-4 Description of fixings 42
Table 3-5 Quantity of nylon washers included in the kit boxes 42
Table 3-6 Environment considerations 43
Table 3-7 Power losses from the front of the drive when through-panel mounted 43
Table 3-8 Drive EMC filter details (size 1 to 6) 44
Table 3-9 Drive control and relay terminal data 49
Table 3-10 Wall mounted drive power terminal data 49
Table 3-11 Plug-in terminal block maximum cable sizes 49
Table 3-12 Schaffner external EMC filter terminal data 49
Table 3-13 Epcos external EMC Filter terminal data 49
Table 4-1 Behaviour of the drive in the event of a motor circuit ground (earth) fault with an IT supply 54
Table 4-2 Supply fault current used to calculate maximum input currents 56
Table 4-3 Size 1 to 3 input current, fuse and cable size ratings (European) 56
Table 4-4 Size 1 to 3 input current, fuse and cable size ratings (USA) 57
Table 4-5 Size 4 and larger input current, fuse and cable size ratings 58
Table 4-6 Maximum motor cable lengths (200V drives) 59
Table 4-7 Maximum motor cable lengths (400V drives) 59
Table 4-8 Maximum motor cable lengths (575V drives) 59
Table 4-9 Maximum motor cable lengths (690V drives) 59
Table 4-10 Braking transistor turn on voltage 61
Table 4-11 Heatsink mounted braking resistor data 61
Table 4-12 Minimum resistance values and peak power rating for the braking resistor at 40°C (104°F) ..62
Table 4-13 Affinity and EMC filter cross reference 64
Table 4-14 Second environment emission compliance 67
Table 4-15 Connection details for RJ45 connector 71
Table 4-16 Isolated serial comms lead details 71
Table 4-17 The terminal connections consist of: 72
Table 5-1 Advanced menu descriptions 79
Table 5-2 Menu 40 parameter descriptions 79
Table 5-3 Menu 41 parameter descriptions 80
Table 5-4 Alarm indications 80
Table 5-5 Status indications 80
Table 5-6 Solutions Module and SMARTCARD status indications on power-up 80
Table 7-1 Macro numbers 99
Table 7-2 Macro 2 - menu 0 parameter differences 102
Table 7-3 Macro 3 - menu 0 parameter differences 104
Table 7-4 Macro 4 - menu 0 parameter differences 106
Table 7-5 Macro 5 - menu 0 parameter differences 108
Table 7-6 Macro 6 - menu 0 parameter differences 110
Table 8-1 Minimum control connection requirements for each control mode 112
Table 9-1 Available switching frequencies 123
Table 9-2 Sample rates for various control tasks at each switching frequency 124
Table 10-1 SMARTCARD data blocks 125
Table 10-2 SMARTCARD codes 126
Table 10-3 Key to parameter table coding 127
Table 10-4 Trip conditions 129
Table 10-5 SMARTCARD status indications 130
Table 12-1 Menu descriptions 134
Table 12-2 Key to parameter table coding 134
Table 12-3 Feature look-up table 135
Table 12-4 Definition of parameter ranges & variable maximums 138
Table 12-5 Maximum motor rated current 140
Table 12-6 Defaults for Pr 10.30 and Pr 10.31 172
Table 12-7 Active reference 207
Table 13-1 Maximum permissible continuous output current @ 40°C (104°F) ambient for wall mounted drives 219
Table 13-2 Maximum permissible continuous output current @ 40°C (104°F) ambient with IP54 insert and standard fan installed 220
Table 13-3 Maximum permissible continuous output current @ 50°C (122°F) ambient for wall mounted drives 221
Table 13-4 Losses @ 40°C (104°F) ambient for wall mounted drives 222
Table 13-5 Losses @ 40°C (104°F) ambient with IP54 insert and standard fan installed 223
Table 13-6 Losses @ 50°C (122°F) ambient for wall mounted drives 224
Table 13-7 Power losses from the front of the drive when through-panel mounted 225
Table 13-8 IP Rating degrees of protection 226
Table 13-9 UL / NEMA enclosure ratings 226
Table 13-10 Acoustic noise data for wall mounted drives 226
Table 13-11 Overall wall mounted standard drive dimensions 227
Table 13-12 Overall wall mounted standard drive dimensions with conduit box installed 227
Table 13-13 Overall E12/E54 drive dimensions 227
Table 13-14 Overall wall mounted drive weights 227
Table 13-15 Overall E12/E54 drive weights 227
Table 13-16 Supply fault current used to calculate maximum input currents 227
Table 13-17 Size 1 to 3 input current, fuse and cable size ratings 228
Table 13-18 Size 4, 5 and 6 input current, fuse and cable size ratings 229
Table 13-19 Maximum motor cable lengths (200V drives) 229
Table 13-20 Maximum motor cable lengths (400V drives) 230
Table 13-21 Maximum motor cable lengths (575V drives) 230
Table 13-22 Maximum motor cable lengths (690V drives) 230
Table 13-23 Minimum resistance values and peak power rating for the braking resistor at 40°C (104°F) 230
Table 13-24 Drive control and relay terminal data 230
Table 13-25 Wall mounted drive power terminal data 230
Table 13-26 Immunity compliance 231
Table 13-27 Size 1 emission compliance 231

Table 13-28 Size 2 emission compliance 231
Table 13-29 Size 3 emission compliance 231
Table 13-30 Size 4 (200V & 400V) emission compliance ..231
Table 13-31 Size 4 (690V) emission compliance 232
Table 13-32 Size 5 (400V) emission compliance 232
Table 13-33 Size 5 (690V) emission compliance 232
Table 13-34 Size 6 (400V only) emission compliance 232
Table 13-35 Size 6 (690V only) emission compliance 232
Table 13-36 EMC filter cross reference 232
Table 13-37 Optional external EMC filter details 233
Table 13-38 Optional external EMC filter dimensions 234
Table 14-1 Trip indications 236
Table 14-2 Serial communications look-up table 245
Table 14-3 Trip categories 246
Table 14-4 Alarm indications 246
Table 14-5 Status indications 247
Table 14-6 Solutions Module and SMARTCARD status indications at power-up 247
Table 14-7 Trip log definition 247
Table 15-1 Maximum continuous output current (200V drives) 249
Table 15-2 Maximum continuous output current (400V drives) 249
Table 15-3 Maximum continuous output current (575V drives) 249
Table 15-4 Maximum continuous output current (690V drives) 250

Index

Symbols

+10V user output 73
+24V external input 73
+24V user output 74

Numerics

0V common 73

A

AC supply contactor 58
AC supply requirements 54
Acceleration 85, 90, 116, 117, 121, 148
Access 19
Access Level 81
Accuracy 226
Acoustic noise 226
Advanced menus 79
Advanced parameters 134
Air-flow in a ventilated enclosure 39
Alarm 246
Alarm Indications 246
Altitude 225
Analog input 2 74
Analog input 3 74
Analog input objects 216
Analog output 1 74
Analog output 2 74
Analog output objects 216
Analog value objects 216
Autotune 118, 121

B

BACnet protocol implementation conformance statement 218
Basic requirements 112
Binary input objects 216
Binary output objects 217
Binary value objects 217
Braking 61
Braking Modes 209
Braking resistor values 230

C

Cable clearances 67
Cable lengths (maximum) 229
Cable size ratings 227
Cable types and lengths 59
Catch a spinning motor 213
Cautions 8
Control connections 72
Control terminal specification 73
Cooling 19
Cooling method 225
Current limits 122
Current loop gains 121
Current ratings 219

D

DC bus paralleling 55
DC bus voltage 61, 138, 209, 211, 212
Deceleration 61, 85, 90, 92, 116, 117, 121, 148, 205, 209, 211
Defaults (restoring parameter) 81
Derating 219
Destination parameter 72
Diagnostics 235
Digital I/O 1 75
Digital I/O 2 75
Digital I/O 3 75
Digital Input 1 75
Digital Input 2 75
Digital Input 3 75
Dimensions (overall) 227
Display 77
Display messages 80
Drive enable 75

E

Electrical Installation 51
Electrical safety 19
Electrical terminals 49
Electromagnetic compatibility (EMC) 19, 63, 231
EMC - Compliance with generic emission standards 68
EMC - General requirements 66
EMC - Variations in the wiring 69
EMC filter dimensions (external, overall) 234
EMC filter torque settings (external) 234
EMC filters (optional external) 232
Emission 231
EN61800-3 (standard for Power Drive Systems) 67
Enclosure 38
Enclosure Layout 38
Enclosure sizing 38
Environmental protection 19
External EMC filter 44

F

Fast Disable 213
Feedback device cable screening 67
Field weakening (constant power) operation 124
Fieldbus module category parameters 202
Fire mode 208
Fire protection 19
Fixed V/F mode 13
Fuse ratings 227
Fuse types 58

G

Getting Started 77
Ground connections 58, 66
Ground leakage 63
Grounding bracket 64
Grounding clamp 64

H

Hazardous areas 19
Heatsink mounted braking resistor 61
High speed operation 124
Humidity 225

I

I/O module category parameters 186
Input current ratings 227
Input inductor calculation 55
Internal EMC filter 65
Isolator switch 70
Items supplied with the drive 18

K

Keypad and display - fitting / removal 24
Keypad operating mode
    Auto 208
    Hand 208
    Off 208
Keypad operation 77

L

Line power supply loss modes 211
Line reactors 55, 225

M

Maximum speed / frequency 124
Mechanical Installation 19
Menu 0 79
Menu 01 - Frequency / speed reference 142
Menu 02 - Ramps 146
Menu 03 - Slave frequency, speed feedback and speed control 149
Menu 04 - Torque and current control 152
Menu 05 - Motor control 155
Menu 06 - Sequencer and clock 159
Menu 07 - Analogue I/O 161
Menu 08 - Digital I/O 164
Menu 09 - Programmable logic, motorized pot and binary sum 167
Menu 10 - Status and trips 171
Menu 11 - General drive set-up 173
Menu 12 - Threshold detectors and variable selectors 174
Menu 14 - User PID controller 180
Menu 15 and 16 - Solution Module set-up 185
Menu 17 - Building Automation Network 204
Menu 18 - Application menu 1 204
Menu 19 - Application menu 2 204
Menu 20 - Application menu 3 204
Menu 21 - Second motor parameters 205
Menu 22 - Additional Menu 0 set-up 206
Menu structure 78
Minimum connections to get the motor running in any operating mode 114
Mode parameter 72
Model number 13
Motor (running the motor) 112
Motor cable - interruptions 70
Motor isolator / disconnector-switch 70
Motor map parameters 118
Motor number of poles 118, 120
Motor operation 60
Motor rated current 118, 120
Motor rated frequency 118, 120
Motor rated power factor 118, 120
Motor rated speed 118, 120
Motor rated voltage 118, 120
Motor requirements 225
Motor thermal protection 123
Motor winding voltage 60
Mounting methods 25
Multiple motors 60

N

Nameplate description 14
NEMA rating 40, 226
Notes 8

O

Onboard PLC 131
Open loop mode 13
Open loop vector mode 13
Operating mode (changing) 81, 112
Operating modes 13
Optimisation 118
Options 16
Output contactor 61
Output frequency 226

P

Parameter access level 81
Parameter ranges 138
Parameter security 81
Planning the installation 19
Power dissipation 222
Power ratings 62, 219
Precision reference Analog input 1 73
Product information 9

Q

Quadratic V/F mode 13
Quick start commissioning 116, 131
Quick start connections 112

R

Ratings 10, 56
Reactor current ratings 55, 225
Reference modes 207
Relay contacts 75
Residual current device (RCD) 63
Resistances (minimum) 62
Resolution 226
RJ45 connector - connection details 71
Routine maintenance 50

S

Safety Information 8, 19
Saving parameters 81
Sealed enclosure - sizing 38
Serial comms lead 71
Serial communications look-up table 245
Single line descriptions 85
Slip compensation 119
SMARTCARD operation 125, 131
SMARTCARD trips 129
Solutions Module 185
Solutions Module - fitting / removal 24
Speed loop gains 122
Speed range 226
Start up time 226
Starts per hour 226
Status 80, 247
Status Indications 247
Stop modes 210
Storage 225
Supply requirements 225
Supply types 54
Surface mounting the drive 25
Surge immunity of control circuits - long cables and connections outside a building 70
Surge suppression for analog and bipolar inputs and outputs 71
Surge suppression for digital and unipolar inputs and outputs 71
Switching frequency 123

T

Technical data 219
Temperature 225
Terminal block in the enclosure 70
Terminal cover removal 19
Terminal sizes 49
Thermal protection circuit for the braking resistor 62
Through-panel mounting the drive 30
Torque modes 210
Torque settings 49, 230
Trip 235
Trip categories 246
Trip History 247
Trip Indications 235

U

UL Listing Information 249
User Security 82

V

Variable maximums 138
Vibration 226
Voltage mode 119

W

Warnings 8
Weights 227



0474-0000-02